1400N series

Momentary pushbutton switches • snap-in mounting • square plunger



DISTINCTIVE FEATURES

Butt action contacts, double break

Solder lug, straight PC and quick-connect terminals



ELECTRICAL SPECIFICATIONS

- Max. current/voltage rating with resistive load :
  - silver contacts (A) : 6 A 12 VDC
  - silver plated copper contacts (C) : 3 A 12 VDC
- Initial contact resistance : 10 mΩ
- Insulation resistance : 1,000 MΩ min. at 500 VDC
- Dielectric strength :
  1,500 Vrms 50 Hz min. between terminals
  2,000 Vrms 50 Hz min. between terminals and metal panel
- Electrical life : 10,000 cycles at full load

GENERAL SPECIFICATIONS

- Panel thickness : 2 mm (.078) max.
- Operating temperature : -20 °C to +55 °C (-4 °F to +131 °F)

MATERIALS

- Case : polyamide
- Plunger : polyamide
- Contacts :
  A : silver
  C : gold plated silver

APEM products may be recycled at end-of-life for the re-claiming of valuable metal components.

The company reserves the right to change specifications without notice.

1400N series

Momentary pushbutton switches •
snap-in mounting • square plunger

PANEL CUT-OUT

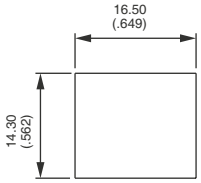

TERMINALS

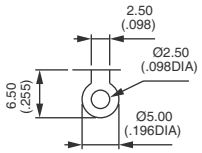

Solder lug

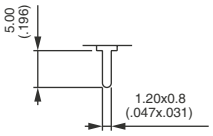

Straight PC

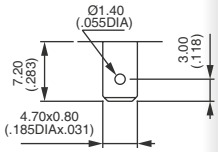

Quick-connect

ELECTRICAL FUNCTIONS

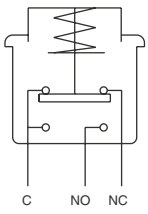

1400N series

Momentary pushbutton switches • snap-in mounting • square plunger

BUILD YOUR PART NUMBER

BASIC PART NUMBER

14	__	__	N
SERIES	TERMINALS	ELECTRICAL FUNCTIONS	MODEL

TERMINALS

1	Solder lug
4	Straight PC terminals
1../8	Quick-connect 4.7 x 0.8 (.185 x .031)

ELECTRICAL FUNCTIONS

2	NC
3	NO
5	Changeover

OPTIONS

CONTACT MATERIALS	PLUNGER COLORS

CONTACT MATERIALS

A	Silver
CD	Copper, silver plated

PLUNGER COLORS

2	Black
3	Green
6	Red
7	Ivory

ABOUT THIS SERIES

On the following pages, you will find successively basic part numbers of switches and options in the same order as in above chart.

Notice : please note that not all combinations of above numbers are available. Refer to following pages for further information.

1400N series

Momentary pushbutton switches • snap-in mounting • square plunger

SOLDER LUG TERMINALS



1412N	Normally Closed
1413N	Normally Open
1415N	Changeover

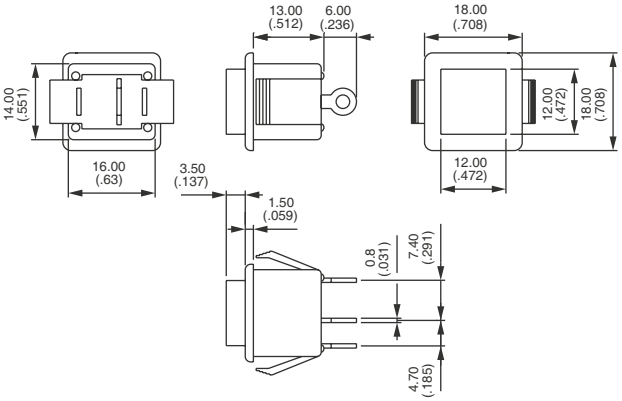

STRAIGHT PC TERMINALS



1442N	Normally Closed
1443N	Normally Open
1445N	Changeover

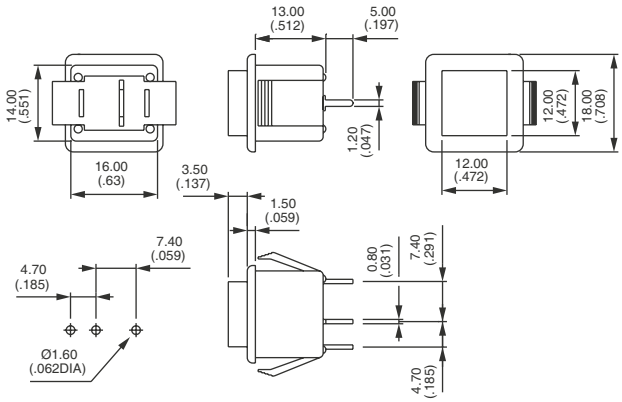

QUICK-CONNECT TERMINALS 4.7 X 0.8 (.185 X .031)



1412N/8	Normally Closed
1413N/8	Normally Open
1415N/8	Changeover

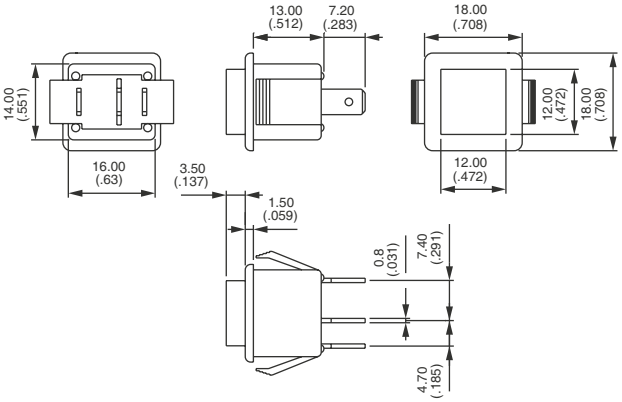

CONTACT MATERIALS

BASIC P/N

A	Silver
C	Copper, silver plated

1400N series

Momentary pushbutton switches • snap-in mounting • square plunger

PLUNGER COLORS

BASIC P/N



2	Black (standard)
3	Green
6	Red
7	Ivory

ⓘ Switch frame supplied in black.