bürkert
FLUID CONTROL SYSTEMS

Pressure Switch for neutral gases and liquids



- For neutral gases and liquids
- Models normally open contact, normally closed contact or changeover contact
- Switching point can be adjusted with grub screw

The pressure switch is used to convert adjustable pneumatic signals into electrical signals.

Technical data - NO normally open contact, AF19	
Material	Brass
Switching function	Normally open contact
Setting range	1 - 10 bar
Bursting pressure	20 bar
Medium	Air
Medium temperature	- 25 to + 85 °C
Diaphragm	NBR, other on request
Switch-back difference	10 to 15 %
Switching frequency	max. 200/min.
Mechanical life	10^6
Reference voltage	max. 42 V
Maximum load	max. 2 A
Protection class	IP00 (IP20, with protection cap)

Technical data - NO normally open contact / NC normally closed contact / changeover contact, AF24				
Material	Galvanised steel, stainless steel, brass			
Switching function	Normally open contact, normally closed contact or changeover contact			
Setting range	0.5 … 2 bar	1 … 10 bar	10 … 70 bar	50 … 200 bar
Bursting pressure	10 bar	20 bar	120 bar	300 bar
Design	Spring-loaded diaphragm		Spring-loaded piston	
Diaphragm[1] or seal[2]	NBR[1]		UR[2]	
Medium	Air, hydraulic oil, oil emulsion, water			
Medium temperature	- 25 to + 85 °C			
Switch-back difference	15 to 25 %			
Switching frequency	max. 200/min.			
Mechanical life	10^6			
Reference voltage	max. 42 V			
Maximum load	max. 2 A			
Protection class	IP00 (IP20, with protection cap)			

DTS 1000264997 EN Version: D Status: RL (released | freigegeben | validé) printed: 20.02.2018

Technical data - Changeover contact, flange mounting				
Material	Galvanised steel, stainless steel, brass			
Switching function	Changeover contact			
Setting range	0.3 - 2 bar	1 - 10 bar	1 - 70 bar	50 - 200 bar
Bursting pressure	20 bar	20 bar	250 bar	300 bar
Design	Spring-loaded diaphragm		Spring-loaded piston	
Diaphragm[1]or seal[2]	NBR[1]		UR[2]	
Medium	Air, hydraulic oil, oil emulsion, water			
Medium temperature	- 25 to + 85 °C			
Switch-back difference	15 to 25 %			
Switching frequency	max. 200/min.			
Mechanical life	10^6			
Reference voltage	max. 150 V			
Protection class	IP65 cable plug type 250			

Function

NO normally open contact

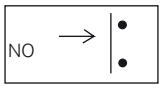

NC normally closed contact

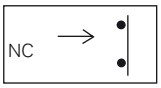

Changeover contact

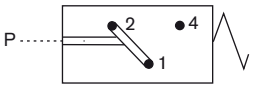

Dimensions [mm]

AF19
NO normally open contact

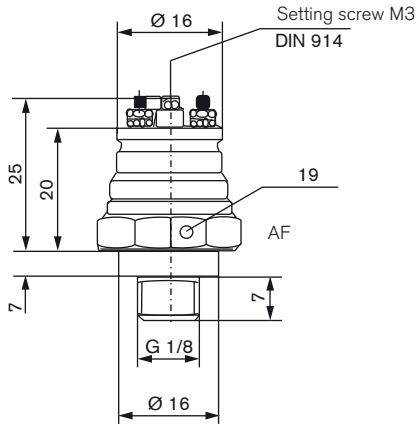

AF24
NO normally open contact / NC normally closed contact / changeover contact

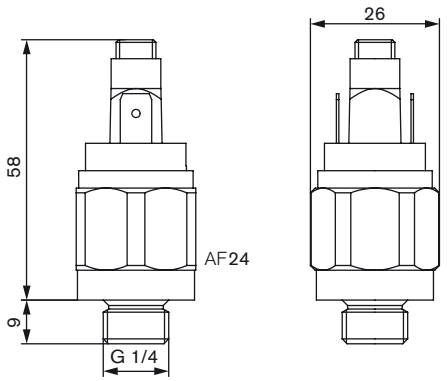

Flange mounting, changeover contact

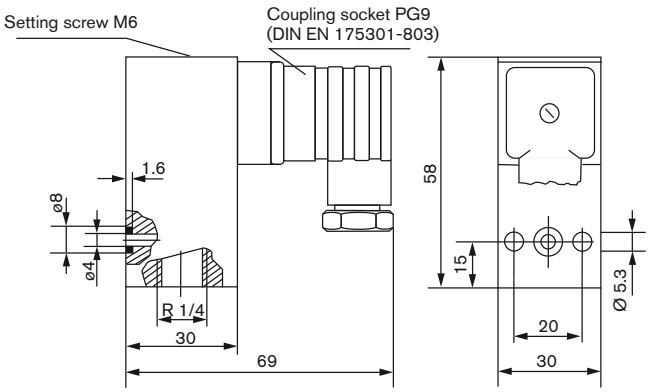

DTS 1000264997 EN Version: D Status: RL (released | freigegeben | validé) printed: 20.02.2018

Ordering chart pressure switch

Size	Version	Setting range	Article no.
AF19	NO - normally open contact	1 ... 10 bar	780494
AF24	NO - normally open contact	0.5 ... 2 bar	772503
		1 ... 10 bar	780496
		10 ... 70 bar	787283
		50 ... 200 bar	787284
	NC - normally closed contact	0.5 ... 2 bar	772500
		1 ... 10 bar	780495
		10 ... 70 bar	787286
		50 ... 200 bar	787287
	Changeover contact	0.5 ... 2 bar	772506
		1 ... 10 bar	772515
		10 ... 70 bar	772524
		50 ... 200 bar	772536
Flange mounting	Changeover contact	0.3 ... 2 bar	784230
		1 ... 10 bar	780499
		10 ... 70 bar	787289
		50 ... 200 bar	787290

Others versions on request

Ordering chart accessories for pressure switch

Version	Article no.
Protection cap for AF19 switch	780498
Protection cap for AF24 switch	780497
Cable plug Type 2508 for flange mounting switch	008526

DTS 1000264997 EN Version: D Status: RL (released | freigegeben | validé) printed: 20.02.2018

To find your nearest Bürkert facility, click on the orange box → www.burkert.com

In case of special application conditions, please consult for advice.

We reserve the right to make technical changes without notice.
© Christian Bürkert GmbH & Co. KG

1802/3_EU-en_00895294