O5S500

Through-beam sensor transmitter

O5S-OOKG/US100

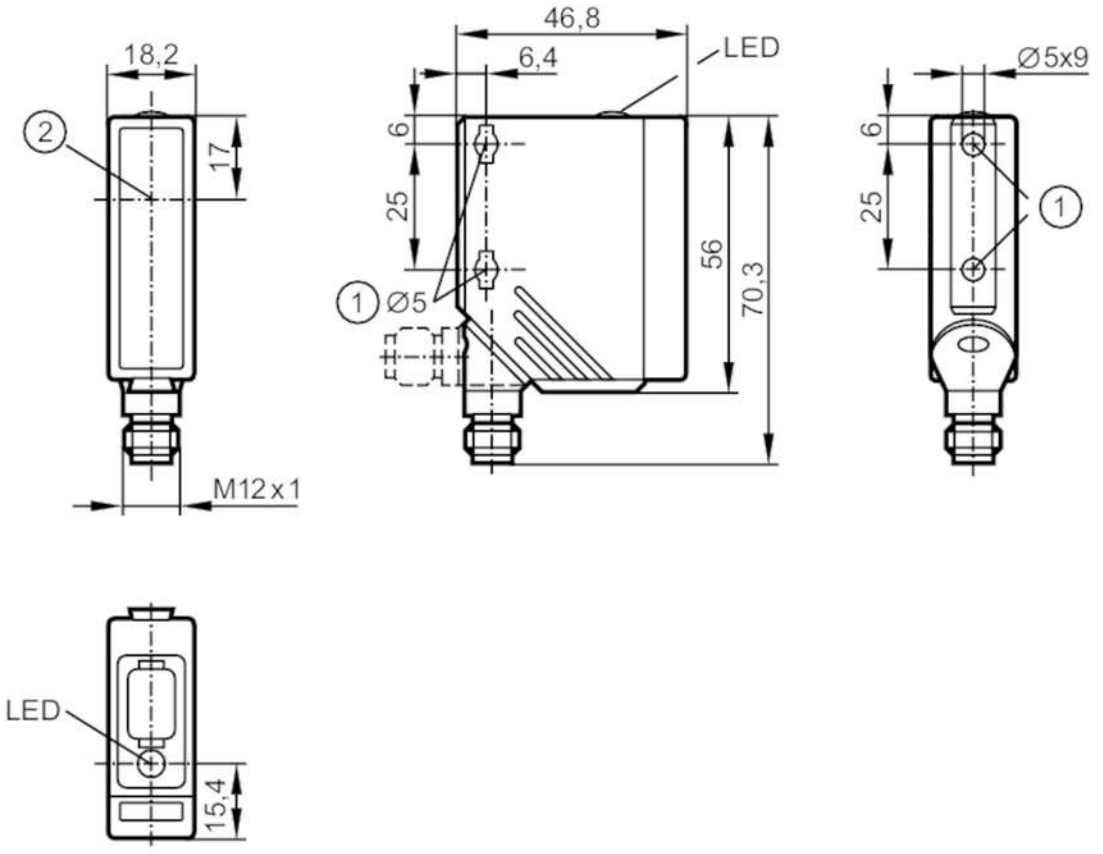

1 When a M5 mounting screw is used, the max. tightening torque is 2 Nm.
2 light emission

Product characteristics		
Type of light		red light
Housing		rectangular
Application		
Function principle		Through-beam sensor
Electrical data		
Operating voltage	[V]	10...36 DC
Current consumption	[mA]	20
Protection class		II
Reverse polarity protection		yes
Type of light		red light
Wave length	[nm]	624
Detection zone		
Transmitter / receiver		transmitter
Range	[m]	< 25
Range adjustable		no
Max. light spot diameter	[mm]	625
Light spot dimensions refer to		at maximum range

O5S500

Through-beam sensor transmitter

O5S-OOKG/US100

Operating conditions			
Ambient temperature	[°C]	-25...60	
Protection		IP 67	
Tests / approvals			
EMC		EN 60947-5-2	
MTTF	[years]	617	
Mechanical data			
Weight	[g]	65.5	
Housing		rectangular	
Dimensions	[mm]	56 x 18.2 x 46.8	
Materials		housing: PA; bezel: stainless steel; operator interface: TPU	
Lens material		PMMA	
Lens alignment		side lens	
Displays / operating elements			
Display		operation	1 x LED, green
Remarks			
Remarks		operating voltage "supply class 2" according to cULus	
Pack quantity		1 pcs.	

Electrical connection

Connector: 1 x M12; coding: A



Connection

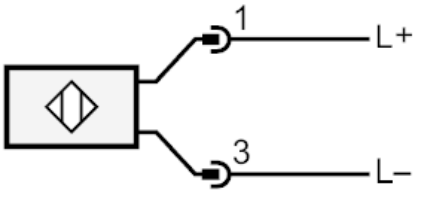

O5S500

Through-beam sensor transmitter

O5S-OOKG/US100

Diagrams and graphs

excess gain graph

