SCHMERSAL

EN Operating instructions. . . . . .pages 1 to 12
Original

Content

1 About this document
1.1 Function 1
1.2 Target group: authorised qualified personnel 1
1.3 Explanation of the symbols used 1
1.4 Appropriate use 2
1.5 General safety instructions 2
1.6 Warning about misuse 2
1.7 Exclusion of liability 2

2 Product description
2.1 Ordering code 2
2.2 Special versions 2
2.3 Destination and use 2
2.4 Technical data 3
2.5 Derating 3
2.6 Safety classification of semi-conductor output 3

3 Mounting
3.1 General mounting instructions 3
3.2 Dimensions 3

4 Electrical connection
4.1 General information for electrical connection 3
4.2 Coding of connecting terminals 4

5 Operating principle and settings
5.1 Description of the terminals and LED indications 4
5.2 Adjustable applications 5
5.3 Changing setting or application 6

6 Diagnostic
6.1 LED indications 7
6.2 Malfunctions 7

7 Wiring examples
7.1 Possible applications 7
7.2 Application example 8
7.3 Start configuration SRB-E-204ST 9
7.4 Feedback circuit SRB-E-204ST 9
7.5 Cascading SRB-E-204PE 9
7.6 Sensor configuration 9

8 Set-up and maintenance
8.1 Commissioning 10
8.2 Functional testing 10
8.3 Behaviour in the case of faults 10
8.4 Setting report 11
8.5 Maintenance 11

9 Disassembly and disposal
9.1 Disassembly 11
9.2 Disposal 11

10 Appendix
10.1 Wiring/circuit information 11

11 EU Declaration of conformity

1. About this document

1.1 Function

This operating instructions manual provides all the information you need for the mounting, set-up and commissioning to ensure the safe operation and disassembly of the safety-monitoring module. The operating instructions must be available in a legible condition and a complete version in the vicinity of the device.

1.2 Target group: authorised qualified personnel

All operations described in this operating instructions manual must be carried out by trained specialist personnel, authorised by the plant operator only.

Please make sure that you have read and understood these operating instructions and that you know all applicable legislations regarding occupational safety and accident prevention prior to installation and putting the component into operation.

The machine builder must carefully select the harmonised standards to be complied with as well as other technical specifications for the selection, mounting and integration of the components.

1.3 Explanation of the symbols used

Information, hint, note:
This symbol is used for identifying useful additional information.

Caution: Failure to comply with this warning notice could lead to failures or malfunctions.
Warning: Failure to comply with this warning notice could lead to physical injury and/or damage to the machine.

x.000 / 09.2021 / v.A. - 103010755-EN / D / 2021-09-17 / AE-Nr. 14043

1.4 Appropriate use

The products described in these operating instructions are developed to execute safety-related functions as part of an entire plant or machine. It is the responsibility of the manufacturer of a machine or plant to ensure the correct functionality of the entire machine or plant.

The safety-monitoring module must be exclusively used in accordance with the versions listed below or for the applications authorised by the manufacturer. Detailed information regarding the range of applications can be found in the chapter "Product description".

1.5 General safety instructions

The user must observe the safety instructions in this operating instructions manual, the country-specific installation standards as well as all prevailing safety regulations and accident prevention rules.

Further technical information can be found in the Schmersal catalogues or in the online catalogue on the Internet: products.schmersal.com.

The information contained in this operating instructions manual is provided without liability and is subject to technical modifications.

There are no residual risks, provided that the safety instructions as well as the instructions regarding mounting, commissioning, operation and maintenance are observed.

1.6 Warning about misuse

In case of inadequate or improper use or manipulations of the safety-monitoring module, personal hazards or damage to machinery or plant components cannot be excluded.
The relevant requirements of the standards ISO 14119 and ISO 13850 must be observed.

1.7 Exclusion of liability

We shall accept no liability for damages and malfunctions resulting from defective mounting or failure to comply with this operating instructions manual. The manufacturer shall accept no liability for damages resulting from the use of unauthorised spare parts or accessories.

For safety reasons, invasive work on the device as well as arbitrary repairs, conversions and modifications to the device are strictly forbidden; the manufacturer shall accept no liability for damages resulting from such invasive work, arbitrary repairs, conversions and/or modifications to the device.

The safety relay module is to be operated in an area in which access by personnel is restricted.

2. Product description

2.1 Ordering code

This operating instructions manual applies to the following types:

SRB-E-204ST-①
SRB-E-204PE-①

No.	Option	Description
①		Plug-in screw clamps: single wire (rigid) or fine wire (flexible): 0.2 … 2.5 mm²; fine wire with ferrule: 0.25 … 2.5 mm²
	CC	Plug-in cage clamps: single wire (rigid) or fine wire (flexible): 0.2 … 1.5 mm²; fine wire with ferrule: 0.25 … 1.5 mm²

Only if the action described in these operating instructions is carried out correctly will the safety function be safeguarded, including compliance with the Machinery Directive.

2.2 Special versions

For special versions, which are not listed in the order code below 2.1, these specifications apply accordingly, provided that they correspond to the standard version.

2.3 Destination and use

The safety-monitoring modules for integration in safety circuits are designed for fitting in control cabinets. They are used for the safe evaluation of the signals of positive break position switches or safety sensors for safety functions on sliding, hinged and removable safety guards as well as emergency stop control devices, safety solenoid switches and AOPD's.

The safety function is defined as deactivating outputs Q1,Q2 when inputs S12/S22, S32/S42, S52/S62 and S72/S82 are opened.
Taking account of a PFH value assessment, the safety-relevant current paths meet the following requirements (see also chapter 2.6 “Safety classification”)
- Control category 4 - PL e to ISO 13849-1
- SIL 3 to IEC 61508
- SILCL 3 to IEC 62061

Safety outputs Q1 and Q2 of input extension SRB-E-204PE must be processed further by means of a fail-safe sequential circuit. Start and reset function as well as feedback circuit monitoring must be realised with the sequential circuit.

To determine the Performance Level (PL) to ISO 13849-1 of the entire safety function (e.g. sensor, logic, actuator), an assessment of all relevant components is required.

The entire concept of the control system in which the safety component is integrated, must be validated to the relevant standards.

2.4 Technical data

General data

Standards:	EN 60204-1, IEC 60947-5-1; ISO 13849-1, IEC 62061, IEC 61508
EMC rating:	to EMC Directive
Air clearances and creepage distances:	to IEC 60664-1
Mounting:	standard DIN rail to EN 60715
Terminal designations:	IEC 60947-1
Electrical characteristics:	
Rated operating voltage U_e:	24 VDC –20%/+20%, residual ripple max. 10%
Mains unit/mains power supply:	SELV network as per EN 60950; mains power supply must harmonise with device safety (characteristic/melting property) so that triggering is assured.
Power consumption:	3 W (+ load of the safety outputs)
Fuse rating for the operating voltage:	we recommend a circuit breaker type Z (max. 16 A) or a fine fuse (max. 15 A, delayed action)
UL Rating of external fuse:	max. 16 A, only use fuses in accordance with UL 248 series
Insulation values to IEC 60664-1:	
- Rated insulation voltage U_i:	50 V
- Rated impulse withstand voltage U_{imp}:	0.8 kV
- Overvoltage category:	III
- Degree of pollution:	2
Pull-in delay:	< 150 ms
Drop-out delay in case of "emergency stop":	< 10 ms
Drop-out delay on "supply failure":	< 10 ms
Bridging in case of voltage drops:	typ. 5 ms
Readiness after switching on voltage [s]:	< 1.5 sec.
Control current circuits/inputs:	
Inputs S12, S22:	24 VDC/8 mA
Inputs X2, X3, X7:	24 VDC/8 mA
Clock outputs S11, S21:	> 20 VDC, 10 mA per output
Cable length:	1500 m with 1.5 mm²; 2500 m with 2.5 mm²
Conduction resistance:	max. 40 Ω
Semi-conductor outputs:	
Switching capacity of the safety outputs Q:	max. 2 A
Voltage drop:	< 0.5 V
Leakage current:	< 1 mA
Max. fuse rating of the safety outputs:	refer to "Operating voltage"
Test impulse to Q1, Q2:	< 1 ms (negative) < 100 µs (positive)
Utilisation category to IEC 60947-5-1:	DC-13: 24 V / 2A
Switching capacity of signaling outputs:	semi-conductor outputs Y1-Y4: 24 VDC/100 mA
Fuse rating of the signalling outputs:	internal electronic trip, tripping current > 100 mA
Max. switching cycles / minute:	60
Inductive consumers:	provision is to be made for suitable protective wiring for suppression
Mechanical data:	
Connection type:	refer to 2.1
Cable section:	refer to 2.1
Connecting cable:	rigid or flexible
Tightening torque for the terminals:	0.5 Nm
Material of enclosure:	glass-fibre reinforced thermoplastic, ventilated
Weight:	150 g
Ambient conditions:	
Ambient temperature:	–25°C … +60°C (non condensing)
Storage and transport temperature:	–40°C … +85°C (non condensing)
Protection class:	Enclosure: IP40, Terminals: IP20, Clearance: IP54
Resistance to shock:	30 g / 11 ms
Resistance to vibrations to EN 60068-2-6:	10 ... 55 Hz, amplitude 0.35 mm
Altitude:	max. 2,000 m

2.5 Derating

No derating with individual installation of modules.
Derating on request if several modules are installed one after the other without spacing and with maximum output load and ambient temperatures.

2.6 Safety classification of semi-conductor output

Standards:	ISO 13849-1, IEC 61508, IEC 62061
PL:	e
Control Category:	4
PFH_D:	≤ 2.66 x 10^{-9} / h
PFD_{avg}:	≤ 2.42 x 10^{-5}
SIL:	suitable for SIL 3 applications
Service life:	20 years

3. Mounting

3.1 General mounting instructions

Mounting: snaps onto standard DIN rails to EN 60715.

Hook bottom of enclosure in DIN rail and push down until it engages in position.

3.2 Dimensions

All measurements in mm.
Device dimensions (H/W/D): 98 x 22.5 x 115 mm

4. Electrical connection

4.1 General information for electrical connection

The electrical connection may only be carried out by authorised personnel in a de-energised condition.

If mains unit is a new installation or a replacement, the connector of the output level must be removed and correct connection of the power supply (A1) must be checked.

To avoid EMC disturbances, the physical ambient and operational conditions at the place where the product is installed, must meet the provisions laid down in the paragraph "Electromagnetic Compatibility (EMC)" of EN 60204-1.

4.2 Coding of connecting terminals

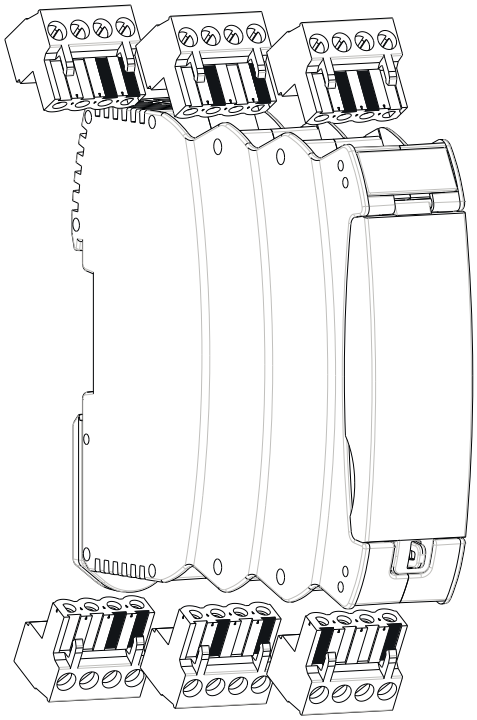

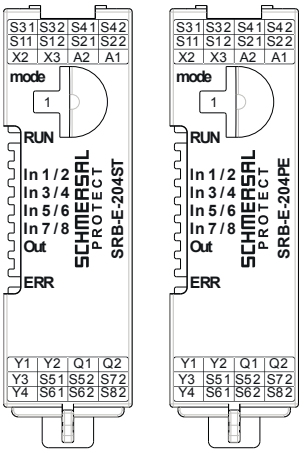

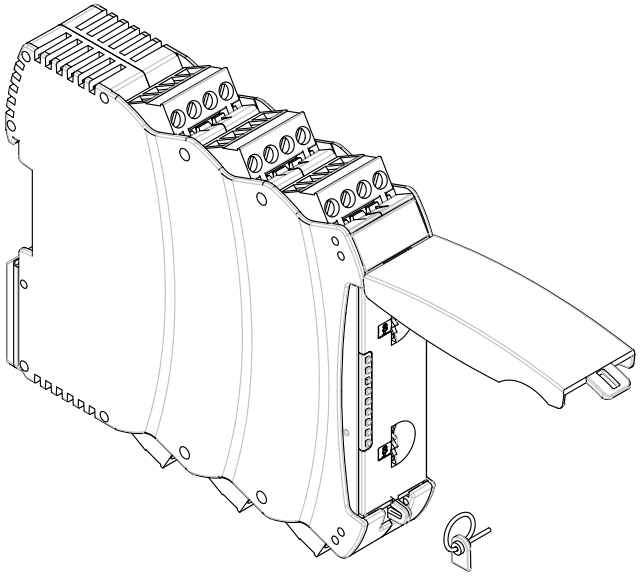

5. Operating principle and settings

5.1 Description of the terminals and LED indications

Pin	Function	LED	Function
A1	Operating voltage + 24 VDC	**RUN**	Operating voltage OK RUN mode For flash code, see section 6.1
A2	Operating voltage 0 V		
		ERR	Error code refer to part 6.2
X2	Input of start circuit / cascading		
X3	Input feedback circuit / Cascading		
S11/S21 **S31/S41** **S51/S61**	Test pulse outputs		
S12 **S22**	Input channel 1 Input channel 2	**In 1/2**	High level at S12/S22 For flash code, see section 6.1
S32 **S42**	Input channel 1 Input channel 2	**In 3/4**	High level at S32/S42 For flash code, see section 6.1
S52 **S62**	Input channel 1 Input channel 2	**In 5/6**	High level at S52/S62 For flash code, see section 6.1
S72 **S82**	Input channel 1 Input channel 2	**In 7/8**	High level at S72/S82 For flash code, see section 6.1
Y1	Signalling output (NO), sensor 1		
Y2	Signalling output (NO), sensor 2		
Y3	Signalling output (NO), sensor 3		
Y4	Signalling output (NO), sensor 4		
Q1/Q2	Safety outputs	**Out**	Outputs activated For flash code, see section 6.1

Adjustment of application using rotary “mode” switch

- Open front transparent cover (see fig.).
- Opening is carried out by lifting side with lock.
- Select desired application using rotary mode switch (1 … 10) by turning up or down (see 5.3).
- After performing setting, close front cover again.
- Front cover can be secured with a lead seal to protect it from being opened unintentionally

⚠ Only touch the components after electrical discharge!

5.2 Adjustable applications

SRB-E-204ST

Rotary knob position	Reset button (detection of the trailing edge)	Cross-wire monitoring active	Sensor	Input / Sensor configuration	Monitoring of sensor channels for synchronisation (< 5 sec.)
1	Yes	Yes	1 – 4	NC / NC	Yes
2	Yes	Yes	1 – 4	NC / NC	No
3	Yes	No	1 – 4	NC / NC	Yes
4	Yes	No	1 – 4	NC / NC	No
5	Yes	Yes	1 – 4	NC / NO	Yes
6	Autostart	Yes	1 – 4	NC / NO	No
7	Autostart	Yes	1 – 4	NC / NC	Yes
8	Autostart	Yes	1 – 4	NC / NC	No
9	Autostart	No	1 – 4	NC / NC	Yes
10	Autostart	No	1 – 4	NC / NC	No
11	Yes	Yes Yes No No	1 2 3 4	NC / NC	No
12	Autostart	Yes Yes No No	1 2 3 4	NC / NC	No
13	Yes	Yes Yes Yes No	1 2 3 4	NC / NC	No
14	Autostart	Yes Yes Yes No	1 2 3 4	NC / NC	No
C	**Configuration mode**				

SRB-E-204PE

Rotary knob position	Reset button (detection of the trailing edge)	Cross-wire monitoring active	Sensor	Input / Sensor configuration	Monitoring of sensor channels for synchronisation (< 5 sec.)
1	---	Yes	1 – 4	NC / NC	Yes
2	---	Yes	1 – 4	NC / NC	No
3	---	No	1 – 4	NC / NC	Yes
4	---	No	1 – 4	NC / NC	No
5	---	Yes	1 – 4	NC / NO	Yes
6	---	Yes	1 – 4	NC / NO	No
7	---	Yes No No No	1 2 3 4	NC / NC	No
8	---	Yes Yes No No	1 2 3 4	NC / NC	No
9	---	Yes Yes Yes No	1 2 3 4	NC / NC	No
C	**Configuration mode**				

5.3 Changing setting or application

Description / procedure	Rotary (mode) switch	System response	LED indications			
			RUN	In 1	In 2	Out
Factory setting	Position 1	Ready for application 1	-	-	-	-
Switch operating voltage on	Position 1	Without connected sensors!	Lights up	-	-	-
	Turn to position C	Application 1 is deleted	Lights up	Flashes	Flashes	Flashes
Setting cycle active		Application 1 is deleted	-	-	-	-
		No valid application stored	Flashes	-	-	-
SRB-E ready for new applications						
Select new application	Select desired application (1-11)	New application will be loaded	Lights up	-	-	-
Setting cycle active			Lights up	Lights up	-	-
			Lights up	Lights up	Lights up	-
			Lights up	Lights up	Lights up	Lights up
Ready for operation	The desired application is configured	Adopt new application	Lights up	-	-	-
Switch off operating voltage and connect wires according to selected application -> SRB-E... ready for operation						

6. Diagnostic

6.1 LED indications

LED	Function	Display type
RUN	Ready for operation	Continuously lit
	Not a valid application	Flashes
In 1/2	Inputs S12 and S22 closed	Continuously lit
	Time window for synchronicity exceeded	Flashes quickly
	Second channel has not opened	Flashes slowly
In 3/4	Inputs S32 and S42 closed	Continuously lit
	Time window for synchronicity exceeded	Flashes quickly
	Second channel has not opened	Flashes slowly
In 5/6	Inputs S52 and S62 closed	Continuously lit
	Time window for synchronicity exceeded	Flashes quickly
	Second channel has not opened	Flashes slowly
In 7/8	Inputs S72 and S82 closed	Continuously lit
	Time window for synchronicity exceeded	Flashes quickly
	Second channel has not opened	Flashes slowly
Out	Safety outputs ON	Continuously lit
	SRB-E-204ST	
	Safety outputs waiting for start (input X2)	Flashes slowly
	Feedback circuit not closed (input X3)	Flashes slowly
	SRB-E-204PE	
	Safety outputs waiting for input signals X2 and X3	Flashes quickly

Single flashing of all LEDs with mains on

6.2 Malfunctions

Malfunctions and fault causes are displayed with the ERR-LEDs via short and long flashing signals

LED	Error cause	Long flash	Short flash
ERR	Operating voltage too low	1	1
	Operating voltage too high	1	2
	Invalid rotary switch setting	1	3
	External voltage on output Q1	1	5, 7, 9
	External voltage on output Q2	1 2	6, 8 1
	Termination to GND on output Q1	2	2
	Termination to GND on output Q2	2	3
	Cross-wire between inputs S12 and S22	2	4
	Cross-wire between inputs S32 and S42	2	5
	Cross-wire between inputs S52 and S62	2	6
	Cross-wire between inputs S72 and S82	2	7
	Undefined level on outputs:		
	X2	3	4
	X3	3	5
	S12	2	9
	S22	3	1
	S32	3	2
	S42	3	3
	S52	3	6
	S62	3	7
	S72	3	8
	S82	3	9
	Rotary switch > 30 sec. to position C	6	8
	Application changed and activation of operating voltage	LEDs flash quickly: RUN, In 1/2, In 3/4, In 5/6, In 7/8, Out	
	Application was changed during active operation	LEDs flash quickly: ERR, In 1/2, In 3/4, In 5/6, In 7/8, Out	
	Other fault codes: Consult technical sales dept. at Schmersal		

7. Wiring examples

7.1 Possible applications

All applications for 1 or 2-channel safe evaluation for protective equipment as follows:

- Safety door monitoring to ISO 14119
- Position switches with positive break to IEC 60947-5-1
- Safety sensors to IEC 60947-5-3
- Emergency stop command devices to ISO 13850 and IEC 60947-5-5
- Magnetic safety sensors to IEC 60947-5-3
- Safety light curtain and photoelectric barriers according to IEC 61496

The connection of magnetic safety switches to the SRB-E-... safety-monitoring module is only admitted when the requirements of the standard IEC 60947-5-3 are observed.

As the technical data are regarded, the following minimum requirements must be met:
- Switching capacity: min. 240 mW
- Switching voltage: min. 24 VDC
- switching current: min. 10 mA

For example, the following safety sensors meet the requirements:
- BNS 36-02Z(G), BNS 36-02/01Z(G)
- BNS 260-02Z(G), BNS 260-02/01Z(G)

When sensors with LED are wired in the control circuit (protective circuit), the following rated operating voltage must be observed and respected:
- 24 VDC with a max. tolerance of –5%/+20%

Otherwise availability problems could occur, especially in series-wired sensors, where a voltage drop in the control circuit is triggered by LED's for instance.

7.2 Application example

Dual-channel control, shown for a guard door monitor with two position switches where one has a positive break contact; with external reset button Ⓡ

- Relay outputs: Suitable for 2-channel control, for increase in capacity or number of contacts by means of contactors or relays with positive-guided contacts
- H2 = Feedback circuit

Signalling outputs must not be used in safety circuits.

Wiring example SRB-E-204ST

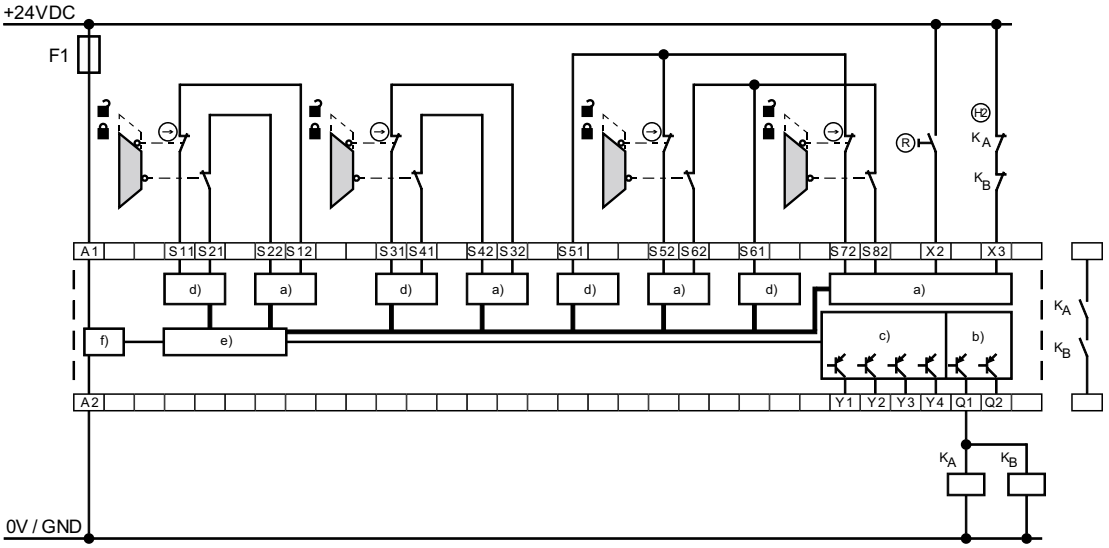

Wiring example SRB-E-204PE

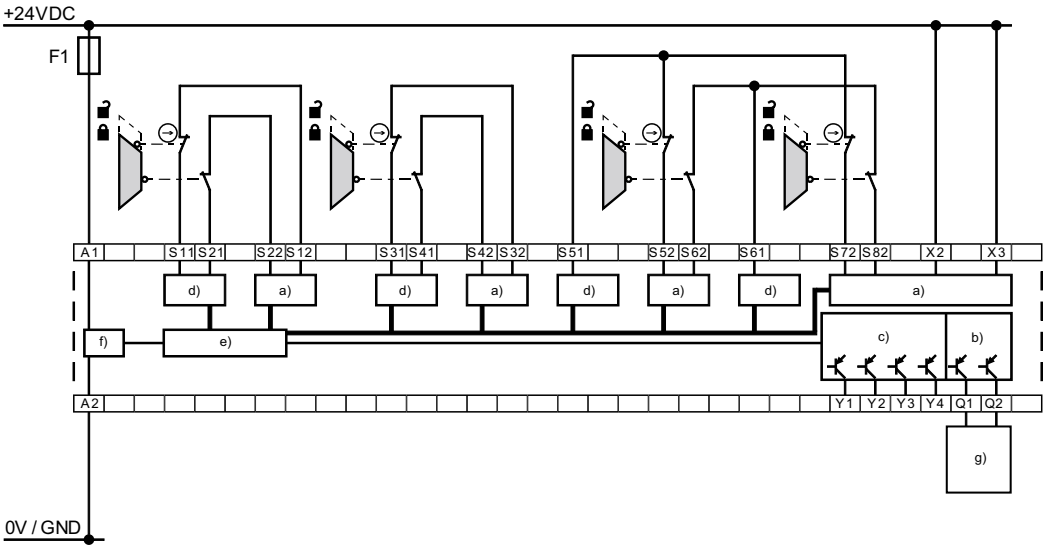

Key

a) Safety inputs
b) Safety outputs
c) Signalling outputs
d) Clock outputs
e) Processing
f) Power
g) Safety modules
Safe signal processing, e.g. by PROTECT SRB-E-series with start and reset functions as well as feedback circuit monitoring.

7.3 Start configuration SRB-E-204ST

7.3.1 Monitored start

- Manual start or activation of the module occurs when the button is released.

Monitoring of max. actuation time 0.03 sec. … 3 sec.
If the time is exceeded, the module cannot be started!

7.3.2 Reset without monitoring / autostart

- The manual start or the activation of the module occurs when the button is pressed (not when it is released!).
- With autostart, X2 must be bridged to +24 VDC

Not admitted without additional measure due to the risk of gaining access by stepping behind!

Within the meaning of IEC/EN 60204-1 paragraph 9.2.5.4.2 the operating mode "automatic start" is only restrictedly admissible. In particular, any inadvertent restart of the machine must be prevented by other suitable measures.

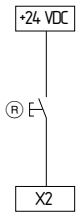

Reset button (detection of the trailing edge)	Reset without monitoring / autostart
Rotary knob position 1	Rotary knob position 6
Rotary knob position 2	Rotary knob position 7
Rotary knob position 3	Rotary knob position 8
Rotary knob position 4	Rotary knob position 9
Rotary knob position 5	Rotary knob position 10
Rotary knob position 11	Rotary knob position 12
Rotary knob position 13	Rotary knob position 14

7.4 Feedback circuit SRB-E-204ST

- Suitable for increase in capacity or number of contacts by means of contactors or relays with positive-guided contacts. If the feedback circuit is not required, establish a bridge.

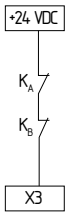

7.5 Cascading SRB-E-204PE

- Safety inputs X2 and X3 can be used for cascading of several SRB-E-204PE modules.
- Without cascading, inputs X2 and X3 must be bridged to +24 VDC.

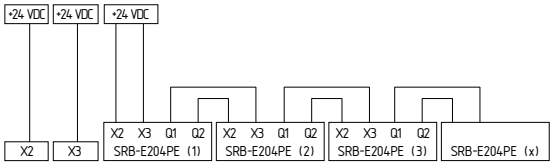

7.6 Sensor configuration

- Different protective equipment can be monitored.

See examples as follows

- Sequence of protective equipment can be chosen freely
- Unrequired inputs S12, S22, S32, S42, S52, S62, S72, S82 must be bridged to outputs S11, S21, S31, S41, S51, S61.

Single channel signal processing (Sensor 1 – 4)

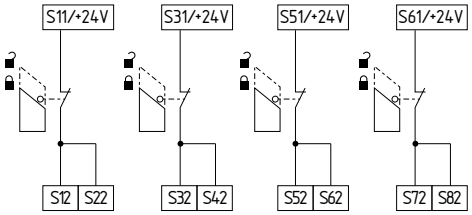

Rotary knob position	Function (SRB-E-204ST)
4	Reset button (detection of the trailing edge)
10	Reset without monitoring / autostart

Dual channel signal processing NC / NC (Sensor 1 – 4)

With cross-wire monitoring

(Category 4 – PL e to ISO 13849-1 possible)

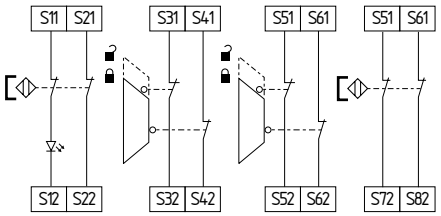

Rotary knob position	Cross-wire monitoring	Synchronisation
1	Yes	Yes
2	Yes	No
7 (SRB-E-204ST)	Yes	Yes
8 (SRB-E-204ST)	Yes	No

Differentiated cross-fault monitoring of sensors
(Category 4 – PL e to ISO 13849-1 possible)

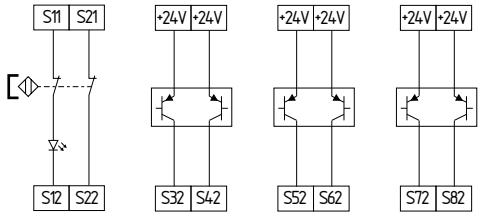

Rotary knob position	Type / function
7	SRB-E-204PE

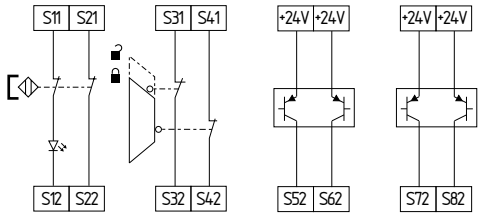

Rotary knob position	Type / function
8	SRB-E-204PE
11	SRB-E-204ST Reset button with detection of the trailing edge
12	SRB-E-204ST Autostart

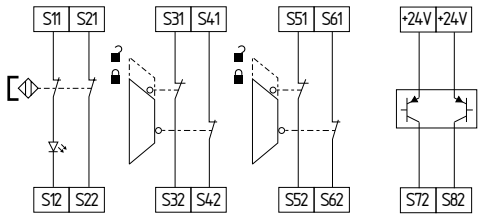

Rotary knob position	Type / function
9	SRB-E-204PE
13	SRB-E-204ST Reset button with detection of the trailing edge
14	SRB-E-204ST Autostart

Without cross-wire monitoring (Sensor 1 – 4)
(Cat. 4 - PL e to ISO 13849-1 only possible with protective wiring)

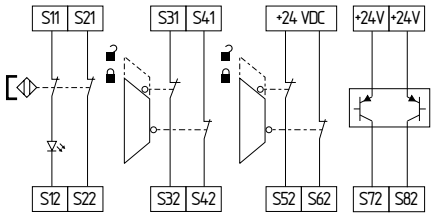

- Unrequired inputs S12, S22, S32, S42, S52, S62, S72, S82 must be switched to +24VDC or bridged to outputs S11, S21, S31, S41, S51, S61.

Rotary knob position	Cross-wire monitoring	Synchronisation
3	No	Yes
4	No	No
9 (SRB-E-204ST)	No	Yes
10 (SRB-E-204ST)	No	No

Dual channel signal processing NC / NO (Sensor 1 – 4)
(Category 4 – PL e to ISO 13849-1 possible)

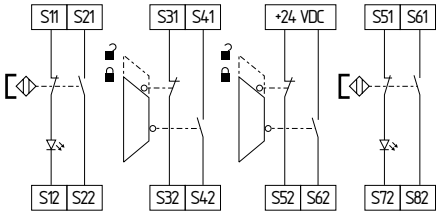

- Unrequired inputs S12, S32, S52, S72 must be switched to +24VDC or bridged to outputs S11, S21, S31, S41, S51, S61.

Rotary knob position	Function (SRB-E-204ST)
5	Reset button (detection of the trailing edge)
6	Reset without monitoring / autostart

8. Set-up and maintenance

8.1 Commissioning

The safety relay module features protection class IP54 for installation in a switch cabinet.

The safety relay module is delivered ready for operation.
Application 1 is preset in the factory.

8.2 Functional testing

The safety function of the safety-monitoring module must be tested.
The following conditions must be previously checked and met:
1. Correct fixing
2. Check the integrity of the cable entry and connections
3. Check the safety-monitoring module's enclosure for damage
4. Check the electrical function of the connected sensor technology and their influence on the safety-monitoring module and the downstream actuators

The safety relay module features self-test functions.
If a fault is detected, the system adopts a safe mode and leads, if necessary, to undelayed deactivation of all safety outputs.

8.3 Behaviour in the case of faults

In the event of a fault the following procedure is recommended:
1. Identify faults according to flash codes from chapter 6.2.
2. Rectify the fault if it is described in the table.
3. Switch operating voltage off and on and erase fault mode.

If fault could not be rectified, please contact the manufacturer.

8.4 Setting report

This report regarding the setting of the device must be completed accordingly by the customer and enclosed in the technical documentation of the machine.

The setting report must be available whenever a safety check is performed.

Company: _____

The safety-monitoring module is used in the following machine:

_____	_____	_____
Machine n°	Machine type	Module n°

Configured application (mode): _____

_____	_____
Set on (date)	Signature of the responsible person

8.5 Maintenance

A regular visual inspection and functional test, including the following steps, is recommended:

1. Check the correct fixing of the safety-monitoring module
2. Check the cable for damages
3. Check electrical function

If a manual functional check is necessary to detect a possible accumulation of faults, then this must take place during the intervals noted as follows:

- at least every month for PL e with category 3 or category 4 (according to ISO 13849-1) or SIL 3 with HFT (hardware fault tolerance) = 1 (according to IEC 62061);
- at least every 12 months for PL d with category 3 (according to ISO 13849-1) or SIL 2 with HFT (hardware fault tolerance) = 1 (according to IEC 62061).

Damaged or defective components must be replaced.

9. Disassembly and disposal

9.1 Disassembly

The safety-monitoring module must be disassembled in a de-energised condition only.

9.2 Disposal

The safety-monitoring module must be disposed of in an appropriate manner in accordance with the national prescriptions and legislations.

10. Appendix

10.1 Wiring/circuit information

Use of safety outputs Q1, Q2

Safety outputs Q1, Q2 are to be used for safety-orientated signal processing.

SRB-E-204PE:

To realise additional safety functions, outputs Q1, Q2 can be evaluated with safety relay modules SRB or safety controllers.

11. EU Declaration of conformity

EU Declaration of conformity

SCHMERSAL

Original

K.A. Schmersal GmbH & Co. KG
Möddinghofe 30
42279 Wuppertal
Germany
Internet: www.schmersal.com

We hereby certify that the hereafter described components both in their basic design and construction conform to the applicable European Directives.

Name of the component:
SRB-E-204ST
SRB-E-204PE

Type:
See ordering code

Description of the component:
Relay-safety combination for emergency stop circuits, guard door monitoring, solenoid safety switches and AOPDs

Relevant Directives:

Machinery Directive	2006/42/EC
EMC-Directive	2014/30/EU
RoHS-Directive	2011/65/EU

Applied standards:
ISO 13849-1:2015,
ISO 13849-2:2012,
IEC 61508 parts 1-7:2010,
IEC 62061:2015

Notified body, which approved the full quality assurance system, referred to in Appendix X, 2006/42/EC:
TÜV Rheinland Industrie Service GmbH
Am Grauen Stein, 51105 Köln
ID n°: 0035

Person authorised for the compilation of the technical documentation:
Oliver Wacker
Möddinghofe 30
42279 Wuppertal

Place and date of issue:
Wuppertal, September 24, 2021

Authorised signature
Philip Schmersal
Managing Director

SRB-E-204ST-D-EN

The currently valid declaration of conformity can be downloaded from the internet at products.schmersal.com.

K.A. Schmersal GmbH & Co. KG
Möddinghofe 30, 42279 Wuppertal
Germany
Phone: +49 202 6474-0
Fax: +49 202 6474-100
E-Mail: info@schmersal.com
Internet: www.schmersal.com