E12676

Mounting adapter for mounting to pipes

ADAPT KQ10 ROUND MOUNT

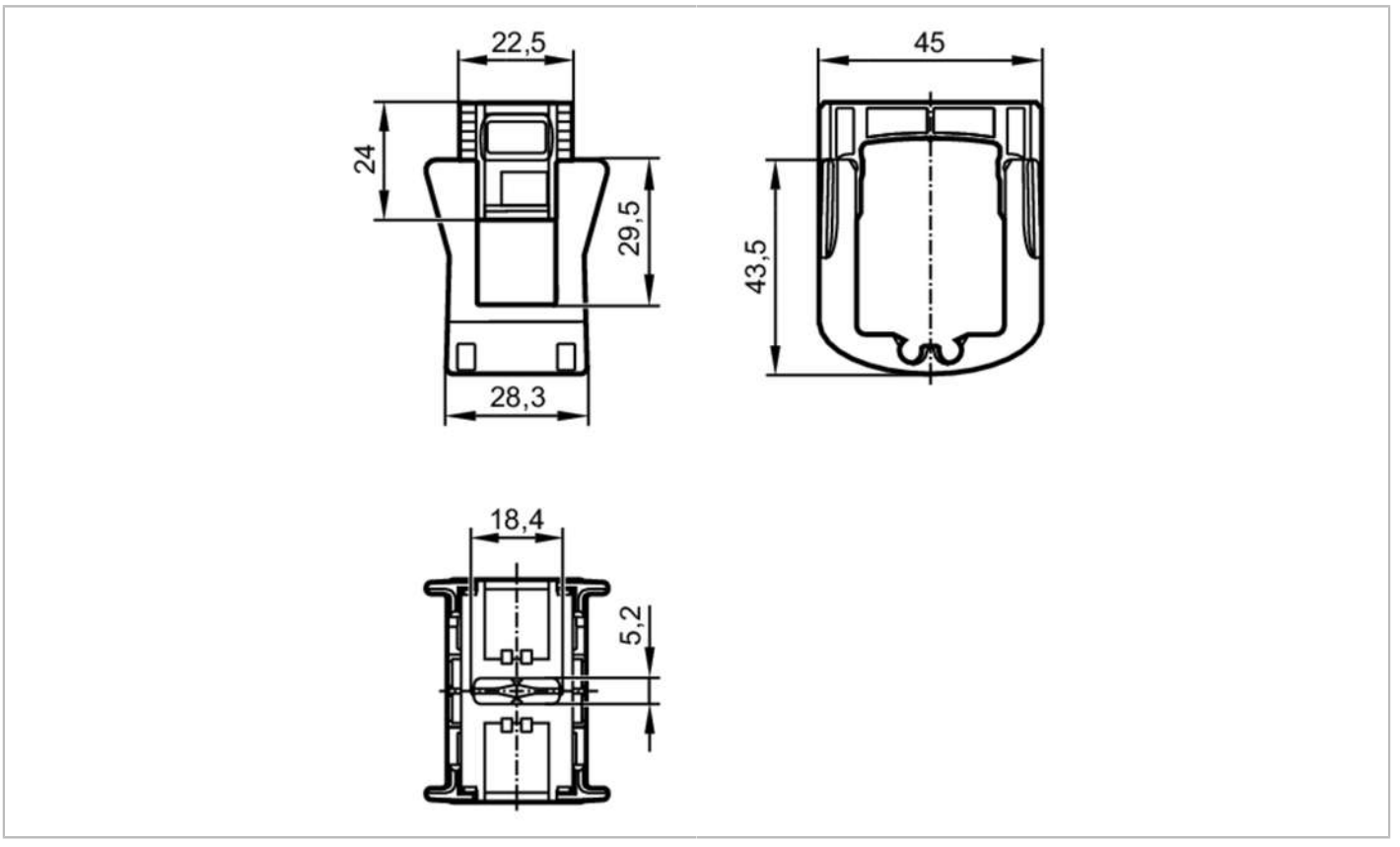

Mechanical data		
Weight	[g]	39.5
Materials		PBT-GF20; PBT; stainless steel (1.4310 / 301); nickel-plated brass

Remarks	
Remarks	
Pack quantity	2 pcs.

E12676

Mounting adapter for mounting to pipes

ADAPT KQ10 ROUND MOUNT

Diagrams and graphs

Installation

