FlexSQUARE / LED EVS Beacon 853

LED EVS Beacon BWM 48VAC YE



Part No.: 853.320.66

MECHANICAL DATA	
Length	85 mm
Width	85 mm
Height	72 mm
Materials	PC PP-GF
Dome colour	Yellow
Housing colour	Black
Protection category	IP66 IP67
Connection	Screw terminals
cross-sectional area maximum	1,50mm² / 16AWG
Cable entry	Membrane grommet
Cable entry minimum	d = 1 mm d = 6 mm
Cable entry maximum	d = 12 mm d = 9 mm
Type of fixing	Base mounting Wall mounting
Working temperature minimum	-25°C
Working temperature maximum	+50°C
Weight with packaging	190 g
Product weight	163 g

ELECTRICAL DATA	
Operating voltage	48V
Operating voltage type	AC
Operating voltage frequency	50Hz
Operating voltage tolerance	+/- 10%
Rated operational voltage	48 VAC
Rated operational current	95 mA
Rated inrush current	2.000 mA
Protection class	Protection class 2
Pollution degree	3

OPTICAL DATA	
Light source	LED
Light colour	Yellow
Optical signal image	EVS
Service life optical	50,000 h maximum

! For additional installation and mounting information, refer to the appropriate user guide at www.werma.com. This printed copy is for information only and is subject to alteration.

FlexSQUARE / LED EVS Beacon 853

LED EVS Beacon BWM 48VAC YE

APPROVAL DATA	
Conforms with CE	Yes
WEEE	Yes
Conforms with ATEX-directive	No
Conforms with CCC	No
Conforms with UL	No
Conforms with FCC	No
Conforms with IC	No
EAC certificate available	Yes
Conforms with AS-I	No
ICAO Certification	No
Conforms with DNV	No
Conforms with RoHS CN	No
Conforms with VdS	No

DRAWING

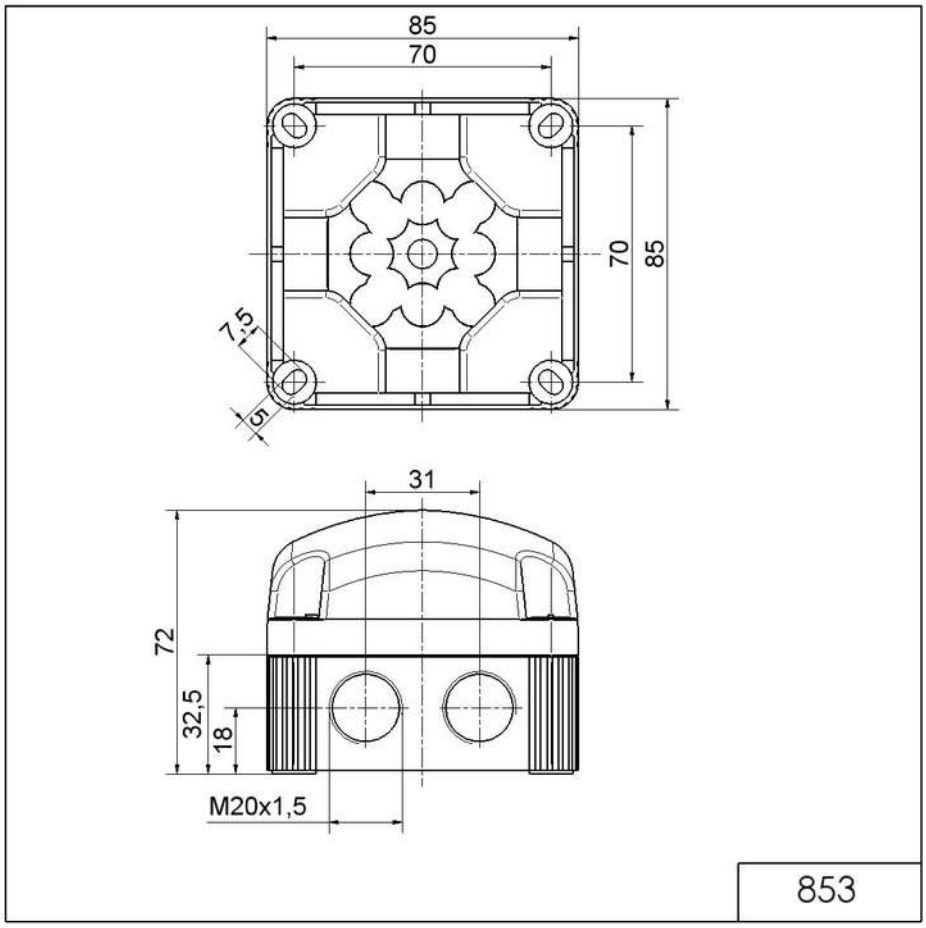

! For additional installation and mounting information, refer to the appropriate user guide at www.werma.com. This printed copy is for information only and is subject to alteration.