Sealing ring

R412010148

2024-04-15

AVENTICS Seals



Technical data

Industry	Industrial
Port G	G 3/8
Min. working pressure	-0.95 bar
Max. working pressure	16 bar
Min. ambient temperature	-10 °C
Max. ambient temperature	60 °C
Delivery unit	10 piece
Housing material	Acrylonitrile butadiene styrene
Part No.	R412010148

Sealing ring

R412010148

2024-04-15

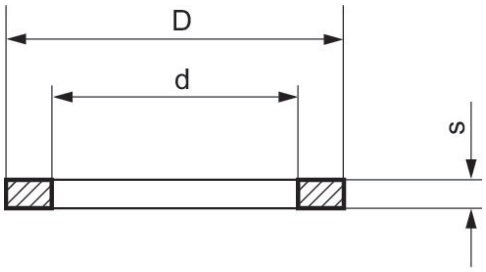

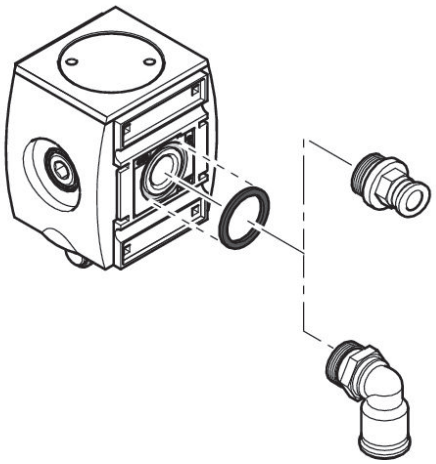

Part No.	usage	Type	d	D	s
R412010148	AS2	For compressed air connection G 3/8	18.5	22.8	2.0
R412010149	AS3	For compressed air connection G 1/2	22.4	26.4	2.0
R412010150	AS5	For compressed air connection G 1	36.9	41.9	2.0