E33302

Process adapter pipe fitting DIN 11864

ADAPT DIN11864-1A-BS/DN40

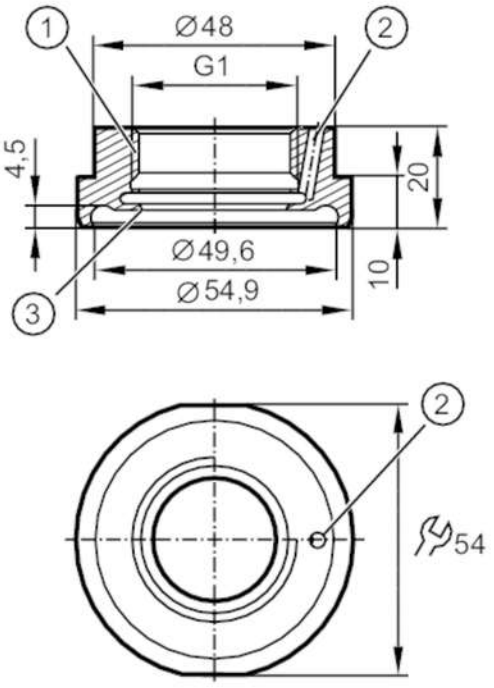

1 Aseptoflex Vario
2 Leakage port
3 sealing area

EC 1935/2004 EHEDG Certified FDA

Application		
Design		with leakage port
Pressure rating	[bar]	25
Tests / approvals		
Pressure Equipment Directive		A possible classification to PED depends on the application and has to be carried out by the user / operator.
Pressure Equipment Directive EAC		The adapter is intended for use in devices, machines and installations that do not fall under the categories of the technical rule TR CU 032/2013.
Safety instructions		The compatibility between medium and product material has to be checked in all applications.
Mechanical data		
Weight	[g]	203
Materials (wetted parts)		stainless steel (1.4435 / 316L) ; surface characteristics : Ra<0,4 / Rz 4
Sensor connection		G 1 Aseptoflex Vario
Process connection		Pipe fitting DN40 DIN 11864-1-A-BS
Sealing		Gasket
Hygienic equipment class to DIN 11866		H4
Accessories		
Items supplied		O-ring: 1 x 24 x 2, EPDM, FDA compliant, E30054
Accessories (optional)		O-ring: 1 x 24 x 2, FKM, FDA compliant, E30123
		sealing ring: 1, PEEK, FDA compliant, E30124

E33302

Process adapter pipe fitting DIN 11864

ADAPT DIN11864-1A-BS/DN40

Remarks	
Pack quantity	1 pcs.