IGC002

Inductive sensor

IGK2012-ARKA/M/LS-104AK

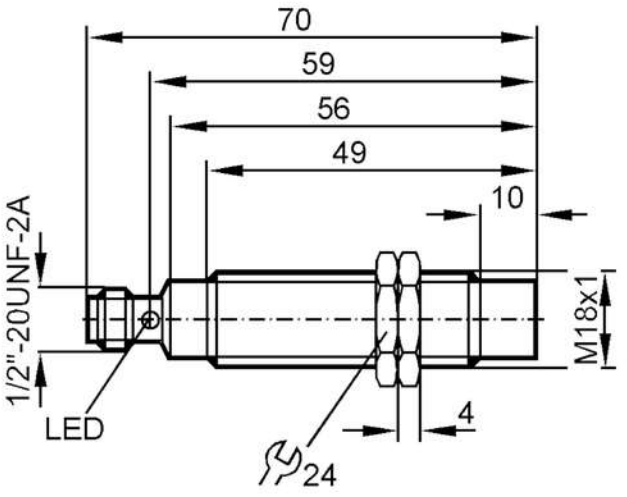

Product characteristics		
Output function		normally open
Sensing range	[mm]	12
Housing		threaded type
Dimensions	[mm]	M18 x 1
Application		
Special feature		Gold-plated contacts; Increased sensing range
Application		Use in machine tools, coolants and lubricants
Electrical data		
Frequency AC	[Hz]	47...63
Operating voltage	[V]	20...140 AC/DC
Protection class		II
Reverse polarity protection		yes
Max. power-on delay time	[ms]	1000
Outputs		
Output function		normally open
Max. voltage drop switching output DC	[V]	5.5
Max. voltage drop switching output AC	[V]	5.5
Minimum load current	[mA]	5
Max. leakage current	[mA]	1
Permanent current rating of switching output AC	[mA]	200

IGC002

Inductive sensor

IGK2012-ARKA/M/LS-104AK

Permanent current rating of switching output DC	[mA]	200	
Short-time current rating of switching output	[mA]	1200; (20 ms / 0,5 Hz)	
Switching frequency AC	[Hz]	25	
Switching frequency DC	[Hz]	400	
Short-circuit protection		yes	
Type of short-circuit protection		pulsed	
Overload protection		yes	
Detection zone			
Sensing range	[mm]	12	
Real sensing range Sr	[mm]	12 ± 10 %	
Operating distance	[mm]	0...9.7	
Increased sensing range		yes	
Accuracy / deviations			
Correction factor		steel: 1 / stainless steel: 0.7 / brass: 0.5 / aluminium: 0.4 / copper: 0.3	
Hysteresis	[% of Sr]	3...15	
Switch point drift	[% of Sr]	-10...10	
Operating conditions			
Ambient temperature	[°C]	-25...70	
Protection		IP 68; ("Coolant")	
Tests / approvals			
EMC		EN 61000-4-2 ESD	4 kV CD / 8 kV AD
		EN 61000-4-3 HF radiated	10 V/m
		EN 61000-4-4 Burst	2 kV
		EN 61000-4-6 HF conducted	10 V
		EN 55011	class B
MTTF	[years]	394	
UL approval		Ta	0...40 °C
		Enclosure type	Type 1
		power supply	Hazardous voltage
		File number UL	E174191
Mechanical data			
Weight	[g]	74.4	
Housing		threaded type	
Mounting		non-flush mountable	
Dimensions	[mm]	M18 x 1	
Thread designation		M18 x 1	
Materials		housing: brass white bronze coated; sensing face: PBT uncoloured	
Displays / operating elements			
Display		switching status	4 x 90° LED, yellow
Accessories			
Items supplied		lock nuts: 2	

IGC002

Inductive sensor

IGK2012-ARKA/M/LS-104AK

Remarks	
Pack quantity	1 pcs.

Electrical connection - plug

Connector: 1 x 1/2"; coding: C; Contacts: gold-plated



