MODEL: BU-P2269

Double Banana Jack (Panel mount)

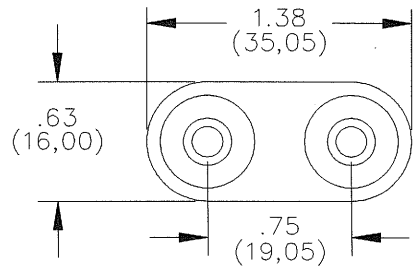

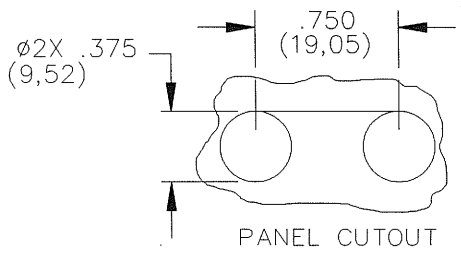

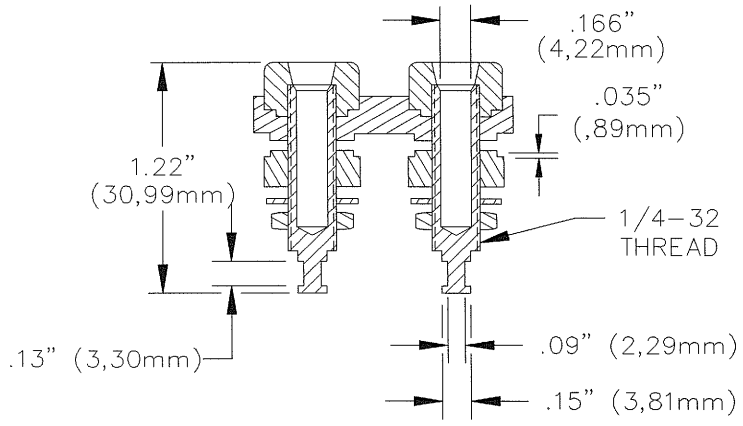

MATERIALS:
Contacts – Nickel Plated Brass
Insulators – Nylon

Solder connection

RATING:
15 Amps
Hands free testing to 1000 VDC max.
Temperature: -50°C to 120°C