11BGP0910A048

THREE-POLE CONTACTOR, IEC OPERATING CURRENT IE (AC3) = 9A, AC COIL 50/60HZ, 48VAC, 1NO AUXILIARY CONTACT, REAR PCB SOLDER PIN



Product designation			Power contactor
Product type designation			BGP09
Contact characteristics			
Number of poles		Nr.	3
Rated insulation voltage Ui IEC/EN		V	690
Rated impulse withstand voltage Uimp		kV	6
Operational frequency			
	min	Hz	25
	max	Hz	400
IEC Conventional free air thermal current Ith		A	20
Operational current Ie			
	AC-1 (≤40°C)	A	20
	AC-1 (≤55°C)	A	18
	AC-1 (≤70°C)	A	15
	AC-3 (≤440V ≤55°C)	A	9
	AC-4 (400V)	A	4
Rated operational power AC-3 (T≤55°C)			
	230V	kW	2.2
	400V	kW	4
	415V	kW	4.3
	440V	kW	4.5
	500V	kW	5
Rated operational power AC-1 (T≤40°C)			
	230V	kW	8
	400V	kW	14
	500V	kW	16
	690V	kW	22
Short-time allowable current for 10s (IEC/EN60947-1)		A	96
Protection fuse			
	gG (IEC)	A	20
	aM (IEC)	A	10
Making capacity (RMS value)		A	92
Breaking capacity at voltage			
	440V	A	72
	500V	A	72
	690V	A	72
Resistance per pole (average value)		mΩ	10
Power dissipation per pole (average value)			
	Ith	W	4
	AC3	W	0.81
Tightening torque for terminals			
	min	Nm	0.8
	max	Nm	1
	min	lbin	9
	max	lbin	9

The characteristics described in this document are subject to updates or modifications at any time. The descriptions, technical and functional information, illustrations and instructions in this brochure are purely illustrative, and are consequently not contractually binding

Tightening torque for coil terminal				
		min	Nm	0.8
		max	Nm	1
		min	lbin	9
		max	lbin	9
Max number of wires simultaneously connectable			Nr.	2
Conductor section				
	AWG/Kcmil			
		max		12
	Flexible w/o lug conductor section			
		min	mm²	0.8
		max	mm²	2.5
	Flexible c/w lug conductor section			
		min	mm²	1.5
		max	mm²	2.5
	Flexible with insulated spade lug conductor section			
		min	mm²	1.5
		max	mm²	2.5
Power terminal protection according to IEC/EN 60529				IP00
Mechanical features				
Operating position				
		normal		Vertical plan
		allowable		±30°
Fixing				Screw / DIN rail 35mm
Weight			g	200
Conductor section				
	AWG/kcmil conductor section			
		max		12
Auxiliary contact characteristics				
Thermal current Ith			A	10
IEC/EN 60947-5-1 designation				A600 - Q600
Operating current AC15				
		230V	A	3
		400V	A	1.9
		500V	A	1.4
Operating current DC12				
		110V	A	2.9
Operating current DC13				
		24V	A	2.9
		48V	A	1.4
		60V	A	1.1
		125V	A	0.3
		220V	A	0.1
		600V	A	0.6
Operations				
Mechanical life			cycles	20000000
Electrical life			cycles	500000
Safety related data				
Performance level B10d according to EN/ISO 13489-1				
		rated load	cycles	500000
		mechanical load	cycles	20000000
Mirror contats according to IEC/EN 609474-4-1				yes

The characteristics described in this document are subject to updates or modifications at any time. The descriptions, technical and functional information, illustrations and instructions in this brochure are purely illustrative, and are consequently not contractually binding

11BGP0910A048

THREE-POLE CONTACTOR, IEC OPERATING CURRENT IE (AC3) = 9A, AC COIL 50/60HZ, 48VAC, 1NO AUXILIARY CONTACT, REAR PCB SOLDER PIN

EMC compatibility				yes
AC coil operating				
Rated AC voltage at 50/60Hz			V	48
AC operating voltage				
of 50/60Hz coil powered at 50Hz				
pick-up				
		min	%Us	75
		max	%Us	115
drop-out				
		min	%Us	20
		max	%Us	55
of 50/60Hz coil powered at 60Hz				
pick-up				
		min	%Us	80
		max	%Us	115
drop-out				
		min	%Us	20
		max	%Us	55
AC average coil consumption at 20°C				
of 50/60Hz coil powered at 50Hz				
		in-rush	VA	30
		holding	VA	4
of 50/60Hz coil powered at 60Hz				
		in-rush	VA	25
		holding	VA	3
of 60Hz coil powered at 60Hz				
		in-rush	VA	30
		holding	VA	4
Dissipation at holding ≤20°C 50Hz			W	0.95
Max cycles frequency				
Mechanical operation			cycles/h	3600
Operating times				
Average time for Us control				
in AC				
Closing NO				
		min	ms	12
		max	ms	21
Opening NO				
		min	ms	9
		max	ms	18
Closing NC				
		min	ms	17
		max	ms	26
Opening NC				
		min	ms	7
		max	ms	17
in DC				
Closing NO				
		min	ms	18
		max	ms	25
Opening NO				
		min	ms	2
		max	ms	3
Closing NC				

The characteristics described in this document are subject to updates or modifications at any time. The descriptions, technical and functional information, illustrations and instructions in this brochure are purely illustrative, and are consequently not contractually binding

		min	ms	3
		max	ms	5
	Opening NC			
		min	ms	11
		max	ms	17
UL technical data				
Full-load current (FLA) for three-phase AC motor				
		at 480V	A	7.6
		at 600V	A	6.1
Yielded mechanical performance				
	for single-phase AC motor			
		110/120V	HP	0.5
		230V	HP	1.5
	for three-phase AC motor			
		200/208V	HP	2
		220/230V	HP	3
		460/480V	HP	5
		575/600V	HP	5
General USE				
	Contactor			
		AC current	A	20
Contact rating of auxiliary contacts according to UL				A600 - Q600
Ambient conditions				
Temperature				
	Operating temperature			
		min	°C	-50
		max	°C	+70
	Storage temperature			
		min	°C	-60
		max	°C	+80
Max altitude			m	3000
Resistance & Protection				
Pollution degree				3
Dimensions				

The characteristics described in this document are subject to updates or modifications at any time. The descriptions, technical and functional information, illustrations and instructions in this brochure are purely illustrative, and are consequently not contractually binding

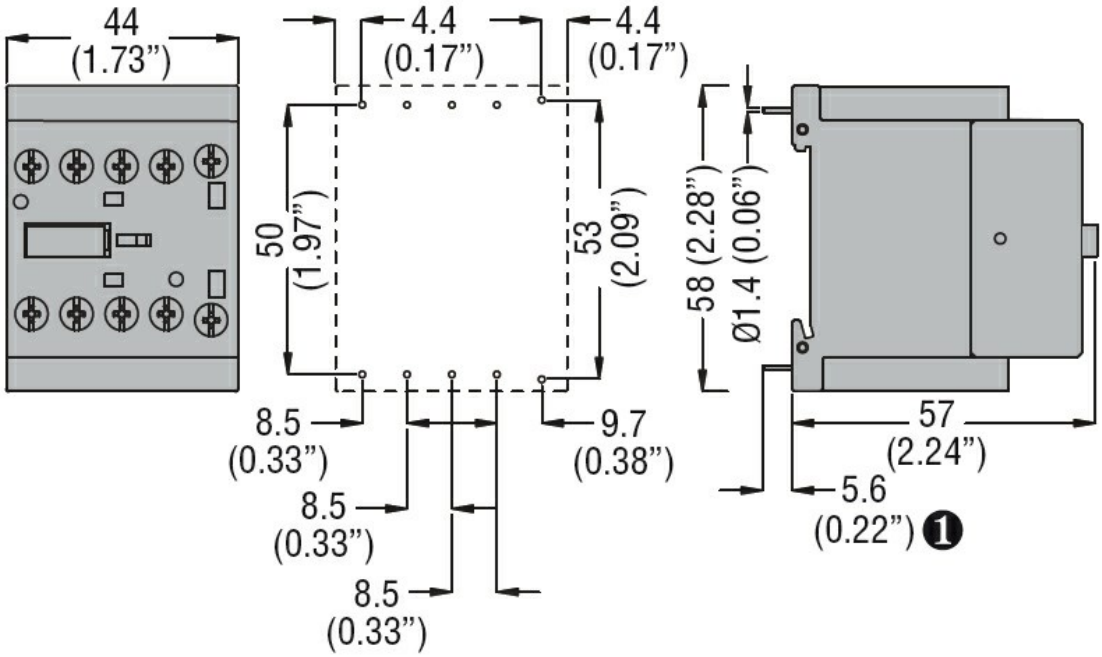

❶ Recommended PCB drillings 1.7-2mm.

Wiring diagrams

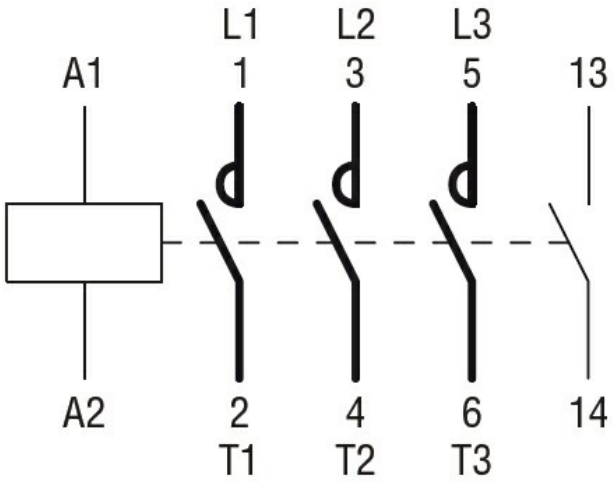

Certifications and compliance

Compliance

CSA C22.2 n° 60947-1
CSA C22.2 n° 60947-4-1
IEC/EN 60947-1
IEC/EN 60947-4-1
UL 60947-1
UL 60947-4-1

Certificates

cURus
EAC

ETIM classification

ETIM 8.0	EC000066 - Power contactor, AC switching

The characteristics described in this document are subject to updates or modifications at any time. The descriptions, technical and functional information, illustrations and instructions in this brochure are purely illustrative, and are consequently not contractually binding