Part Number:	**BU-60HS-* /BU-60CHS-***
Description:	**Alligator Clip with Acetate Handle and Screw**
3707	

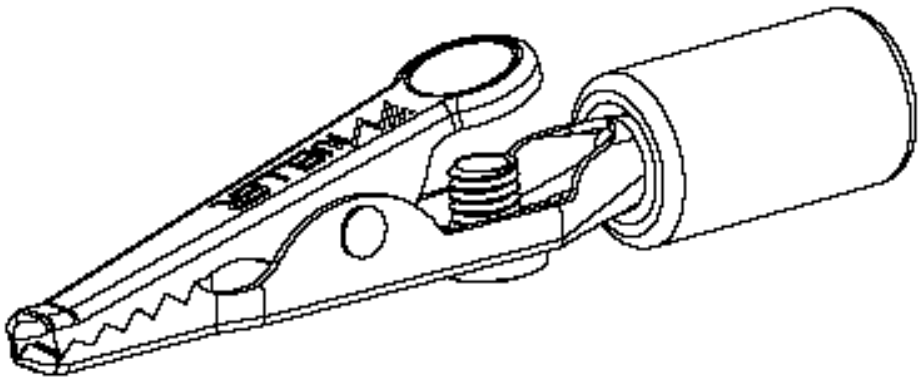

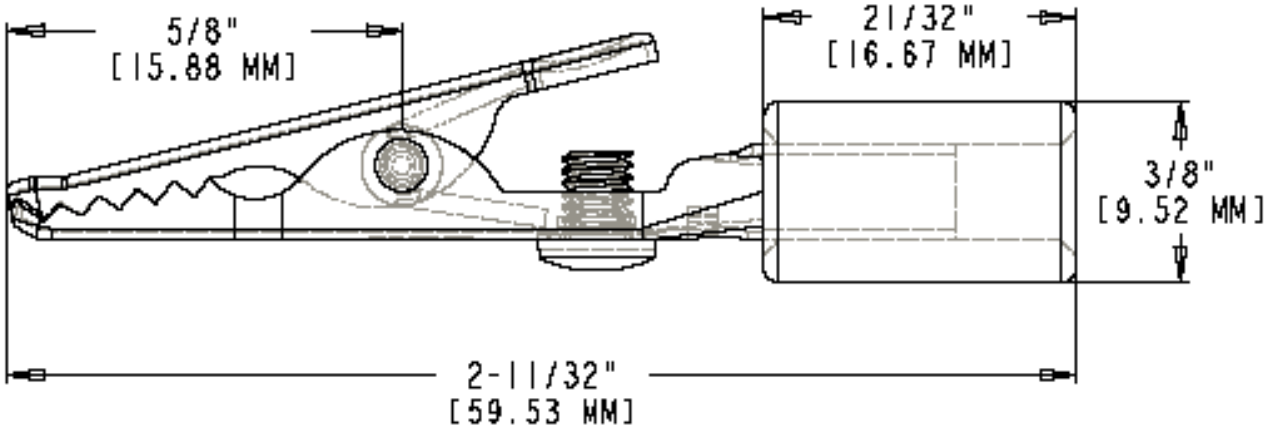

- Alligator Clip with Acetate Handle and Screw
- Same as BU-60H-* and includes a 6-40 screw
- Jaw opens 0.31” (7.9 mm) max
- Material: Nickel-plated steel (BU-60HS-*) or solid copper (BU-60CHS-*)
- Length: 2.34” (59.53 mm)
- *Std.Colors: -0 Black, -2 Red, -4 Yellow, -5 Green, -6 Blue, -9 White
- Federal Spec: Type TCI-1 (red), TCI-2 (black), W-C-440B (BU-60CHS-*)
- Rating: 10 Amps
- RoHS Compliant

Mueller Electric Company
1625 E. 31st Street
Cleveland, Ohio 44114

ISO 9001:2000
Over 95 Years Of Innovation
www.muellerelectric.com

TEL. 800-955-2629
TEL. 216-771-5225
FAX. 216-771-3068