MODEL NO.	"L"	P/N
BR2.51.6S	19	24545
BR2.56SM600	72	24405
BR2.57S	84	23568
BR2.540S	480	00000
BR2.52S	24	22479
BR2.520S	240	21774
BR2.53SM600	36	21545
BR2.510S	120	20493
BR2.51S	12	17991
BR2.54S	48	17963
BR2.55S	60	20284
BR2.56S	72	17393
BR2.58S	96	20343
BR2.53S	36	17379

MODEL NO.	"L"	P/N
BR2.510SM600	120	00000
BR2.513S	156	65960
BR2.533S	394	00000
BR2.512S	144	62275
BR2.59S	108	59229

NOTES:

1. 'M600' SUFFIX INDICATES THAT FIBERS POTTED ON RECTANGULAR END WITH EPOXY THAT OPERATES IN MAX. TEMPERATURE OF 600°F.

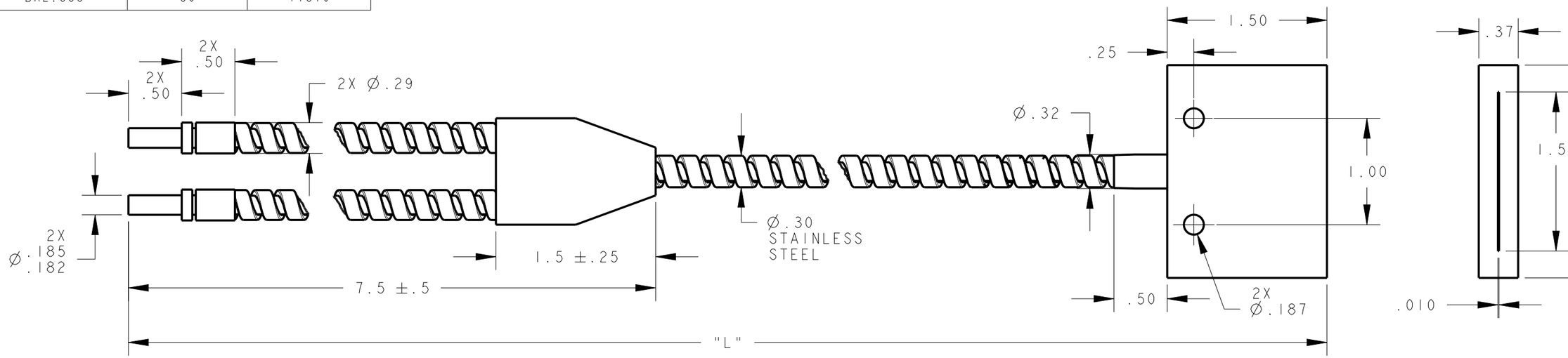

NOTES:
1. ALL DIMENSIONS ARE MILLIMETERS [INCHES] UNLESS OTHERWISE NOTED.
2. REFER TO "www.bannerengineering.com" FOR ADDITIONAL DATA AND SPECIFICATIONS.

This drawing is the property of BANNER ENGINEERING CORP. Any use or reproduction, in any form, without prior written permission of Banner is prohibited.
© 2015 Banner Engineering Corp.

THIRD ANGLE PROJECTION

BANNER ENGINEERING CORP.
www.bannerengineering.com

TITLE

BR2.5 SERIES SS TERMINATED

SIZE	DRAWING NO.	REV.
B	161929	A
SCALE 1:1	SHEET 1 OF 1	

CREO