Brand of NTN corporation

Technical data

BBET25UU-OP

Super ball bushings



VISUAL (S)

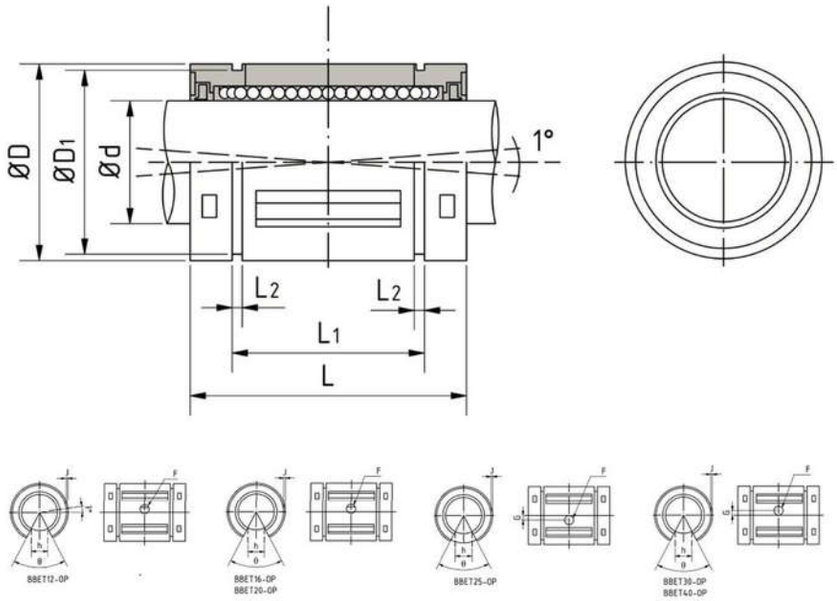

PRODUCT DEFINITION

Brand	SNR
Design type	BBET
Ball bushings category	Super ball bushings, closed
Standard	ISO dimension
Number of seals	2
Material outer cylinder or steel segments	100Cr6
Material Cage	PA
Initial greasing	Non/No
Re-lubricable	Oui/Yes

NTN Europe
1 rue des Usines · BP 2017 · 74010 Annecy Cedex · France · Tel. +33 (0)4 50 65 30 00
S.A. au capital de 322 639 919 € · RCS ANNECY B 325 821 072 · Id. Fiscale : FR 48 325 821 072
SIRET 325 821 072 00015 · Code APE 2815 Z · Code NACE 28.15

BBET25UU-OP
Super ball bushings

PRODUCT DEFINITION	
Fixing hole	Oui/Yes
d - Internal diameter	25 mm
d - Internal diameter tolerance	0,011/-0,001
D - External diameter	40 mm
L - Length	58 mm
L - Length tolerance	0,2/-0,2
L1	44,1 mm
L1 tolerance	0/-0,3
D1 - Diameter	37,5 mm
L2	1,85 mm
E	11,5 mm
Alpha	57 °
Diameter F H11	3 mm
G	1,5 mm
J	1,5 mm
Number of ball rows	5
Mass	0,103 kg

PRODUCT PERFORMANCE	
Cmin	3,78 kN
Cmax	3,78 kN
C0min	4,72 kN
C0max	4,72 kN
Crev for OP	2154.6

BBET25UU-OP
Super ball bushings

PRODUCT PERFORMANCE	
C0rev for OP	2690.4
Tmin - Min operating temperature	-20 °C
Tmax - Max operating temperature	80 °C

ESHOPDONOTDISPLAY	
Reference	BBET25UU-OP
Image	BBET-OP_1.JPG, BBET-OP_3.JPG
Send to Eshop	Yes
Send to Paper Catalog	Yes
Tracepart	Oui/Yes