Product data sheet

Specifications



Photoelectric sensors XU, XUX, emitter, 24...240VAC/DC, terminals

XUX0ARCTT16T

Main

Range of product	Telemecanique Photoelectric sensors XU
Series name	General purpose multimode
Electronic sensor type	Photo-electric sensor transmitter
Sensor name	XUX
Sensor design	Compact 92 x 71
Detection system	Thru beam
Material	Plastic
Supply circuit type	AC/DC
Wiring technique	3-wire
Electrical connection	Screw-clamp terminals, 1 x 1.5 mm² or 1 x 0.75 mm² with adaptor
Product specific application	-
Emission	Infrared thru beam
[Sn] nominal sensing distance	40 m thru beam need a receiver

Complementary

Enclosure material	PBT
Lens material	PMMA
Maximum sensing distance	60 m thru beam
Add on input	Test by emission breaking
Cable entry	1 entry for M16 x 1.5 cable gland, cable outer diameter: 7…10 mm
Status LED	1 LED (green) for supply on
[Us] rated supply voltage	24...240 V AC/DC
Supply voltage limits	20…264 V AC/DC
Switching capacity in mA	0.5 A (cos φ = 0.4 for 0.5 million cycles at 1 operating cycle per second at 250 V) 3 A (cos φ = 1 for 0.5 million cycles at 1 operating cycle per second at 250 V)
Switching frequency	<= 20 Hz
Maximum voltage drop	<1.5 V (closed state)
Current consumption	20 mA no-load
Time delay range	0.02...15 s monostable, on-delay or off-delay (programmable) delay

Disclaimer: This documentation is not intended as a substitute for and is not to be used for determining suitability or reliability of these products for specific user applications

Maximum delay first up	200 ms
Maximum delay response	25 ms
Maximum delay recovery	25 ms
Setting-up	Without sensitivity adjustment
Electrical durability	500000 cycles, cos f = 0.4, operating rate <500 cyc/mn 500000 cycles, cos f = 1, operating rate <3000 cyc/mn
Depth	77 mm
Height	92 mm
Width	31 mm
Net weight	0.2 kg

Environment

Product certifications	UL CSA CE
Ambient air temperature for operation	-25…55 °C
Ambient air temperature for storage	-40…70 °C
Vibration resistance	7 gn, amplitude = +/- 1.5 mm (f = 10…55 Hz) conforming to IEC 60068-2-6
Shock resistance	30 gn (duration = 11 ms) conforming to IEC 60068-2-27
IP degree of protection	IP65 double insulation conforming to IEC 60529 IP67 double insulation conforming to IEC 60529

Packing Units

Unit Type of Package 1	PCE
Package 1 Length	13.0 cm
Number of Units in Package 1	1
Package 2 Width	30.0 cm
Package 2 Height	15.0 cm
Package 2 Weight	4.367 kg
Package 1 Width	9.5 cm
Package 1 Height	4.0 cm
Package 1 Weight	184.0 g
Number of Units in Package 2	22
Unit Type of Package 2	S02
Package 2 Length	40.0 cm

Offer Sustainability

Sustainable offer status	Green Premium product
REACh Regulation	REACh Declaration
EU RoHS Directive	Pro-active compliance (Product out of EU RoHS legal scope) EU RoHS Declaration
Mercury free	Yes
RoHS exemption information	Yes
Environmental Disclosure	Product Environmental Profile
Circularity Profile	End of Life Information

California proposition 65	WARNING: This product can expose you to chemicals including: Diisononyl phthalate (DINP), which is known to the State of California to cause cancer, and Di-isodecyl phthalate (DIDP), which is known to the State of California to cause birth defects or other reproductive harm. For more information go to www.P65Warnings.ca.gov

Contractual warranty

Warranty	18 months

Product data sheet XUX0ARCTT16T

Dimensions Drawings

Dimensions

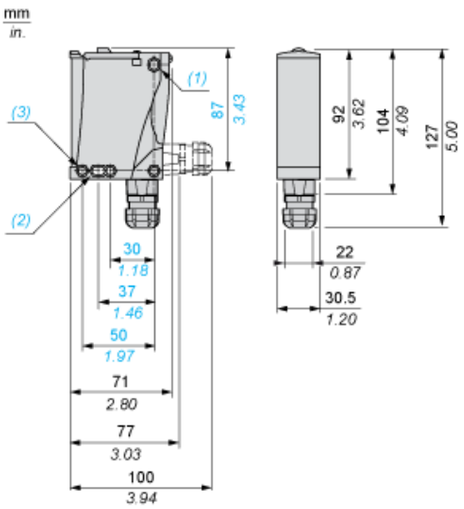

(1) Elongated hole Ø 5.5 x 7
(2) Elongated hole Ø 5.5 x 9
(3) Ø 5.5 hole

Wiring Schemes

Transmitter DC

M12		Terminals		
1		1		+
3		2		-
2		3		Beam break input (1)

(1) Input not connected: beam made. Input connected to –: beam broken.

Detection Curves

