LPCBL7113

Double-touch actuator, spring return, white indicator Ø22mm Platinum series chromed plastic, 2 flush pushbuttons. Both spring return, Green - Red



Product designation			Double-touch actuators, spring return white indicator - Two flush pushbuttons
Product type designation			LPCBL71
General characteristics			
Colour			Green/Red
Material			Polyamide
IEC degree of protection			IP66, IP67 and IP69K
Mechanical features			
Operating force		kg-lb	<0.5Kg / 1.1lb
Mounting adapter			LPXAU120
Weight		g	30
UL technical data			
UL degree of protection			Type1, 2, 3R, 4, 4X, 12, 12K
Ambient conditions			
Temperature			
	Operating temperature		
	min	°C	-25
	max	°C	+70
	Storage temperature		
	min	°C	-40
	max	°C	+85

Dimensions

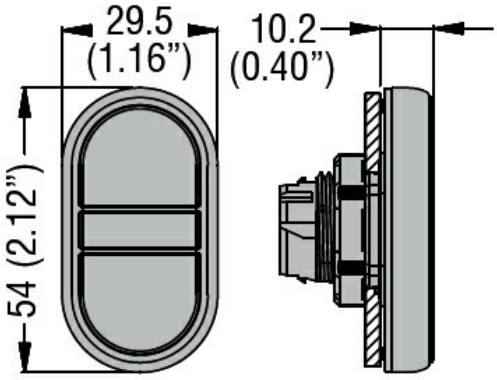

Certifications and compliance

Compliance

CSA C22.2 n° 14
IEC/EN/BS 60947-1
IEC/EN/BS 60947-5-1
UL508

Certificates

The characteristics described in this document are subject to updates or modifications at any time. The descriptions, technical and functional information, illustrations and instructions in this brochure are purely illustrative, and are consequently not contractually binding

LPCBL7113

Double-touch actuator, spring return, white indicator Ø22mm Platinum series chromed plastic, 2 flush pushbuttons. Both spring return, Green - Red

CCC
cULus
EAC
RINA

ETIM classification

ETIM 8.0	EC000221 - Front element for push button

The characteristics described in this document are subject to updates or modifications at any time. The descriptions, technical and functional information, illustrations and instructions in this brochure are purely illustrative, and are consequently not contractually binding