COMUS Group

COMUS International

Part Number: AU2402-7
Movement / Vibration Sensor - Surface Mount
Product Data Sheet

PICTURE



✔RoHS Compliant

OPERATION

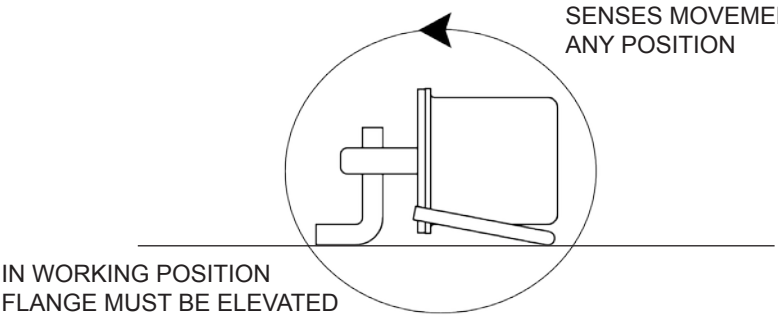

FEATURES

- Resistant to Ambient Environmental Conditions
- Case Material : Gold Plated
- Mechanical Stress Resistant
- Antivibration Feature
- Hermetically Sealed & Inert Gas Filled

DIMENSIONS

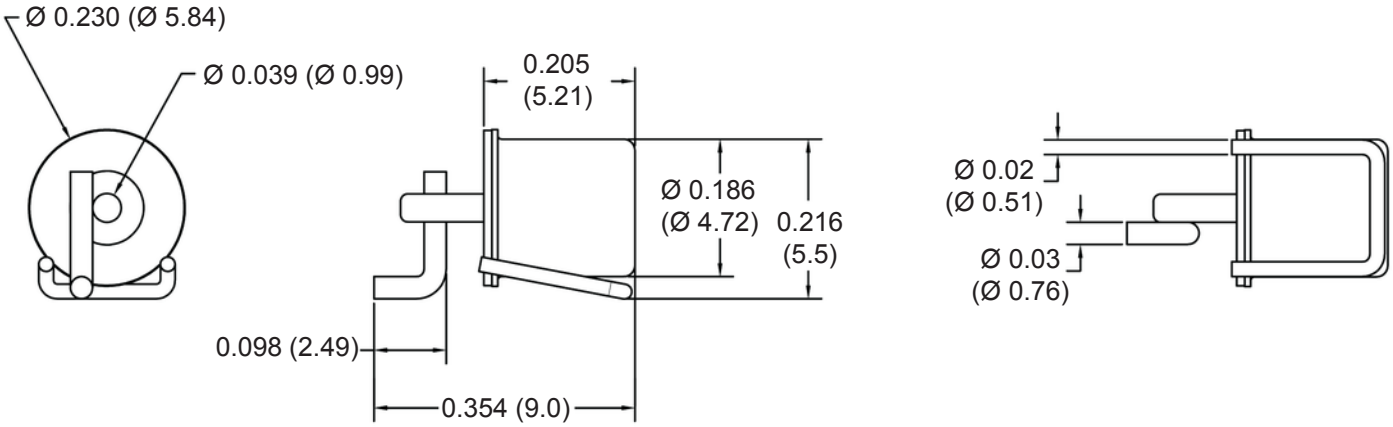

Drawings not to scale.
All dimensions in inches (mm) nominal.

SPECIFICATION

Contact Capacity	5 VA MAX
Contact Resistance	100 Ohms MAX
Operating Temperature	-37˚ +100˚C

As part of the company policy of continued product improvement, specifications may change without notice. Our sales office will be pleased to help you with the latest information on this product range and the details of our full design and manufacturing service. All products are supplied to our standard conditions of sale unless otherwise agreed in writing.

Phone: (1) 973 777 6900 **www.comus-intl.com** **Fax: (1) 973 777 8405**

Belgium: + 32 (0)12 390400 - Assemtech, UK: +44 (0) 1255 862236 - Germany: +49 (0)911 923 15 943

©2012 Copyright Comus International, 454 Allwood Road, Clifton NJ 07012, USA

An ISO 9001 Certified Company