$50.00

CDN 994

Heavy Duty Pillow Blocks

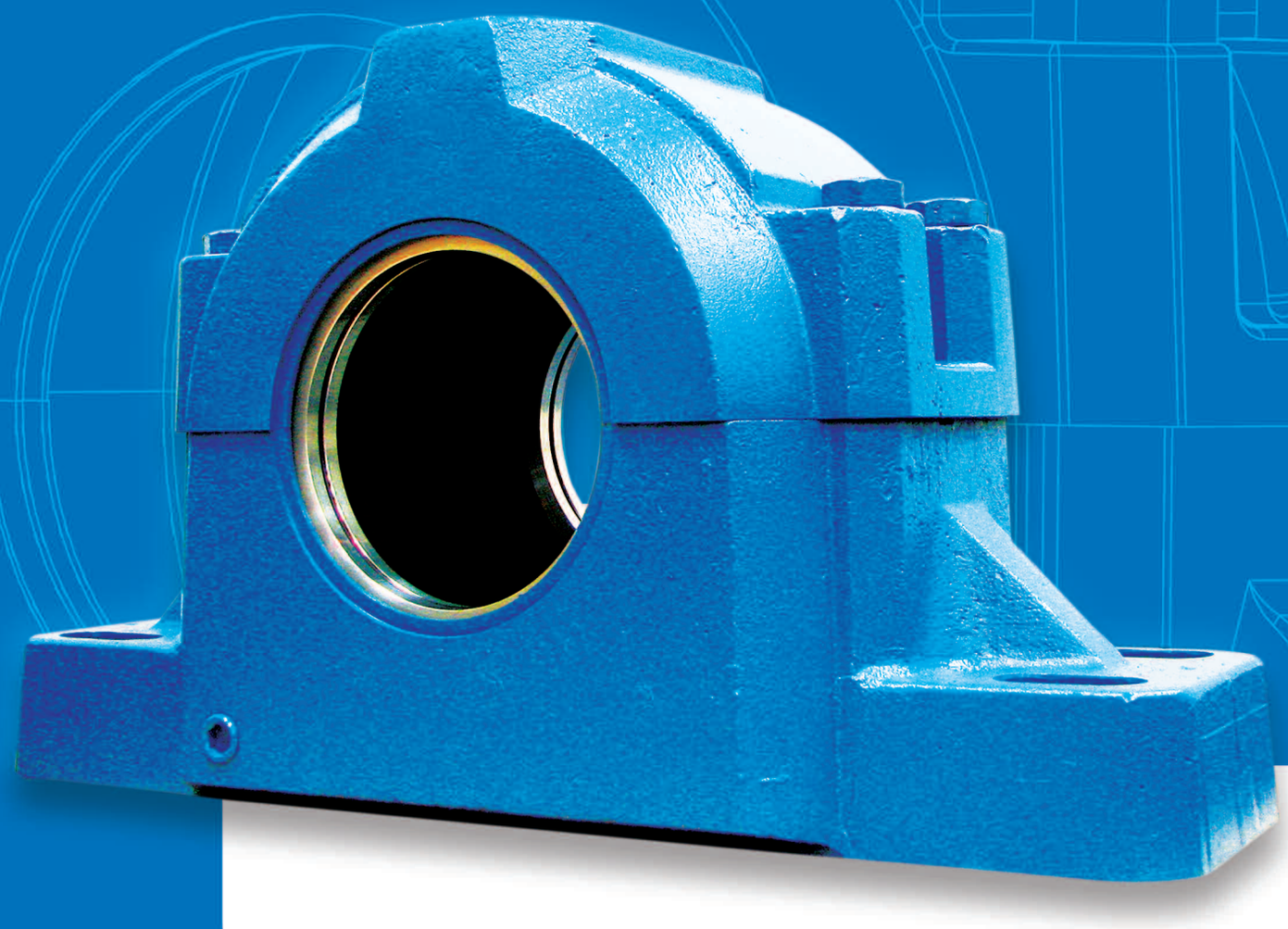







Heavy Duty Pillow Blocks

SKF Canada Limited

Pillow blocks terminology

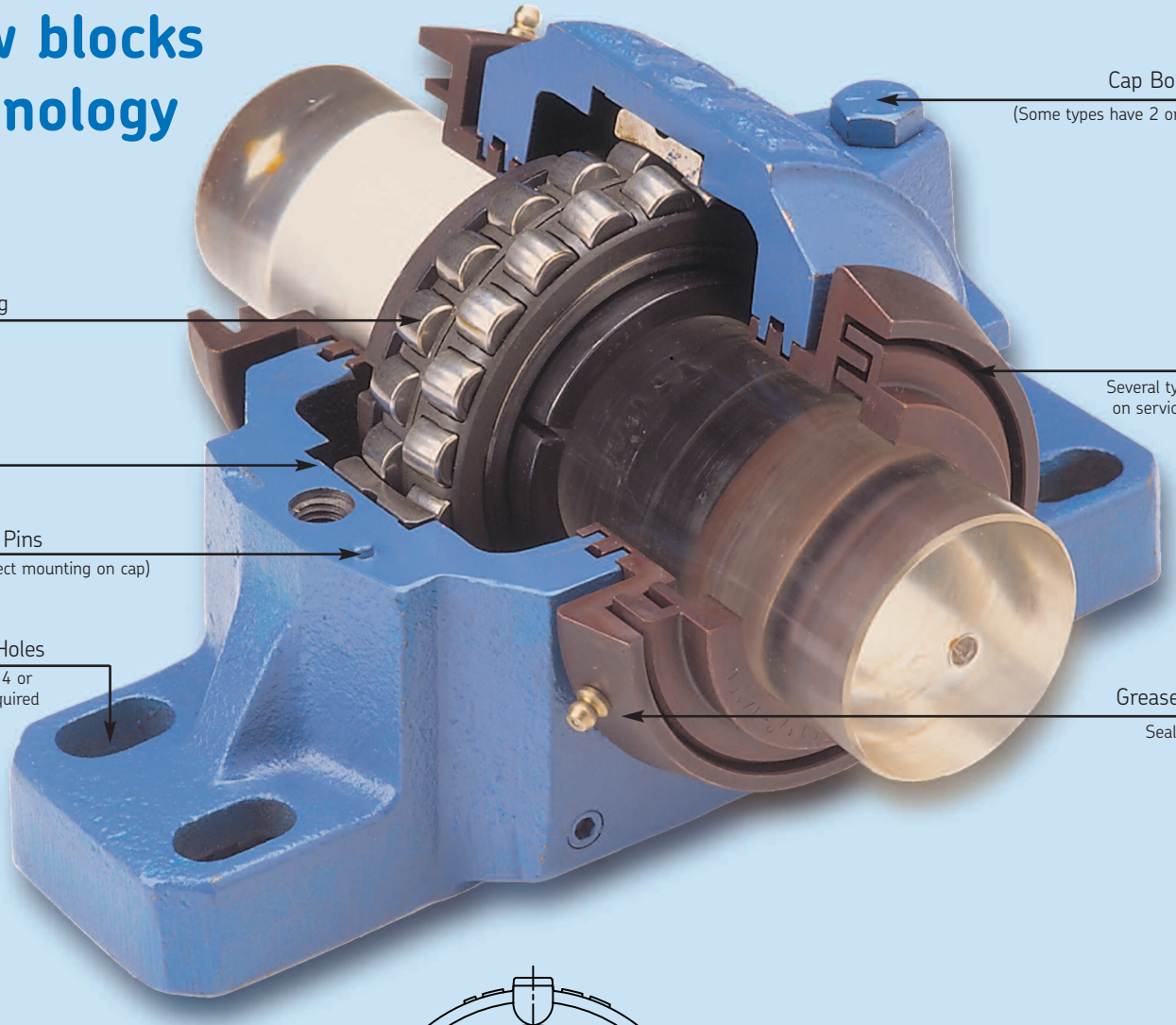

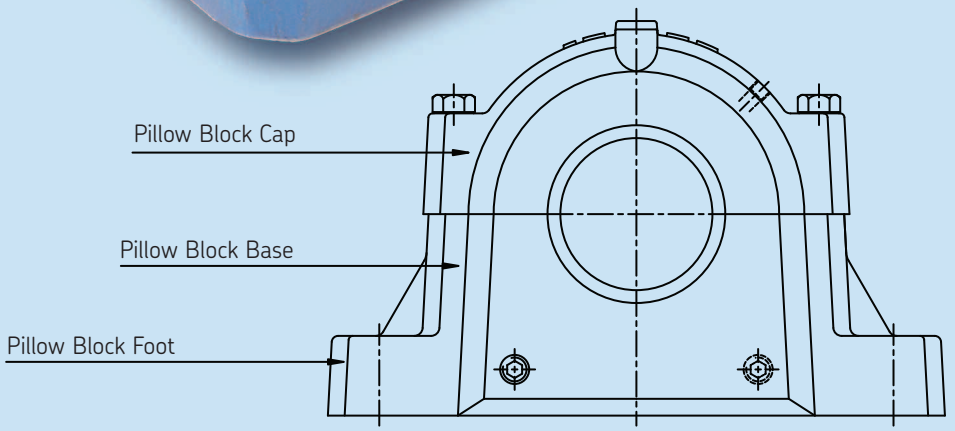

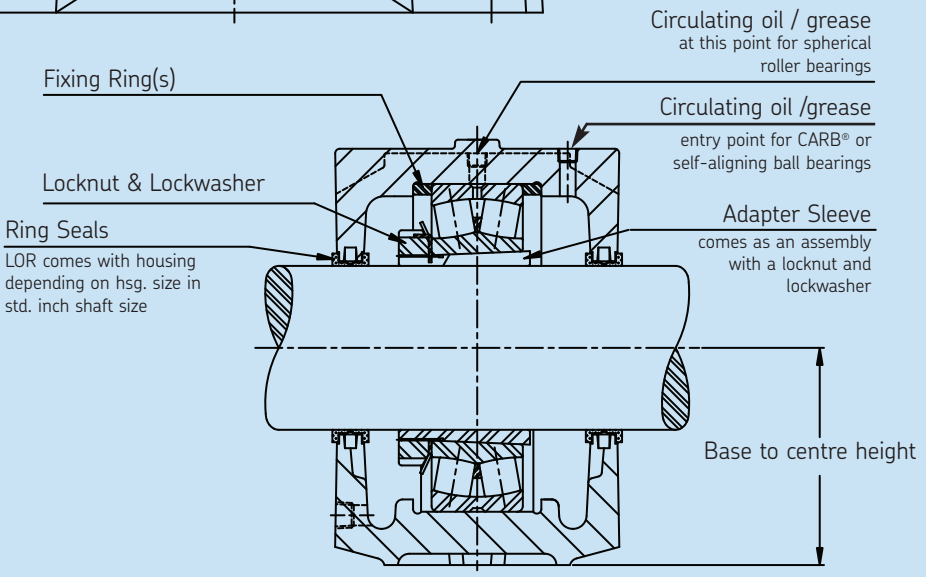

Introduction

From the company that invented the self-aligning ball bearing 100 years ago, SKF has evolved into a knowledge engineering company that is able to draw on five platforms to create unique solutions for its customers. These platforms include bearings, bearing units and seals, of course, but extend to other areas including: lubricants and lubrication systems, critical for long bearing life in many applications; mechatronics that combine mechanical and electronics knowledge into systems for more effective linear motion and sensorized solutions; and a full range of services, from design and logistics support to condition monitoring and reliability systems.

Though the scope has broadened, SKF continues to maintain the world's leadership in design, manufacture and marketing of rolling bearings, as well as complementary products such as radial seals. SKF also holds an increasingly important position in the market for linear motion products, high-precision aerospace bearings, machine tool spindles and plant maintenance services.

The SKF Group has global ISO 14001 environmental certification, individual divisions have been approved for quality certification in accordance with either ISO 9000 or QS 9000.

With some 100 manufacturing sites worldwide and sales companies in 70 countries, SKF is a truly international corporation. In addition, our distributors and dealers in some 15 000 locations around the world, an e-business marketplace and a global distribution system put SKF close to customers for the supply of both products and services. In essence, SKF solutions are available wherever and whenever customers need them. Overall, the SKF brand and the corporation are stronger than ever. As the knowledge engineering company, we stand ready to serve you with world-class product competencies, intellectual resources and the vision to help you succeed.

Made by SKF stands for excellence. It symbolizes our consistent endeavor to achieve total quality in everything we do. For those who use our product, "Made by SKF" implies three main benefits:

Reliability – thanks to modern, efficient products, based on our worldwide application know-how, optimized materials, forward-looking designs and the most advanced production techniques.

Cost effectiveness – resulting in the favourable ratio between our product quality plus services facilities and the purchase price of the product.

Market leadership – which you can achieve by taking advantage of our products and services Increased operating time and reduced down-time, as well as improved output and product quality are the key to a successful partnership.

ABOUT THE CATALOGUE

The following tables include complete assembly, housing, bearing, adapter and seal numbers, important dimensions and load ratings and are arranged for maximum convenience.

Dimensions, weights and loads are shown in both metric and imperial values.

The publication is designed to enable you to understand how best to select the pillow blocks and bearings that will be compatible with your requirements.

Load, Speed, Ambient Conditions, Lubrication, Life and Dimensions

Installation procedures, lubrication and maintenance recommendations are explained in easy-to-follow steps.

For more detailed information on products, applications, maintenance or monitoring please contact the SKF Engineering department or you nearest SKF District Office. (See the back cover for local branch information)

Copyright SKF Canada Limited 2008
The contents of this publication are the copyright of the publisher and may not be reproduced (even extracts) unless permission is granted. Every care has been taken to ensure the accuracy of the information contained in this publication but no liability can be accepted for any errors or omissions.

Publication CDN 994
Printed in Canada

Table of Contents

General Information		4
Final Selection of Bearing and Pillow Block		5
Seal Information		6
Location of Bearings in Pillow Blocks		15
Basic Mounting Procedures		16
Lubrication		30
Shaft Tolerances for Adapter Mounting		38
Cap Bolt Tightening Torque Valves		39
Radial Internal Clearance of Spherical Roller Bearings		40
Mounting of Spherical Roller Bearings with Tapered Bore		42
Split Pillow Block Housing Safe Loads		44
Shaft Length in Housings with One End Closed		52
Axial Displacement of CARB® Toroidal Roller Bearings		54
SNL	Adapter Mount Assemblies	56
	Cylindrical Mount Assemblies	90
	Large Bore Assemblies	106
SAFD	Adapter Mount of Imperial Assemblies	120
	Adapter Mount of Metric Assemblies	136
	Cylindrical Mount Assemblies	142
SAF	Adapter Mount Assemblies	148
	Cylindrical Mount Assemblies	168
SDCD	Adapter Mount Assemblies	182
	Cylindrical Mount Assemblies	202
Take-UP	TY Design	220
	TU Design	228
Solid Steel Blocks		230
Flanged Units	(F) Square design	234
	(FC) Round design	236
Accessories	Locknuts, Washers, Adapter and Withdrawal sleeves	240
Bearings		295
Conversion Charts	Metric/Imperial, Celsius/Fahrenheit	311

General information

Some Words About SKF Pillow Blocks (split housing)

SKF's complete line of ball and roller bearings and pillow block housings is adaptable to every industrial purpose and offers these outstanding performance advantages:

Low Friction Characteristics
Inherent Self-Alignment
Ease of Assembly
No Adjustment
Infrequent Lubrication
Prevents Drips and Leaks
No Intrusion of Abrasive and Corrosive Matter
Economical, Trouble-Free Operation

SKF bearing housings are made of grey cast iron, ductile iron or cast steel. The bearing seating of the housing is machined to tolerances such that a loose fit of the bearing outer ring is assured and in most cases the seating width is such that the bearing has axial freedom. Dimensional inaccuracies, slight positioning errors in mounting and thermal elongation of the shaft can be accommodated in the pillow block housing itself.

Axial location of the bearings is achieved by inserting the fixing rings specified in the housing tables. If only one ring is to be used with the bearing having an adapter sleeve, the fixing ring should be positioned on the same side of the bearing as the locknut. The bearing is then displaced from its centre position in the housing by the distance equal to half the fixing ring width.

Pillow block housings shown in the housing tables are horizontally split and are designated for use with self-aligning ball bearings, spherical roller or CARB with either a tapered bore for mounting on a sleeve or with a cylindrical bore. The elongated (slotted) bolt holes in the housing base permit slight adjustments to be made to position the pillow block. The housings are fitted with dowel pins, or the mating surfaces may be stepped to ensure correct location of the associated **caps and bases, which are NOT interchangeable**. Most housings are now stamped with serial numbers on the cap and base to assist.

Pillow block housing material

SKF pillow blocks are usually made of cast iron and are mainly intended for grease lubricated ball or roller bearings.
For extra heavy-duty applications, ductile iron or cast steel pillow blocks are available.

Material	Specification	Ultimate tensile strength		Yield Strength		Minimum Elongation
		psi	MPa	psi	MPa	%
Cast Iron	ASTM A48 Grade 35 GG20 ISO/DIS185 Grade 200	35000	240	-	-	-
Cast Steel	ASTM A27 Grade 65-35	65000	450	35000	240	24
Ductile Iron	ASTM A536 Grade 65-45-12	65000	450	45000	310	12

The methods of bearing and housing selection we recommend must only be used for general or standard applications. Where conditions such as high thrust loads, shock loads, extreme temperatures and speeds prevail consult SKF for detailed recommendations.

Contributing factors:

1. Bearing radial loads or combined loads (radial and thrust) follow recommendations shown in the SKF General Catalogue 6000 for the calculation of bearing equivalent loads.
2. Speed (rpm) at which the bearing will operate.
3. Required minimum life for the bearing from the table below:

Guide to values of requisite basic rating life L_{10h} for different classes of machines

Class of Machine	L_{10h} operating hours	
Household machines, agricultural machines, instruments, technical apparatus for medical use	300...	3 000
Machines used for short periods or intermittently: Electric hand tools, lifting tackle in workshops, construction machines	3 000...	8 000
Machines to work with high operational reliability during short periods or intermittently: Elevators, cranes for packaged goods, slings or drums, bales, etc.	8 000...	12 000
Machines used for 8 hours a day but not always: Gear drives for general purposes, electric motors for industrial use, rotary crushers	10 000...	25 000
Machines used for 8 hours a day and fully utilized: Machine tools, woodworking machines, machines for the engineering industry, cranes for bulk materials, ventilator fans, conveyor belts, printing equipment, separators and centrifuges	20 000...	30 000
Machines for continuous use 24 hours per day: Rolling mill gear units, medium sized electrical machinery, compressors, mine hoists, pumps and textile machinery	40 000...	50 000
Wind energy machinery, including main shaft, yaw, pitching gear box & generator bearings	30000...	100 000
Water works machinery, rotary furnaces, cable stranding machines, propulsion machinery for marine vessels	60 000...	100 000
Large electrical machinery, power generation plant, mine pumps and mine ventilators fans, tunnel shaft bearing for marine vessels	>100 000	

4. Based on the answers to #'s 1, 2 & 3 above, select the most suitable bearing from life, load and speed tables on pages 294 through 309. Be sure to check that the bearing and seal selected will operate at the required speeds shown on pages 8 and 9.

General information on seals

There are many different types of seal designs for use in SKF Pillow Blocks. Many alternative choices are available to the user to ensure that the correct or most suitable solution will be found to meet the condition surrounding a particular application.

If a contact (rubbing) seal is selected, care must be taken with regard to the surface finish of the shaft. It is recommended that the shaft surface roughness does not exceed 125 RMS (Ra: 3.2µm ISO N8)

Seal selection	G - Seal TSN .. G	L - Seal TSN .. L Metric only	V-Ring Seal TSN .. A	Felt Seal TSN .. C	Labyrinth TSN .. S	Taconite TSN .. ND	Triple Ring Seal LER/LOR (P)
Suitable Properties							
Temperature	-40°C/ -40°F +100°C/212°F	-40°C/ -40° F +100°C/212°F	-40°C/ -40°F +100°C/212°F	-40°C/ -40°F +100°C/212°F	-50°C / -58°F +200°C / 392°F	-40°C / -40°F +100°C / 212°F	LOR 120°C / 248°F LER/LORP 200°C
Peripheral Speed	8m/sec 1600 ft/min	13m/sec. 2600 f/min	12m/s / 2400 ft/min[1] 7m/s / 1400 ft/min	4m/s 800 ft/min	Same as Bearing	12m/s 2400ft/min	Same as Bearing
Misalignment Degrees	0.5-1°	<100mm 1° >100mm 0.5°	1-1.5°	0.5°	0.3°	0.5°	0.3°
Grease Relubrication	4 m/s [3] 800ft/min	4 m/s [3] 800ft/min	[2]				
Oil Lubrication							
Low Friction							
Non-locating Bearing							
Vertical Arrangement			[4]				
Serviceability							

Sealing Ability Against

Dust, Fine Particulate contaminants							
Coarse Particulate Contaminants							
Abrasive Contaminants							
Liquids when Sprayed							
Direct Sunlight							

1.) When V-ring axially supported
2.) If appropriate components are used: ASNA .. V
3.) When using housing with grease escape hole (suffix V)
4.) When the V-ring of the lower seal is mounted inboard

Less Suitable
Very Good
Not Suitable
Normal

LOR (P) c/w contact element B-10785* or B-10724*	Triple Ring Seal TS	Taconite Seal TER-C	Taconite Seal TER-CV	Labyrinth Seal TSNC-E	Labyrinth Seal TSDC-E	Labyrinth Seal TSNC-D	Labyrinth Seal TSDC-D
-40°C/-40°F +100°C/+212°F	-40°C/-40°F +100°C /212°F	-40°C/-40° F +100°C/212°F	-40°C/-40°F +100°C/212°F	-40°C/-40°F +100°C/212°F	-40°C/-40°F +100°C/212°F	-40°C /-40°F +100°C/212°F	-40°C /-40°F +100°C/212°F
See Footnote	Same as bearing	Same as bearing	12m/s 2400 ft/min	Same as bearing	Same as bearing	12m/s 2400ft/min	12m/s 2400ft/min
0.3° / 0.3°	0.3°	← Consult SKF Engineeing →					

*B-10724 is polyurethane and is rated for 120°C maximum and speeds must be reduced to those on the following pages.
B-10785 is made of 10% graphite filled PTFE and can run at the speed of the bearing. With the LORP seal it can accomodate temperatures of 200ºC.

Speed limits for pillow block seals (rpm)

Non Contact Seals		Contact Seals							
Shaft Dia. in/mm	LER, LOR, TS, TER-C TSNC-E, TSDC-E LOR or LORP c/w B-10785 r/min.	LOR c/w B-10724	TER-CV TSNC-D TSDC-D	TER TER-V	TSN-G	TSN-L	TSN-A	TSN-C	TSN-ND
3/4 20 15/16 25 1	Seal speed limit is the same as speed rating of bearing	- - - - -	- - - - -	- - - - -	7840 7640 6420 6110 6020	- 12 400 - 9930 -	6860 6680 5620 5350 5270	3920 3820 3210 3060 3010	- 11465 - 9172 -
30 1 3/16 1 1/4 35 1 7/16		- - - - -	- - - - 6280	- - 2250 - 2175	5090 5070 4810 4360 4190	8270 - - 7085 -	4460 4440 4210 3820 3660	2550 2540 2410 2180 2090	7643 - - 6551 -
1 1/2 40 1 11/16 1 3/4 45		- - - - -	6018 - 5350 5159 -	2175 - 1800 1800 -	4010 3820 3570 3440 3390	- 6200 - - 5500	3510 3340 3120 3010 2970	2010 1910 1780 1720 1700	- 5732 - - 5096
1 7/8 1 15/16 50 2 2 1/16		- - - - -	4815 4659 - - 4377	1575 1575 - - -	3210 3100 3060 3030 2920	- - 4975 - -	2810 2720 2670 2650 2550	1600 1550 1530 1520 1460	- - 4586 - -
55 2 3/16 2 1/4 60 2 7/16		- 2 600 - - 2350	- 4127 4012 - 3704	- 1400 1400 - 1250	2780 2750 2670 2550 2470	4520 - - 4145 -	2430 2410 2340 2230 2160	1390 1380 1340 1270 1240	4169 - - 3822 -
2 1/2 65 2 11/16 2 3/4 70		2350 - 2150 2150 -	3611 - 3359 - -	- 1250 - 1150 1150	2410 2350 2240 2190 2180	- 3820 - - 3540	2110 2060 1960 1920 1910	1200 1180 1120 1100 1090	- 3528 - - 3276
2 15/16 75 3 80 3 3/16		1950 - 1950 - 1800	3073 - - - 2832	1050 - 850 - 950	2050 2040 2010 1910 1890	- 3315 - 3100 -	1800 1780 1760 1670 1650	1030 1020 1000 960 940	- 3057 - 2866 -
3 1/4 85 3 7/16 3 1/2 90		1800 - 1650 1650 -	2778 - 2626 2579 -	- 925 - 900 900	1850 1800 1750 1700 1700	- 2925 - - 2760	1620 1570 1530 1500 1490	920 900 880 860 850	- 2698 - - 2548
3 11/16 95		1650 -	2448 -	- -	1630 1610	- 2615	1430 1410	820 800	- 2414

Non Contact Seals		Contact Seals							
Shaft Dia. in/mm	LER, LOR, TS, TER-C TSNC-E, TSDC-E LOR or LORP c/w B-10785 r/min.	LOR c/w B-10724	TER-CV TSNC-D TSDC-D	TER TER-V	TSN-G	TSN-L	TSN-A	TSN-C	TSN-ND
100 3 15/16 4 4 3/16 4 1/4	Seal speed limit is the same as speed rating of bearing	- 1450 1450 1350 1350	- 2293 - 2156 2124	- 775 - - -	1530 1530 1500 1440 1420	2485 - - - -	1340 1340 1320 1260 1240	760 760 750 720 710	2293 - - - -
110 4 7/16 4 1/2 115 120		- 1300 1300 - -	- 2034 2006 - -	- 700 675 - -	1390 1360 1340 1330 1270	2260 - - 2160 2065	1220 1190 1170 1160 1110	690 680 670 660 640	2085 - - 1994 1911
125 4 15/16 5 130 5 3/16		- 1150 1150 - 1075	- 1828 - - 1740	- - - - 590	1220 1220 1200 1180 1160	1980 - - 1920 -	1070 1070 1050 1030 1010	610 610 600 590 580	1834 - - 1764 -
5 1/4 135 5 7/16 5 1/2 140		1075 - 1050 1050 -	1720 - 1660 1641 -	- - 560 - -	1150 1130 1100 1090 1090	- 1835 - - 1770	1000 990 970 960 960	570 570 550 540 550	- 1699 - - 1638
145 150 5 15/16 6 155		- - 950 950 -	- - 1520 1505 -	- - 515 - -	1050 1020 1015 1000 990	1705 1660 - - 1610	920 890 885 875 860	530 510 508 500 490	1581 1529 - - 1479
160 6 7/16 165 6 1/2 170		- 875 - 875 -	- 1402 - 1389 -	- 475 - - -	960 940 930 930 900	1560 - 1510 - 1460	840 820 810 810 790	480 465 460 460 450	1433 - 1390 - 1349
6 3/4 6 15/16 7 180 7 3/16		825 825 825 - 800	1337 1301 - - 1256	- 440 435 - 425	890 870 - - -	- - - - -	785 760 - - -	445 435 - - -	- - - 1274 -
200 7 15/16 8 7/16 8 1/2 220		- 725 680 680 640	- 1137 1070 1062 -	- 385 360 355 -	- - - - -	- - - - -	- - - - -	- - - - -	1146 - - - 1042

Standard seals

Double-lip seal, Type G

Double-lip G seals are made of polyurethane, a wear-resistant material which has good elastic properties. The seals are intended for grease lubrication and can be used at peripheral speeds of up to 8m/s (1600 ft/min). The permissible angular misalignment is approximately 1° for shaft diameters up to approximately 100 mm (3 $^{15}/_{16}$") and 0.5° for larger sizes. The seal counterface on the shaft should be ground and the surface roughness Ra should not exceed 3.2µm/125 RMS. The axial movement of the shaft relative to the housing is not limited when double-lip seals are used. Double-lip G seals are always supplied in packs of two. When a housing is used for a shaft end, i.e. with one end cover, one of the seals will be left over and can be kept as a spare. The double-lip G seals are identified by the designation prefix TSN followed by the size identification and the suffix G, e.g. TSN 511 GA.

Double-lip seal, Type L

Double-lip L seals are made of thermo plastic elastomer (TPE) and can be used for peripheral speeds of up to 13 m/s (2600 ft/min). In all other aspects they are the same as the G seal. However they are only available for metric shafts in housing sizes 507 - 522, as of March 2007. The double-lip L seals are identified by the designation prefix TSN, followed by the size identification and the suffix L, e.g. TSN 511 L.

V-ring seals, Type A

The V-ring seal consists of a V-ring and a sheet steel sealing washer with vulcanized rubber lip which fits into the sealing groove in the housing. The washer is protected against corrosion. The V-rings are made of nitrile rubber (NRB) and have a sealing lip which seals axially against the sealing washer. The V-ring "body", which sits tightly on the shaft and rotates with it, also serves as a flinger. V-ring seals provide efficient sealing even under difficult operating conditions such as high speeds and roughly finished shafts. They can be operated at peripheral speeds in excess of 7 m/s (1400 ft/min) provided that the V ring is prevented from moving or lifting from the shaft by a support ring. Consult SKF for recommended support rings. The permissible angular misalignment for V-ring seals is approximately 1.5° for a 50 mm shaft, decreasing to approximately 1° for a shaft diameter of 150 mm and above. The axial movement of the shaft relative to the housing is limited to ±1 mm, for shaft diameters up to 65 mm, and to approximately ±1.2 mm for larger shaft diameters. V-ring seals are always supplied in packs of two. When a housing with one end closed is used, one of the seals will be left over and can be kept as a spare. The V-ring seals are identified by the designation prefix TSN followed by the size identification and the suffix A, e.g. TSN 511 A.

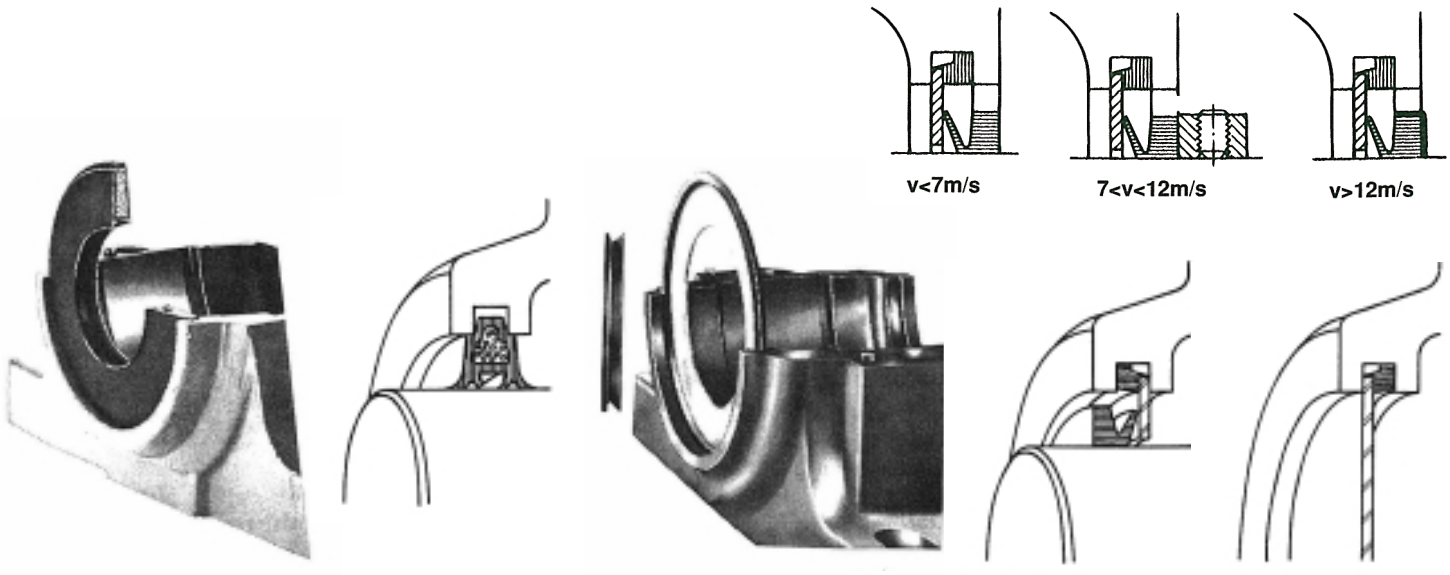

Felt ring seals Type C

Felt ring seals are simple but efficient seals for use with grease lubrication. They can be operated at peripheral speeds of up to 4 m/s (800 ft/min). The seals can be used at higher speeds, but a small gap will form between the felt and the shaft, and as a result the seals become non-rubbing gap-type seals.

For pillow block housings with bearings on adapter sleeves and shafts not exceeding a surface roughness of Ra 3.2µm, the felt ring seals are split, meaning that oil-impregnated felt is inserted into light alloy half-rings. The seals should be inserted into the grooves of the housing. The rubber O-section cords should be put into the grooves first as they prevent the seal rings from turning.

SNL pillow block housings for bearings mounted on the cylindrical seatings of stepped shafts, sizes 205 to 218 inclusive, can also be supplied with felt seals. In this case the seals consist of loose felt strips which can be inserted into the sealing grooves. Before mounting the FS felt strips they should be left to soak for a few minutes in hot oil. The permissible angular misalignment for felt seals is approximately 0.5°. The seal counterface on the shaft should be ground and the surface roughness should not exceed Ra 3.2µm (125 RMS). The axial movement on the shaft relative to the housing is not limited when felt seals are used. The ready-to-mount felt ring seals (in light alloy half-rings) are always supplied in packs of two. When a housing is used at a shaft end, i.e. with one end cover, one of the seals will be left over and can be kept as a spare. The felt ring seals are identified by the designation prefix TSN followed by the size identification and the suffix C, e.g. TSN 511 C.

For applications with spherical roller or CARB bearings that are to operate at continuously high temperatures of up to approximately +200°C (392°F), SKF graphited FSB sealing strips made of aluminum boron silicate can be used. With these, the rubber O-section cords are replaced by fluoro rubber O-section cords. These seals are identified by the suffix CB, e.g. TSN 511 CB.



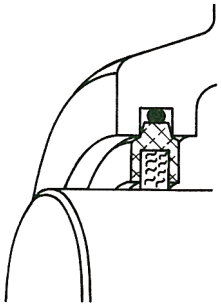



Felt Strips

Labyrinth Seal (Taconite Service Seal)

Taconite Service Seals
Types: TER, TER-V, TER-C and TER-CV

These purgeable seals were designed for use in very dirty environments. The TER..C and the TER..CV seals consist of two pieces: one that fits into the standard seal groove of the housing and another that is attached to the shaft. The single-piece TER and TER..V seals simply fit into the standard seal groove of the housing. The additional contact elements are as follows:

TER..C - no contact element
TER..CV - a V-ring seal
TER - a felt strip and rubber contact seal
TER..V - a felt strip and V-ring seal

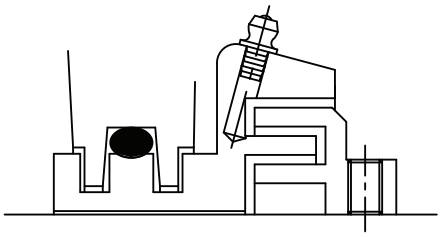

TER 5xx -C

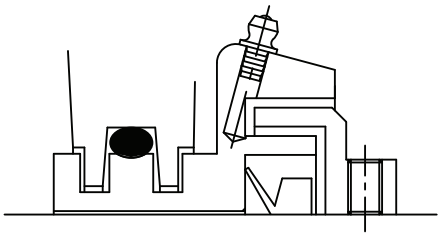

TER 5xx -CV

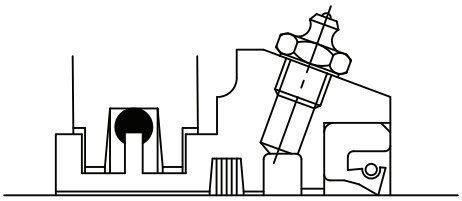

TER xxx

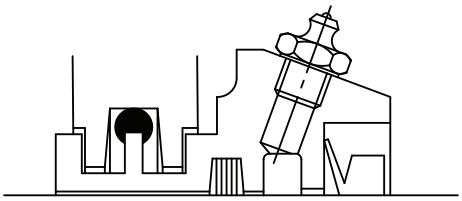

TER xxx -V

Consult SKF for availability.

Triple Ring Seals Types LER, LOR, LORP, TS, S (Including LOR & LORP with contact elements)

A labyrinth created between the rotating seal ring and its matching hub grooves results in an efficient seal, particularly if the labyrinth is filled with grease. The sliding fit of the rotating seal ring on the shaft ensures that it will automatically find its own proper location relative to the stationary hub grooves. For larger shaft diameters an O-sectioned cord is inserted between the seal ring and the shaft to ensure ring rotation and to avoid possible lubricant leakage.

The maximum permissible misalignment between the shaft and housing must be restricted to 0.25°.

To compliment the LOR and LORP units and improve sealing, SKF has introduced contact elements that fit into the truncated middle ring on the O.D. of the seal. The B-10724-xxx is made of polyurethane for temperatures of up to 120ºC, while the B-10785-xxx is made of 10% graphite-filled PTFE for temperatures of up to 200ºC and for speed limits equal to that of the bearing.

LOR + B-10724-xxx = improved sealing
LOR + B-10785-xxx = improved sealing and speed
LORP + the B-10785-xxx = improved sealing, speed and higher temperatures

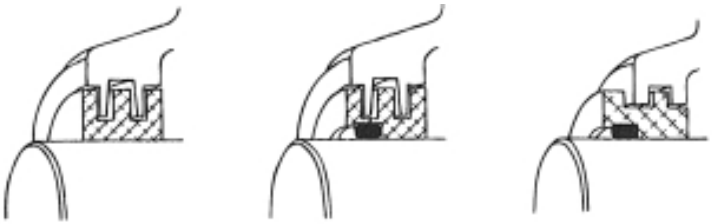

LER
ER

TS

S

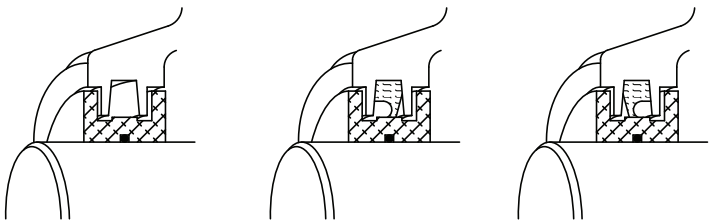

LOR (P)

LOR (P) + CONTACT ELEMENT

Labyrinth Seals Type D and E

Extreme service seals of types D and E were initially developed for the mining industry, where fine abrasive dust was prevalent (e.g. taconite). They have since found usage in the forest, pulp and paper, and other industries where water and water-laden debris prevail. They are most commonly used in the, SDCD and SNL series of housings, which have additional grease fittings to allow the seals to be periodically purged. Their design offers the distinct advantage that housing caps may be removed for maintenance inspection of the bearings with the seals remaining undisturbed.

NOTE: SNL and SSNLD housings must be modified to suffix MC106 when using TSNC-D, TSNC-E or MC17 seals.

SAFD and FSAFD must be modified to MC14 when using TSNC-D and TSNC-E. These seals are available on special order only.



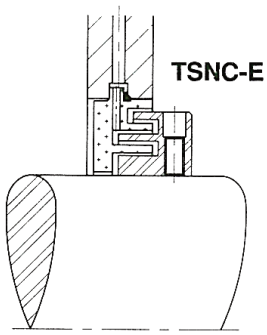

TSNC-E

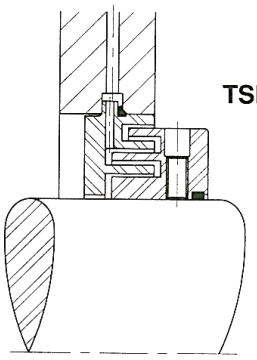

TSDC-E



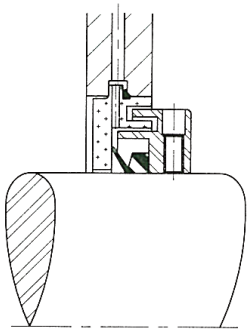

TSNC-D

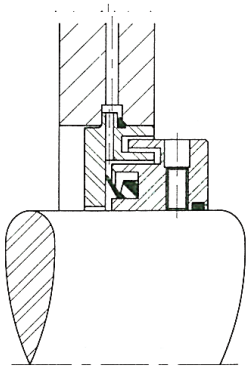

TSDC-D

If the bearing is to be held (located), fixing rings are inserted between the side faces of the outer ring and the housing shoulders. If an adapter sleeve is used to secure the bearing to the shaft and only one fixing ring is required, it should be placed on the same side of the bearing as the locknut. The bearing is then displaced from its central position in the housing by a distance equal to half the fixing ring width.

# of Rings	Location of Rings
1	on the same side as the sleeve nut
2	one on each side of the bearing
3	two on the same side as the sleeve nut
4	two on each side of the bearing

FRB 16.5/150

Fixing ring with a width of 16.5mm	Fixing ring for a housing bore of 150mm

NOTE:

As opposed to a held bearing, a free bearing will be mounted without fixing rings. The bearing, positioned in the centre of the bearing seat in the pillow block housing, will ensure proper lubrication as well as enough room for shaft expansion and contraction.

SAF blocks shown in the tables with one fixing only are now also being offered with two fixing rings to centre the bearing. The suffix reads "HH".

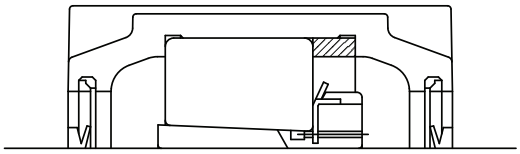

1 RING

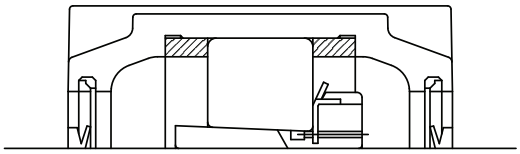

2 RINGS

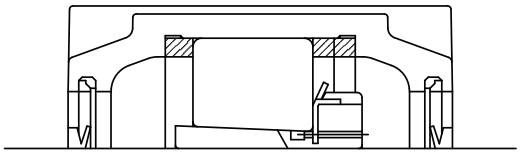

3 RINGS

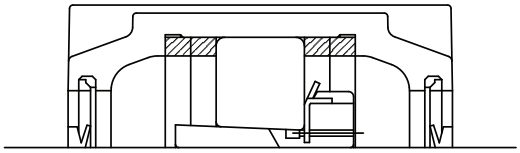

4 RINGS

Basic procedures for mounting bearings and seals

Adapter sleeve mounting

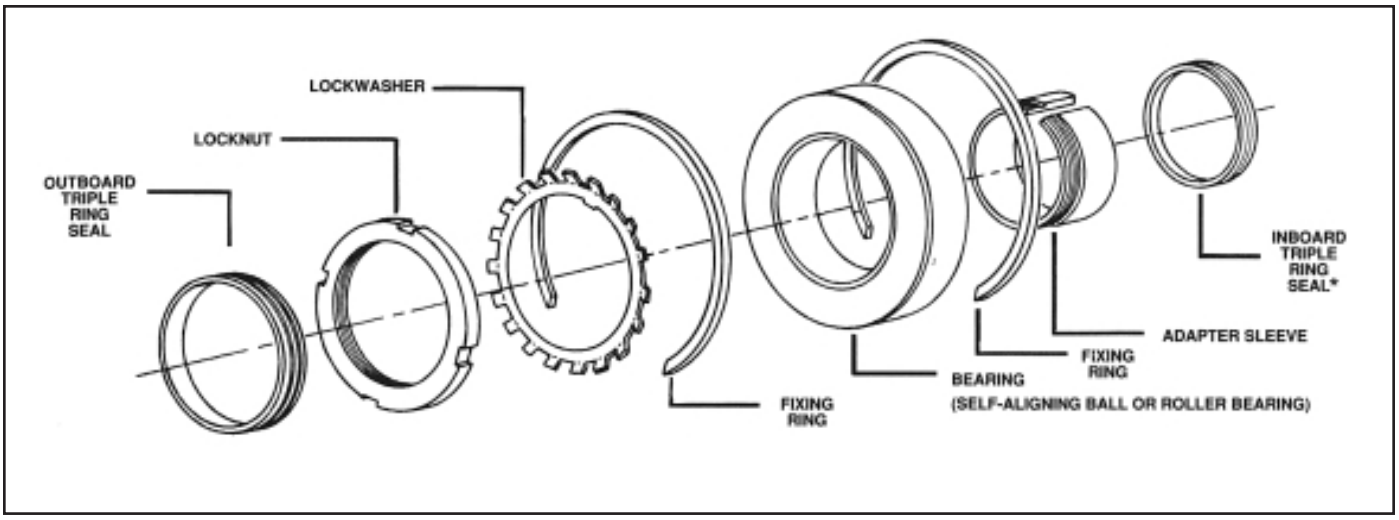

Cylindrical bore mounting

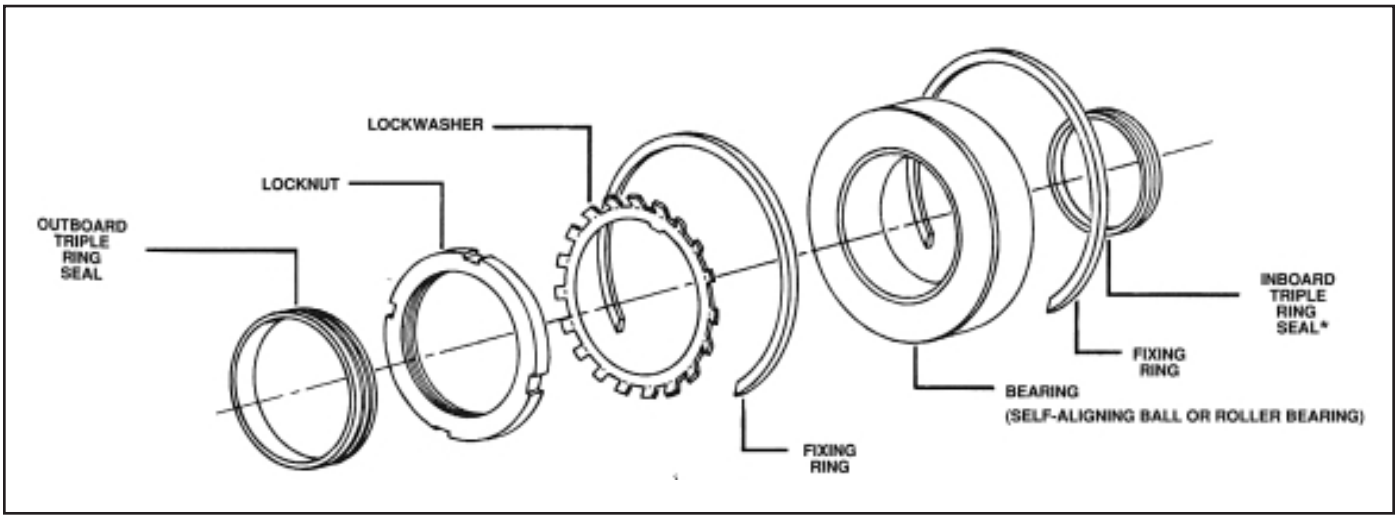

*Note: Do not forget to mount this seal ring first!

Preparation before Mounting

- Do not unwrap the bearing until ready for mounting. Do not remove the protective coating from the bearing. It will mix with any petroleum-based grease or oil that is to be used as the lubricant.
- Clean the shaft and housing. Remove all burrs and sharp edges.
- Check that the shaft diameter is to the recommended tolerance.
- Read and become familiar with the bearing mounting procedure and the installation instructions to be used for this assembly.

NOTE: Caps and bases of housings are not interchangeable. Most SNL and SAF blocks are now marked with cap and base serial numbers to assist.

Adapter Sleeve Mounting – Spherical roller and CARB® Bearings

All spherical roller and CARB bearings with tapered bores for mounting on adapter sleeves have to be driven up the taper sufficiently to achieve the proper reduction of internal clearance.

The unmounted clearance of each bearing must be measured and recorded. To do this, stand the bearing on the bench and insert progressively thicker feeler gauges the full length of the roller between the unloaded roller and the outer ring at the top location. Never roll the rollers over the gauges, as the wrong values will be obtained.

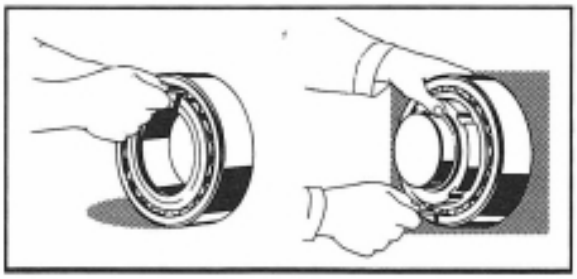

For an unmounted bearing, measure radial clearance at the top. For a mounted bearing, measure radial clearance at the bottom.

Position the adapter sleeve (less the locknut and lockwasher) on the shaft in the correct position for the proposed bearing mounted centre line. A light smear of clean spindle oil applied to the sleeve outside diameter results in easier mounting and removal of the bearing.

Mount the bearing on the adapter with the large bore side of the inner ring matching the large side of the taper on the adapter sleeve. With the bearing finger-tight on the adapter, locate the bearing and adapter to the proper axial location on the shaft. Do not apply the lockwasher, as the drive-up procedure could damage it. To avoid damage to the bearing, it is most important that during this and subsequent operations the shaft be "blocked up" such that the bearing is unloaded.

Lubricate the chamfered face and the threads of the locknut (use Molykote for larger sizes), then apply the locknut with the chamfered face toward the bearing and tighten the nut until the sleeve is snug on the shaft. Wrenches are available for bearing drive-up (page 249). For larger bearings, hydraulic mounting nuts are recommended to obtain the required internal clearance reduction. Refer to pages 256-257.

Never tighten the locknut with a hammer and drift. The locknut can be damaged and chips can enter the bearing. Continue tightening the locknut and measuring the internal clearance with feeler gauges until the reduction in internal clearance is the amount shown in the table on pages 44 and 45. Remove the locknut or hydraulic nut. Mount the lockwasher with its inner prong located in the slot of the adapter sleeve and with its outer tabs leaning away from the bearing. Re-apply the locknut and tighten until it is firmly seated against the lockwasher. Find the lockwasher tab that is nearest to one of the slots in the locknut. If the tab is past the slot, do not loosen but tighten the nut until the tab can be bent into a slot.

For large size adapter sleeves (size 44 and up) the use of the oil injection method is standard practice. For these adapter sleeves, the lockwasher is replaced with a lockplate. In these cases, after the locknut is tightened to achieve the proper reduction of the internal clearance in the bearing, take the lock-plate and place its prong in the slot of the adapter sleeve. Note how much the locknut will have to be tightened for the holes in the locknut to align with the holes in the lockplate. Reverse the lockplate and observe again how much the locknut will have to be tightened for the holes in the locknut to align with the holes in the lockplate. The lockplate is to be placed in the position requiring the least tightening to align the two sets of holes. When the locknut has been tightened to achieve this, then insert and tighten the cap screws. Lock the cap screws with lockwire through the holes in the heads. Do a final check on the mounted internal clearance of the bearing.

Basic Procedures for Mounting Bearings and Seals

Adapter Sleeve Mounting – Self-Aligning Ball Bearings

Position the adapter sleeve (less the locknut and lockwasher) on the shaft in the correct position for the proposed bearing mounted centre line. A light smear of clean spindle oil applied to the sleeve outside diameter results in easier mounting and removal of the bearing.

Mount the bearing on the adapter sleeve with the large bore side of the inner ring matching the large side of the taper on the adapter sleeve. With the bearing finger-tight on the adapter, if necessary, relocate the bearing and adapter sleeve to the proper axial location on the shaft. Do not apply the lockwasher as the drive-up procedure could damage it. To avoid damage to the bearing it is most important that during the subsequent operations the shaft is "blocked up" such that the bearing is unloaded. Lubricate the chamfered face and threads of the locknut (Molykote on larger sizes) then apply the locknut with the chamfered face toward the bearing. Just tighten the nut with an appropriate wrench until the sleeve does not move on the shaft and the bearing does not rotate on the shaft. Finally rotate the locknut through the "turning angle" shown below.

CAUTION: A loose adapter sleeve can lead to the inner ring turning on the adapter sleeve and/or the adapter sleeve turning on the shaft. But to ensure that the nut is not excessively tight, make certain the outer ring of the bearing rotates freely.

When mounting a normal clearance bearing, swiveling the outer ring will result in a slight drag. If the bearing has a C3 clearance, the outer ring will swivel freely. Remove the locknut and mount the lockwasher with the inner prong located in the slot of the adapter sleeve and the tabs leaning toward the locknut. Re-apply the locknut and tighten until firmly seated against the lockwasher. Find the lockwasher tab that is nearest to one of the slots in the locknut. If the slot is past the tab do not loosen but tighten the nut until a tab can be bent into a slot.

The SKF drive-up method is a distinct advantage when mounting self alingning and CARB bearings on adapter sleeves.

Cylindrical Bore Mounting – Self-aligning Ball or Spherical Roller Bearings

Small bearings – Bore size 50mm and smaller

Apply a coat of light oil to the shaft and bearing bore. Fit a clean tube with one end squared and bore slightly larger than the bearing bore against the bearing inner ring. With the bearing square on the shaft, apply pressure to the tube using a press. The bearing must be seated firmly against the shaft shoulder. The SKF TMFT 36 mounting tool is ideal for smaller bearings.

Mount the lockwasher with the inner tab located in the shaft keyway and with the outer tabs leaning away from the bearing, apply the locknut with the chamfered face lubricated and facing the bearing. Tighten with an appropriate wrench until all components are locked up solidly to the shaft shoulder. It may be necessary to further tighten the nut to engage a washer tab with a slot in the locknut. A very small movement of the nut will usually align a tab with a slot.

Large Bearings – Bore Size 50 mm and larger

These bearings are not easily pressed onto the shaft and should therefore be heated using a temperature controlled oven, hotplate or electric induction heater which is environmentally friendly. In cases where the bearings are too large for the above, an oil bath with a mixture of 10% to 15% soluble oil in water, heated to approximately 100ºC may be used. The bearing must be supported to isolate it from direct contact with the bottom of the tank to avoid localized heating and damage to the bearing. After heating, mount the bearing on the shaft firmly against the shaft shoulder. Immediately apply the locknut and tighten to prevent the bearing from shrinking away from its proper position against the shaft shoulder. When the bearing has cooled, remove the locknut. Mount the lockwasher with its inner prong located in the shaft keyway and with its outer tabs leaning away from the bearing. Apply the locknut with the face lubricated and tighten with the appropriate wrench until all components are locked up solidly to the shaft shoulder. It may be necessary to further tighten the nut to engage a washer tab with a slot in the nut. A very small movement of the nut will usually align a tab with a slot.

Mounting self-aligning ball bearings with a tapered bore					
Bore Diameter d	Tightening angle	Axial Drive-up	Bore Diameter d	Tightening angle	Axial Drive-up
mm	α	s	mm	α	s
20	80	0.22	65	80	0.40
25	55	0.22	70	80	0.40
30	55	0.22	75	85	0.45
35	70	0.30	80	85	0.45
40	70	0.30	85	110	0.60
45	80	0.35	90	110	0.60
50	80	0.35	95	110	0.60
55	75	0.40	100	110	0.60
60	75	0.40	110	125	0.70
			120	125	0.70

For housings mounted at the ends of shafts, the opening must be fitted with an end cover to prevent the entry of contaminants into the bearing.

SNL housings size 32 and under, are equipped with end covers made of plastic and are suitable for operating temperatures in the range of –40º to +110ºC (-40º to +230ºF). For higher temperatures, sheet steel end covers should be used. An end cover suffix of VZ 137 is used to indicate the steel design.

ASNH style

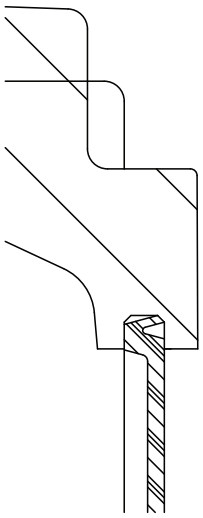

SAFD, SAF and SAFS housings use steel disc end plugs with a moulded neoprene rubber tire on the O.D. This rubber tire provides a positive seal in the groove of the housing.

EPR style

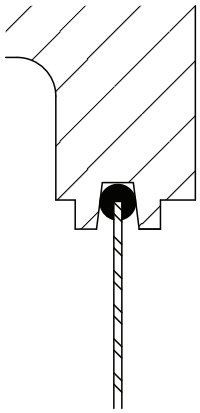

SDCD housings and SNL housings over size 32 use end covers made of cast iron or machined steel discs, which fit into the seal groove of the housing.

ETS style

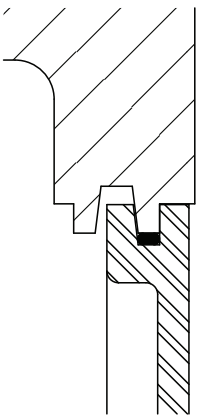

ASDC style

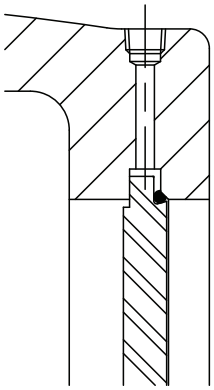

Mounting procedures for pillow block assemblies

Seal Assembly and Mounting Procedure

G-Type Seal (and L design for metric sizes in SNL 507-522 blocks)

1. The housing base is placed in position and the mounting bolts loosely fitted.
2. The halves of the seals are inserted in the housing grooves and the space between the lips of the seals is filled with grease.
3. The bearing is mounted on the shaft (directly or on an adapter sleeve) and filled with grease.
4. The shaft, complete with bearing assembly, is placed in the lower half of the housing.
5. For a held unit, the fixing rings are placed in position. For a free unit, the bearing must be located in the center of the bearing seat of the housing for proper lubrication.
6. The housing base is checked for alignment, ensuring that it is within the acceptable limits, and the mounting bolts are then slightly tightened.
7. The other halves of the seals are inserted into the cap and the space between the lips of the seals is filled with grease. For sizes 528-532 and 616-620 the seal halves must be turned so that the spigots fit in the holes of the connecting seal halves.
8. At the first charge of grease, the bearing MUST be filled with grease. (Do not wash out the protective coating.) The housing should be filled one-third to one-half full, depending on the speed. For grease quantities, refer to page 36.
9. The housing cap is fitted to the base and the cap bolts tightened to the recommended torque. (See tables on page 39.) NOTE: Caps and bases are not interchangeable. Serial numbers on the caps and bases of all SNL housings help to assure proper matching.
10. Finally the housing mounting bolts are tightened to the support.

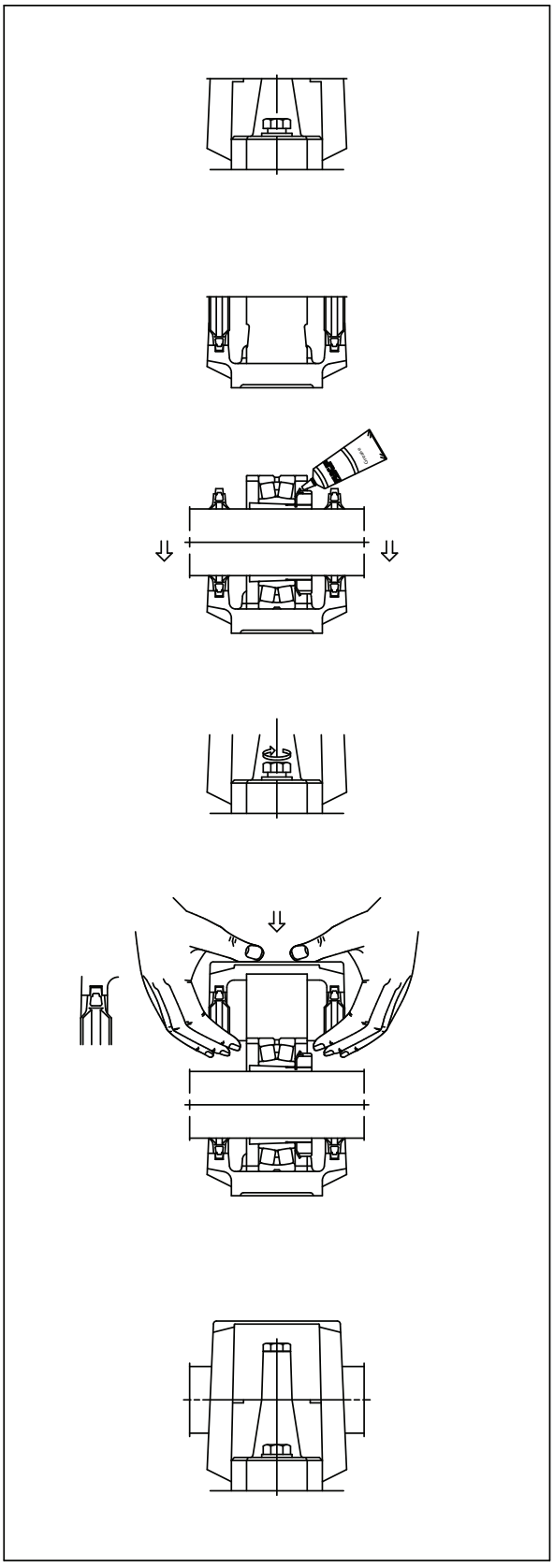

Seal Assembly and Mounting Procedure V-Ring Seal Type "A"

1. The housing base is placed in position and the mounting bolts loosely fitted.

2. One V-ring and one sheet metal washer are placed on the shaft. Care should be taken to position these correctly in relation to the housing. Do not allow the V-ring seal lip to pass through the sheet metal washer.

3. The bearing is mounted on the shaft (directly or on an adapter sleeve) and filled with grease.

4. The second V-ring and sealing washer are placed on the shaft.

5. The shaft, complete with the bearing assembly and the sealing components, is placed in the lower half of the housing.

6. For a held unit, the fixing rings are placed in position. For a free unit, the bearing must be located in the center of the bearing seat of the housing for proper lubrication.

7. The housing base is checked for alignment, ensuring that it is within acceptable limits, and the mounting bolts are then slightly tightened.

8. At the first charge of grease, the bearing MUST be filled with grease. (Do not wash out the protective coating.) The housing should be filled one-third to one-half full, depending on the speed. For grease quantities, refer to page 36.

9. The housing cap is fitted to the base and the cap bolts tightened to the recommended torque. (See tables on page 39.) NOTE: Caps and bases are not interchangeable. Serial numbers on the caps and bases of all SNL housings help to assure proper matching.

10. The outer surfaces of the sealing washers are smeared with grease and the V-rings are pushed axially along the shaft until their sealing lips are aligned and in the correct working positions relative to the sealing washers. The simplest way to move the V-rings is to use a screwdriver blade while rotating the shaft by hand.

NOTE: V-ring seals may be used for oil lubrication. The assembly shown to the right is for grease. When V-rings are used for oil, a V-ring is used on both the inside and the outside of the sealing washer. Consult SKF Engineering for details.

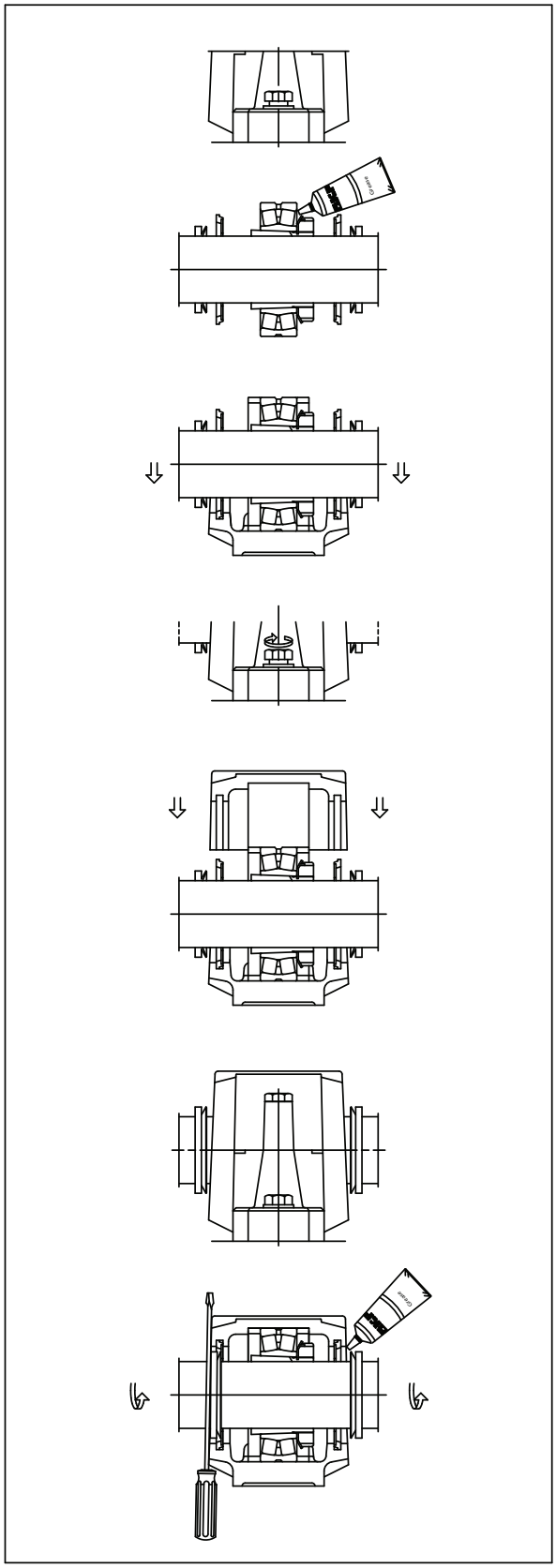

Mounting procedures for pillow block assemblies

Seal Assembly and Mounting Procedure
Felt Seal Type "C"

1. The housing base is placed in position and the attachment bolts loosely fitted.
2. The rubber O-section cords are placed in the grooves in the housing base.
3. The halves of the alloy ring with felt seals are mounted on the O-section cords in the grooves of the housing base.
4. The bearing is mounted on the shaft (directly or on an adapter sleeve) and filled with grease.
5. The shaft, complete with the bearing assembly, is placed in the lower half of the housing.
6. For a held unit, the fixing rings are placed in position. For a free unit, the bearing must be located in the center of the bearing seat of the housing for proper lubrication.
7. The housing base is checked for alignment, ensuring that the housing is within acceptable limits, and the mounting bolts are then slightly tightened.
8. The rubber O-section cords are placed in the grooves in the housing cap.
9. The felt seals with the light alloy rings are mounted on the O-section cords in the grooves of the housing cap.
10. At the first charge of grease, the bearing MUST be filled with grease. (Do not wash out the protective coating.) The housing should be filled one-third to one-half full depending on the speed. For grease quantities, refer to page 36.
11. The housing cap is fitted to the base and the cap bolts tightened to the recommended torque value. (See tables on pages 39.) NOTE: Caps and bases are not interchangeable. Serial numbers on the caps and bases of all SNL housings help to assure proper matching.
12. Finally, the mounting bolts are tightened to the support.

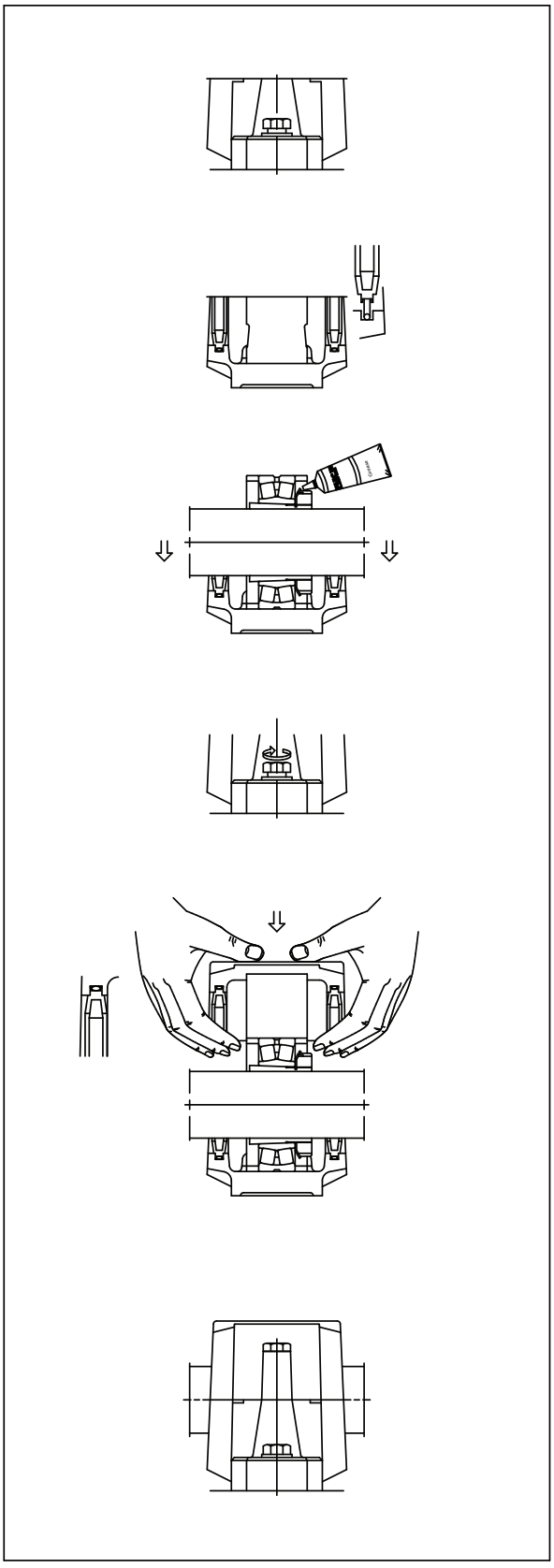

Seal Assembly and Mounting Procedure
Triple Ring Seals LER and LOR

1. The housing base is placed in position and the mounting bolts loosely fitted.

2. One labyrinth seal is placed on the shaft.

3. The bearing is mounted on the shaft (directly or on an adapter sleeve) and filled with grease.

4. The second labyrinth seal is placed on the shaft.

5. The shaft, complete with the bearing assembly and the labyrinth seals, is placed in the lower half of the housing.

6. For a held unit, the fixing rings are placed in position. For a free unit, the bearing must be located in the center of the bearing seat of the housing for proper lubrication.

7. The housing base is checked for alignment, ensuring that it is within acceptable limits, and the mounting bolts are then slightly tightened.

8. At the first charge of grease, the bearing MUST be filled with grease. (Do not wash out the protective coating.) The housing should be filled one-third to one-half full depending on the speed. For grease quantities, refer to page 36.

9. The housing cap is fitted to the base and the cap bolts tightened to the recommended torque value. (See tables on pages 39.) NOTE: Caps and bases are not interchangeable. Serial numbers on the caps and bases of most SAF housings help to assure proper matching.

10. The mounting bolts are tightened to the support.

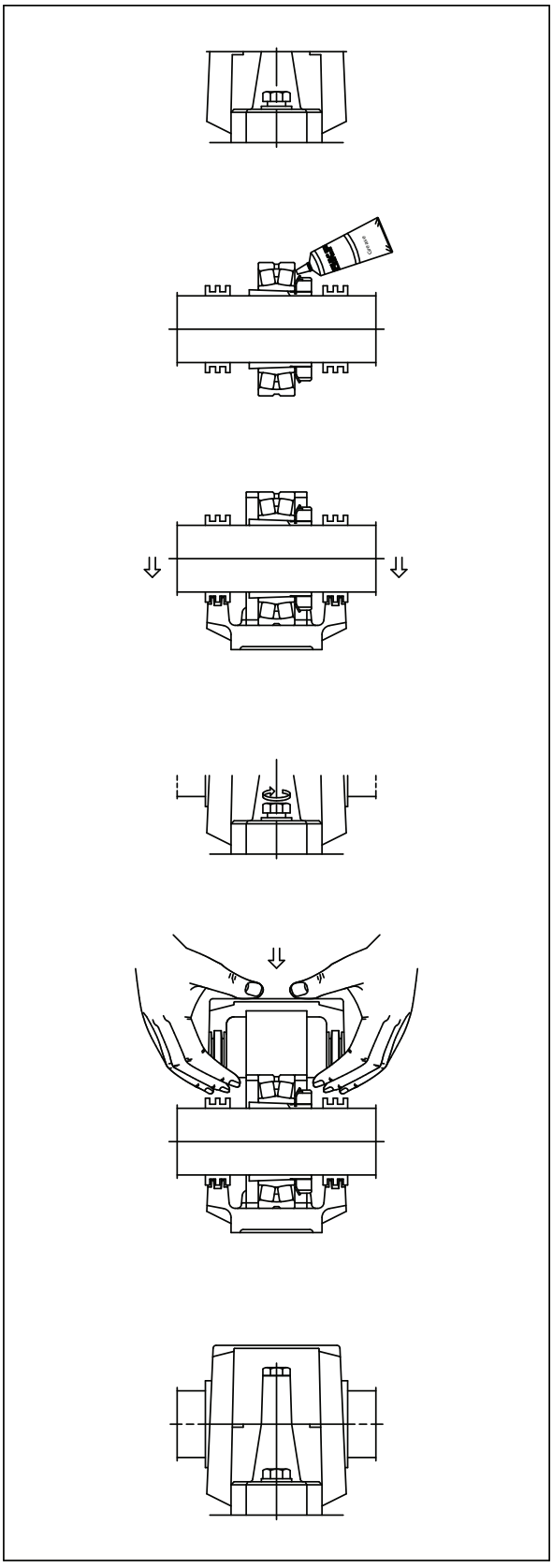

Mounting procedures for pillow block assemblies

Seal Assembly and Mounting Procedure
Labyrinth Seal
Type “S” and “TS”

1. The housing base is placed in position and the mounting bolts loosely fitted.

2. One labyrinth seal is placed on the shaft.

3. The bearing is mounted on the shaft (directly or on an adapter sleeve) and filled with grease.

4. The second labyrinth seal is placed on the shaft.

5. The shaft, complete with the bearing assembly and the labyrinth seals, is placed in the lower half of the housing.

6. For a held unit, the fixing rings are placed in position. For a free unit, the bearing must be located in the center of the bearing seat of the housing for proper lubrication.

7. The housing base is checked for alignment, ensuring that it is within acceptable limits and the mounting bolts are then slightly tightened.

8. At the first charge of grease, the bearing MUST be filled with grease. (Do not wash out the protective coating.) The housing should be filled one-third to one-half full depending on the speed. For grease quantities, refer to page 36.

9. The housing cap is fitted to the base and the cap bolts tightened to the recommended torque value. (See tables on page 39.) NOTE: Caps and bases are not interchangeable. Serial numbers on the caps and bases of all SNL housings help to assure proper matching.

10. The mounting bolts are tightened to the support.

11. Finally the silicon O-section cords are placed in the grooves of the labyrinth seals. The simplest way to mount the cords is to use a screwdriver blade while rotating the shaft by hand.

NOTE: Type S is used with SNL and SSNLD.
Type TS is used with SNL sizes over 32 and with SDCD.

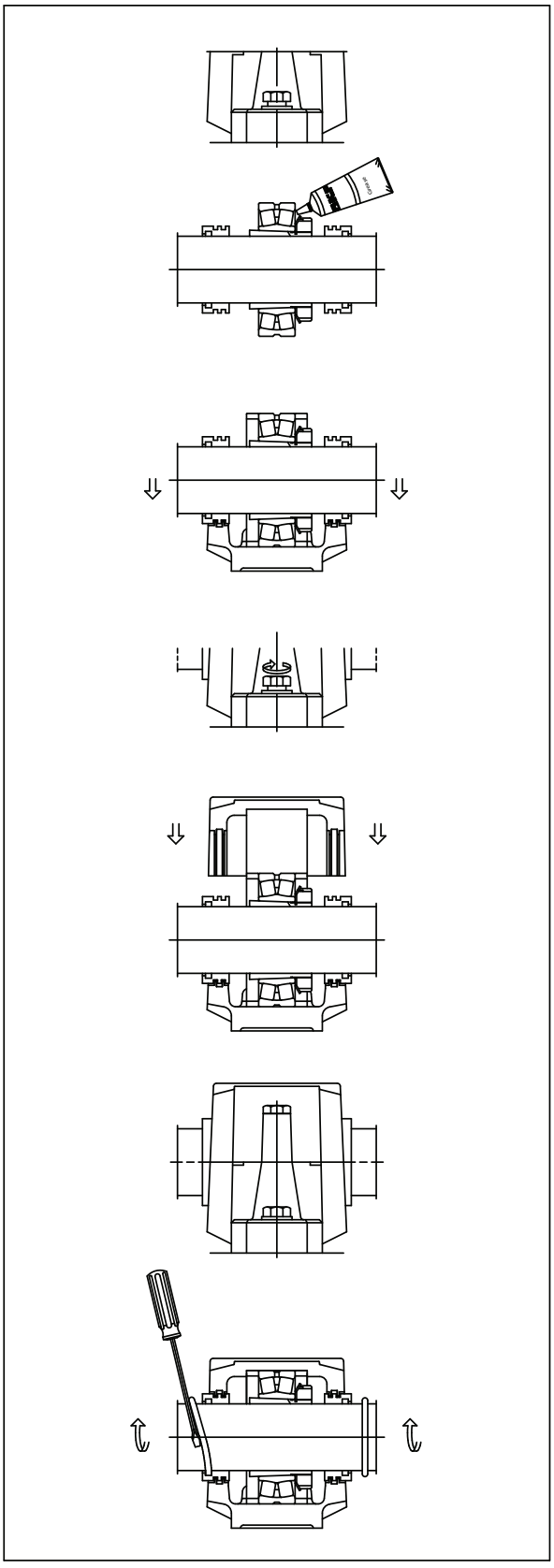

Seal Assembly and Mounting Procedure
Triple Ring Seals "LOR, LORP"
(with optional contact elements B-10724-XX or B-10785-XX)

1. The housing base is placed in position and the mounting bolts loosely fitted.

NOTE: Where contact elements are added in steps 2 and 4, the radial lip seal must be mounted on the centre ring of the triple ring seal. The radial lip seal may point in either direction, depending on the requirement: retention of grease or exclusion of contaminants.

2. One labyrinth seal is placed on the shaft, paying attention not to damage the O-ring.

3. The bearing is mounted on the shaft (directly or on an adapter sleeve) and filled with grease.

4. The second labyrinth seal is placed on the shaft, paying attention not to damage the O-ring.

5. The shaft, complete with the bearing assembly and the labyrinth seals, is placed in the lower half of the housing. In the case of an additional contact element, seat the O.D. of the radial lip contact element in the centre groove of housing hub.

6. For a held unit, the fixing rings are placed in position. For a free unit, the bearing must be located in the center of the bearing seat for proper lubrication.

7. The housing base is checked for alignment, ensuring that it is within acceptable limits, and the mounting bolts are then slightly tightened.

8. At the first charge of grease, the bearing MUST be filled with grease. (Do not wash out the protective coating.) The housing should be filled one-third to one-half full depending on the speed. For grease quantities refer to page 36.)

9. The housing cap is fitted to the base and the cap bolts tightened to the recommended torque. (See table on page 39.) NOTE: Caps and bases are not interchangeable. Serial numbers on the caps and bases of most SAF housings help to assure proper matching.

10. The mounting bolts are tightened to the support.

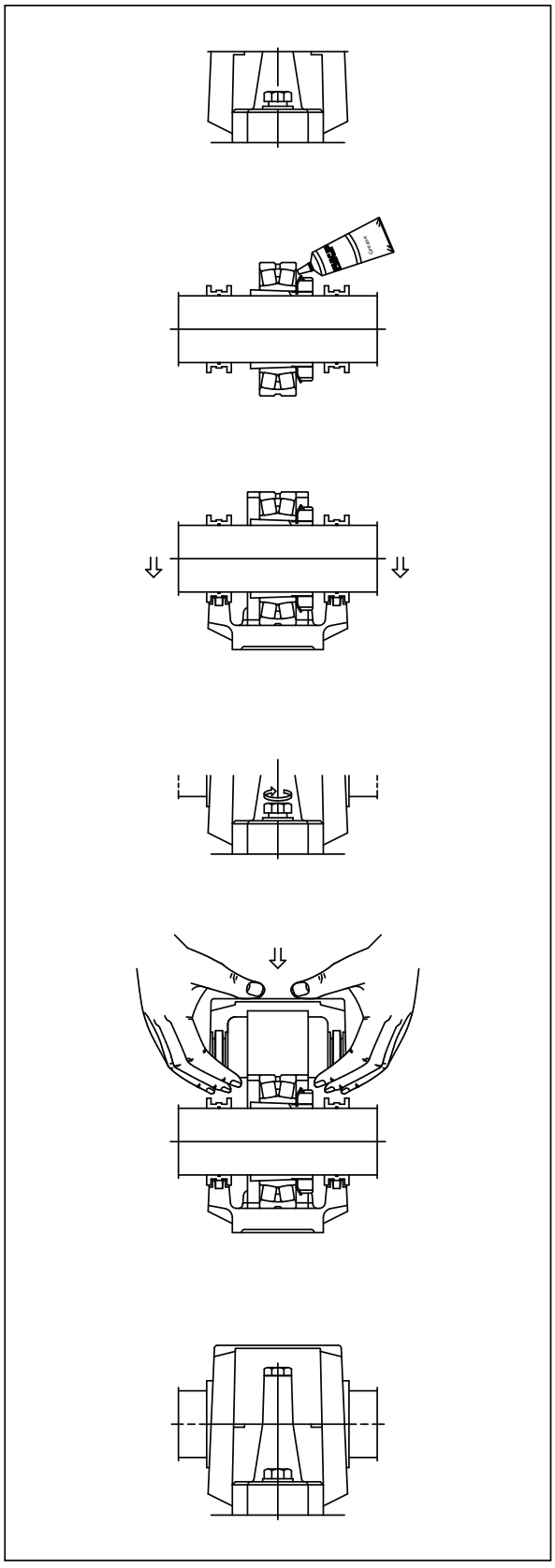

Mounting procedures for pillow block assemblies

Seal Assembly and Mounting Procedure
Labyrinth Seals
Type "TER-C"

1. The housing base is placed in position and the mounting bolts loosely fitted.

2. Slide one labyrinth flinger, with the prongs pointed toward the bearing location onto the shaft. Then slide the labyrinth insert, with the O-ring installed on its O.D., on the shaft.

3. The bearing is mounted on the shaft (directly or on an adapter) and filled with grease.

4. The second labyrinth seal is placed on the shaft following the instructions as described above under step 2 except in reverse sequence.

5. The shaft, complete with the bearing assembly and the labyrinth seal assemblies, is placed in the lower half of the housing.

6. For a held unit, the fixing rings are placed in position. For a free unit, the bearing must be located in the center of the bearing seat of the housing for proper lubrication.

7. The housing base is checked for alignment, ensuring that it is within acceptable limits, and the mounting bolts are then slightly tightened.

8. At the first charge of grease, the bearing MUST be filled with grease. (Do not wash out the protective coating.) The housing should be filled one-third to one-half full depending on the speed. For grease quantities, refer to page 36.

9. The housing cap is fitted to the base, being careful not to damage the O-rings on the O.D. of the seal rings, and the cap bolts are tightened to the recommended torque. (See tables on page 39.) NOTE: Caps and bases are not interchangeable. Serial numbers on the caps and bases of most SAF housings help to assure proper matching.

10. The mounting bolts are tightened to the support.

11. Fill the seal labyrinth on the insert and the flinger with grease.

12. To adjust the labyrinth seal flingers, move the flingers axially toward the housing till they contact the insert. Back the flinger off 1/16" (1.6 mm) on the "HELD" assembly. For a "FREE" assembly, back off the amount of the expected shaft expansion plus 1/32" (0.8 mm). Tighten the set screws.

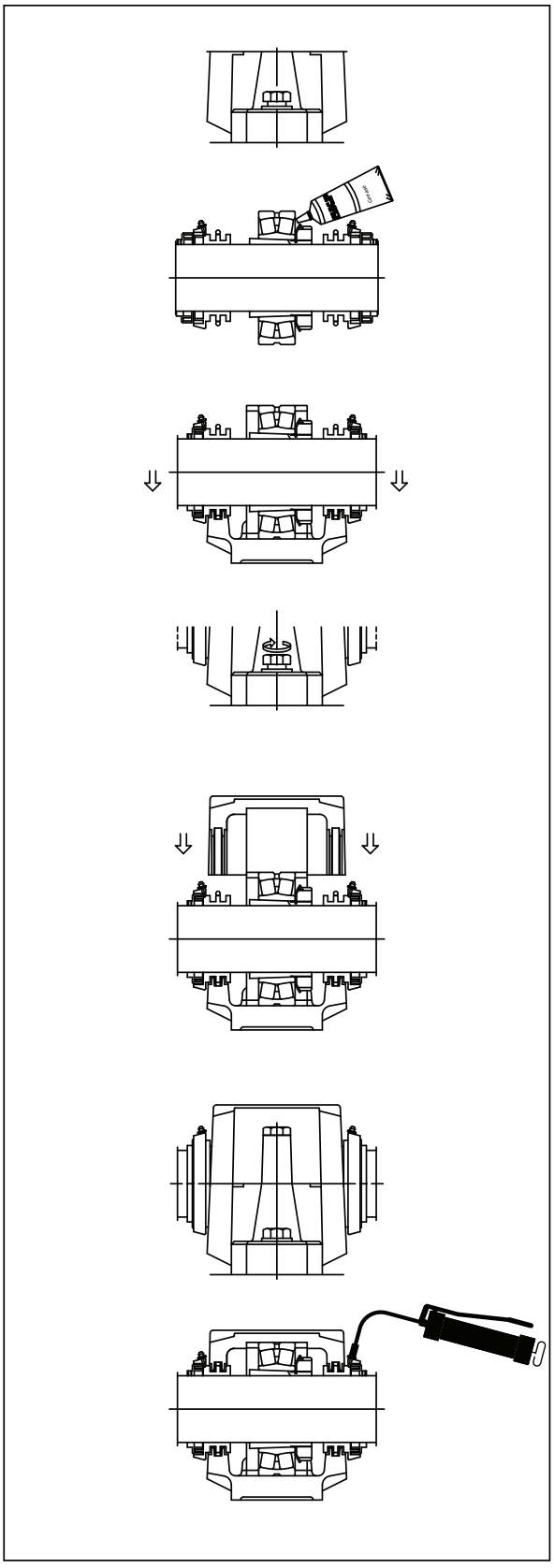

Seal Assembly and Mounting Procedure
Labyrinth Seals Type TER-CV for SAF/SAFD and TNF for SNL

1. The housing base is placed in position and the mounting bolts loosely fitted.

2. Slide one labyrinth flinger and V-ring on the shaft. Point the prongs of the flinger and the V-ring lip toward the bearing location. Then slide the labyrinth insert with the O-ring installed on its O.D. onto the shaft.

3. The bearing is mounted on the shaft (directly or on an adapter sleeve) and filled with grease.

4. The second labyrinth seal is placed on the shaft following the instructions as described above under step 2, except in reverse sequence.

5. The shaft, complete with the bearing assembly and the labyrinth seal assembly, is placed in the lower half of the housing.

6. For a held unit, the fixing rings are placed in position. For a free unit, the bearing must be located in the centre of the bearing seat of the housing for proper lubrication.

7. The housing base is checked for alignment, ensuring that it is within acceptable limits, and the mounting bolts are then slightly tightened.

8. At the first charge of grease, the bearing MUST be filled. (Do not wash out the protective coating.) The housing should be filled one-third to one-half full, depending on the speed. For grease quantities refer to page 36.

9. The housing cap is fitted to the base, being careful not to damage the O-rings on the O.D. of the seal inserts and the cap bolts are tightened to the recommended torque. (See tables on page 39.) NOTE: Caps and bases are not interchangeable. Serial numbers on the caps and bases of most SAF and all SNL housings help to assure proper matching.

10. The mounting bolts are tightened to the support.

11. Fill the seal labyrinth on the insert and the flinger with grease.

12. To adjust the labyrinth seal flingers, move the flingers axially toward the housing until they contact the insert. Back the flinger off 1/16" (1.65mm) on a “HELD” assembly. For a "FREE" assembly back off the amount of the expected shaft expansion plus 1/32”. Tighten the set screws.

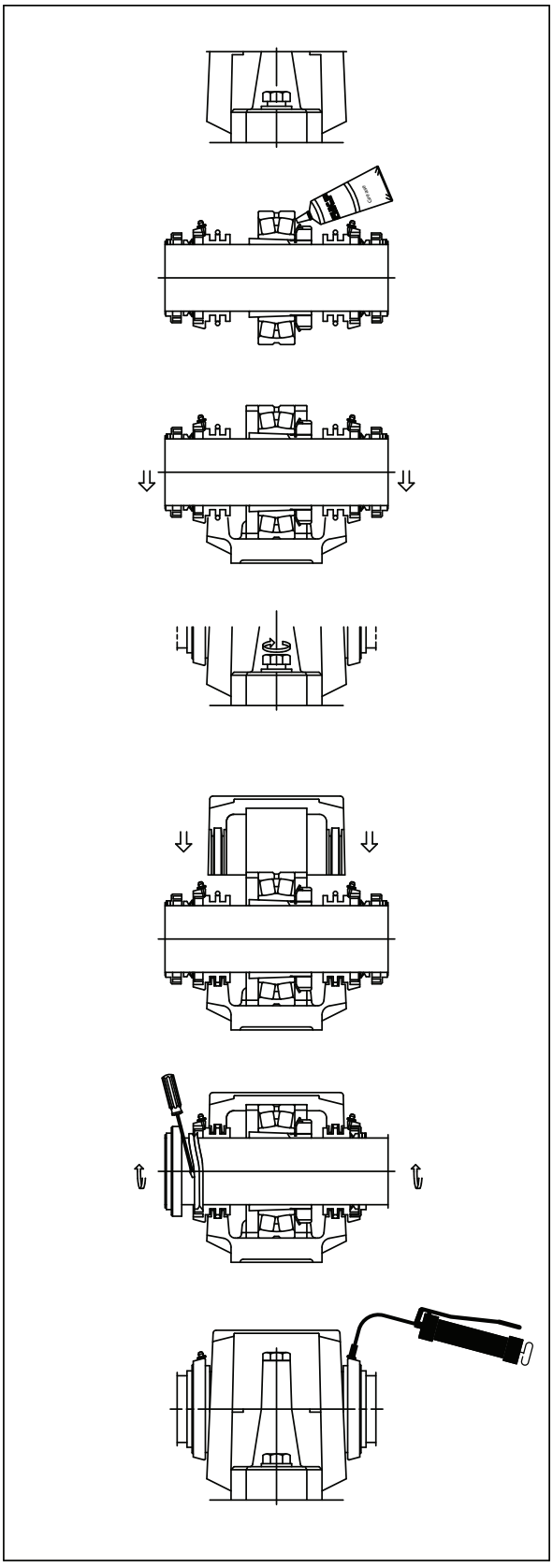

Mounting procedures for pillow block assemblies

Seal Assembly and Mounting Procedure
Labyrinth Seals TSNC, TSDC "D" Type

1. The housing base is placed in position and the mounting bolts loosely fitted.

2. Slide one labyrinth flinger and V-ring onto the shaft. Point the prongs of the flinger and the V-ring lip toward the bearing location. Then slide the labyrinth insert with the O-ring installed on its O.D. onto the shaft.

3. The bearing is mounted on the shaft (directly or on an adapter sleeve) and filled with grease.

4. The second labyrinth seal is placed on the shaft following the instructions as described above under step 2, except in reverse sequence.

5. The shaft, complete with the bearing assembly and the labyrinth seal assemblies, is placed in the lower half of the housing.

6. For a held unit, the fixing rings are placed in position. For a free unit, the bearing must be located in the center of the bearing seat of the housing for proper lubrication.

7. The housing base is checked for alignment, ensuring that is within acceptable limits, and the mounting bolts are then slightly tightened.

8. At the first charge of grease, the bearing MUST be filled (do not wash out the protective coating) and the housing should be filled one-third to one-half full depending on the speed. For grease quantities refer to page 36.

9. The housing cap is fitted to the base, being careful not to damage the O-rings on the O.D. of the seal inserts, and the cap bolts are tightened to the recommended torque. (See tables on page 39.) NOTE: Caps and bases are not interchangeable. Serial numbers on the caps and bases of all SNL housings help to assure proper matching. SAFD and SDCD are not serialized.

10. The mounting bolts are tightened to the support.

11. To adjust the labyrinth seal flingers, move the flingers axially toward the housing till they contact the insert. Back the flinger off 1/16" on a "HELD" assembly. For a "FREE" assembly back off the amount of the expected shaft expansion plus 1/32". Tighten the set screws which secure the flingers on the shaft. To complete the assembly in the case of SDCD housings with these labyrinth seal assemblies, take one half of the 4 mm rubber cord supplied and insert it into the counter bore of each flinger bore adjacent to the outer face.

12. At the initial start up, with the shaft rotating, lubricate the seals through the grease fitting until a bead of grease appears around the periphery of the flingers. NOTE: Use the same grease as for the lubrication of the bearing.

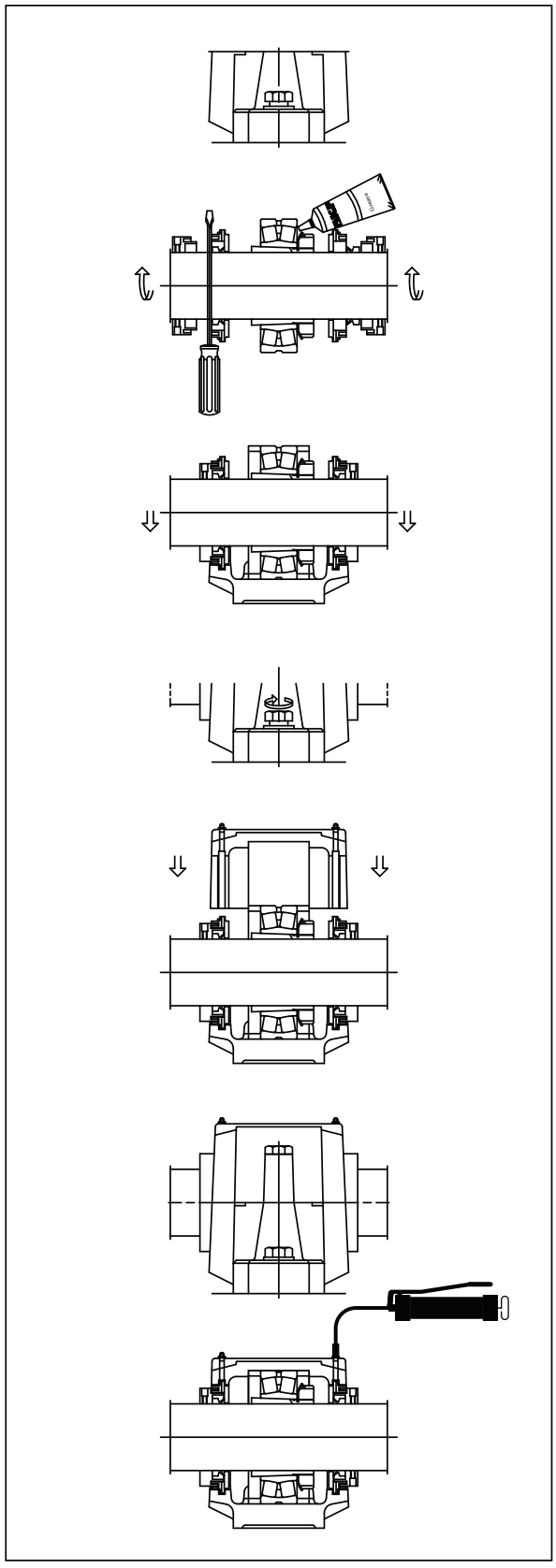

Seal Assembly and Mounting Procedure
Labyrinth Seals TSNC, TSDC "E" Type

1. The housing base is placed in position and the mounting bolts loosely fitted.

2. Slide one labyrinth flinger onto the shaft, with the prongs pointed toward the bearing location. Then slide the labyrinth insert onto the shaft, with the O-ring installed on its O.D.

3. The bearing is mounted on the shaft (directly or on an adapter) and filled with grease.

4. The second labyrinth seal is placed on the shaft following the instructions as described above under step 2, except in reverse sequence.

5. The shaft, complete with the bearing assembly and the labyrinth seal assemblies, is placed in the lower half of the housing.

6. For a held unit, the fixing rings are placed in position. For a free unit, the bearing must be located in the center of the bearing seat of the housing for proper lubrication.

7. The housing base is checked for alignment, ensuring that it is within acceptable limits, and the mounting bolts are then slightly tightened.

8. At the first charge of grease, the bearing MUST be filled with grease. (Do not wash out the protective coating.) The housing should be filled one-third to one-half full, depending on the speed. For quantities refer to page 36.

9. The housing cap is fitted to the base and the cap bolts tightened to the recommended torque value. (See tables on page 39.) NOTE: Caps and bases are not interchangeable. Serial numbers on the caps and bases of all SNL housings help to assure proper matching. SAFD and SDCD are not serialized.

10. The mounting bolts are tightened to the support.

11. To adjust the labyrinth seal flingers, move the flinger axially toward the housing until they contact the insert. Back the flinger off 1/16" on "HELD" assemblies. For "FREE" assemblies, back off the amount of the expected shaft expansion plus 1/32". Tighten the set screws which secure the flingers to the shaft. A final step with TSCD seals requires the 4 mm rubber cord supplied to be inserted into the counterbore of each flinger.

12. At the initial startup, with shaft rotating, lubricate the seals through the grease fitting until a bead of grease appears around the periphery of the flingers. NOTE: Use the same grease as for the lubrication of the bearing.

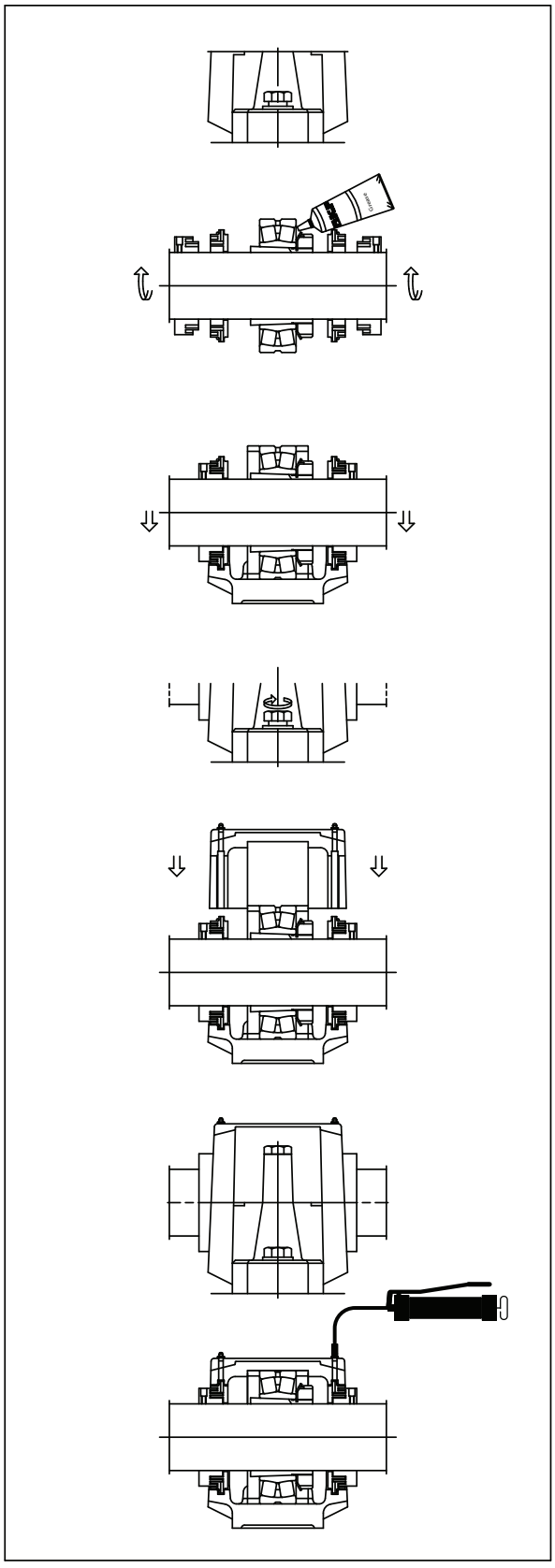

Lubrication

General

It is necessary to lubricate rolling bearings to prevent metallic contact between the rolling elements, the raceways and the cage. The most favourable running (operating) condition for a rolling bearing is obtained when the minimum quantity of lubricant necessary to ensure reliable operation is used. However, the quantity used also depends on additional functions required of the lubricant, i.e. sealing and cooling.

Lubricating properties deteriorate as a result of aging and mechanical churning. When using labyrinth and taconite seals in severely contaminated environments, it is suggested to shorten the relubrication interval. Certain operating conditions, i.e. high speeds, high temperatures or heavy loads, require more frequent relubrication.

The choice of lubricant depends primarily on the temperature range, operating speed and magnitude of the load. Either oil or grease of proper quality can be considered for lubricating bearings. At low and medium speeds, grease usually permits a simpler method of obtaining reliable and durable lubrication. It requires a simpler sealing system and has an additional advantage of affording excellent protection to bearings against rust and intrusion of contaminants. With high speeds, it becomes necessary to add fresh grease and remove old grease more frequently to obtain safe operation. When this becomes impractical, due to speed and temperature, oil should be used instead of grease.

When oil is used, it is advisable to employ an oil reservoir or an adequate supply of oil and effective housing seals to avoid leakage. The level of oil should be about the centre of the lowest ball or roller when the bearing is stationary.

Too high an oil level or too large a quantity of grease usually results in higher operating temperatures due to churning of the lubricant.

Grease Lubrication

SKF pillow block housings are primarily intended for grease lubrication. In the majority of cases it is sufficient to charge the housings with grease on mounting and to replace this grease periodically, either at specified time intervals or when performing inspections.

Pillow block housing caps can be equipped with grease fittings. For spherical roller bearings with W33 or E suffix (groove in outer ring and three lubricating holes spaced at 120°) the center lubricating fitting should be used. For bearings without the W33 or E feature, either of the two side lubrication fittings can be used to supply grease. Generally the fitting on the side opposite the locknut is used, unless one end is closed.

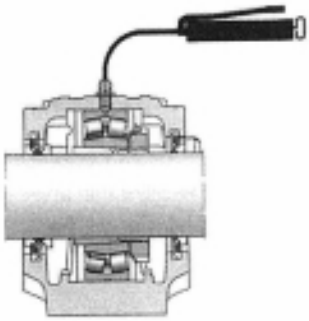

Lubrication through center fitting for W33

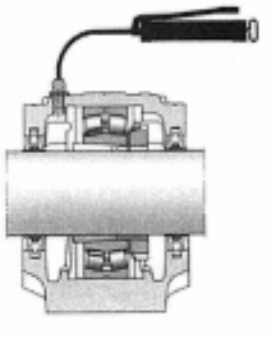

Lubrication through the side fitting for bearings without W33

At installation, the grease must be worked in between the rolling elements. The housing should be packed one-third to one-half full. Never mix greases with unlike base oils or incompatible thickeners. It should also be noted that bearings are generally lubricated after mounting. This ensures an accurate clearance measurement, avoids the mess in trying to handle a greasy bearing, and decreases the possibility of additional contamination being introduced into the bearing. Only when, after mounting, an even distribution of the grease in the bearing is not possible should one consider greasing prior to mounting.

Procedure for applying lubricant to bearings and pillow blocks:

a) Mount the bearing onto the shaft.

b) Pack each bearing as completely full of the specified grease as possible by swiveling the outer ring open, rotating it as necessary to inject the grease, then swiveling the outer ring closed. Be careful not to use force in the event that a roller end catches the corner of the outer sphere.

c) When assembling the flinger (where applicable), pack both the inboard and outboard flingers full of the same lubricant used in the bearing.

d) Before assembling the pillow block cap to the base, and after completing the bearing and base assembly, fill the pillow block one-third to one-half full, depending on the speed, with the same lubricant that was used to pack the bearing.

e) Before applying the cap to the base, spray or otherwise coat the interior of the cap with a rust preventative.

f) Smear a liberal amount of grease on the V-ring (where applicable), contacting surfaces of the seal, hub on the shaft, plate and hub.

If long term storage and/or shipping considerations have to be taken into account, then, dependent on the circumstances, additional lubrication precautions have to be considered.

Lubrication procedure to be used after start-up

Many applications require relubrication between inspections. As a result, drilled and tapped holes are included in the centre of the block for W33 or E type bearings and offset holes for self-aligning and CARB® bearings. There are also dimples over the hubs to accommodate holes for lubricating the seals. Grease nipples are included in SNL blocks.

When housings need such grease fittings and the bearings are not lubricated via the W33 feature in the center of the bearing, then an extra V-Ring seal is supplied. This extra seal is mounted inside of the grease input side of the pillow block. The grease will then be forced through the bearing and any surplus grease will escape from the side of the housing opposite this extra V-Ring seal.

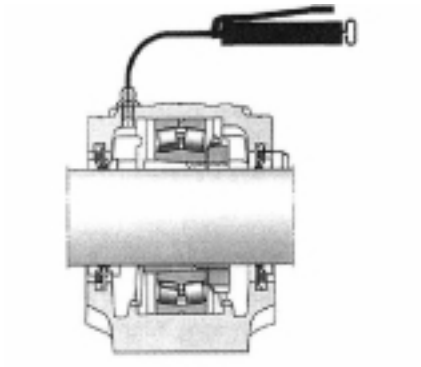

Except for the V-Ring seal set described above, very few seal designs will allow for an excess grease charge to escape from the housing and therefore present possible overheating conditions. If bearing temperatures are monitored, it will be noted that the temperature will rise immediately after a grease charge enters a bearing. Under normal conditions such increased heating will last only as long as it takes a bearing to clear the excess grease away.

In applications where the operating conditions demand frequent relubrication, it is important to ensure that an excess of grease does not build up within the housing. This can lead to bearing failure through churning of the grease, subsequent overheating and eventual bearing burnout.

G and C design seals are examples, which do not allow grease to purge through the seals. If frequent relubrication is required, it is advisable to provide the housing with a grease escape hole through which excess grease can escape. SNL housings can be supplied with grease purge holes in the base. This housing design is identified by the suffix VU, e.g. SNL 511-609 VU. Consult SKF for details.

Housing with grease escape hole

LER/LOR seals in SAF/SAFD units won't allow for grease purging. Pressure may be relieved if the drain plug is removed while regreasing and with the bearing running. When bearing temperatures return to normal, the drain plug is replaced.

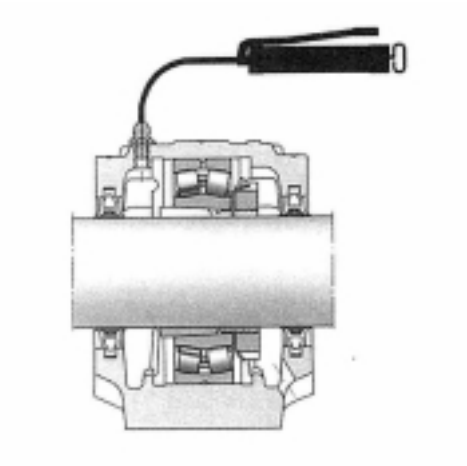

Oil is generally used for rolling bearing lubrication when high speeds or operating temperatures are beyond the capabilities of the lubricating grease. In these cases the frictional (internal) or applied (external) heat has to be removed from the bearing.

The simplest method of oil lubrication is the "Oil Bath". The lubricating oil, which is picked up by the rotating components of the bearing, is distributed within the bearing and then flows back to the oil sump. The oil level should be such that it reaches the center of the lowest rolling element when the bearing is stationary. The oil level height is shown in this catalogue as dimension H3. The mounting of an oil sight gauge on the side of the pillow block is useful to ensure an adequate oil level is maintained.

Operating at higher speeds will cause the bearing operating temperature to increase and will accelerate aging of the oil. To remove the heat, oil circulating systems or cooling coils in the oil sump are available (consult SKF). Cooling of the oil enables the operating temperature of the bearing to be kept at a lower level.

Pillow blocks with triple ring seals (LER, LOR, LORP, S, TS) and V-ring seals are also suitable for oil lubrication providing certain criteria are observed. The SNL housings can also be used for oil lubrication at relatively high speeds, however, the specially developed UL-design seals are recommended. In order for these seals to be used the SNL housing must be modified and the housing with seals ordered as a unit. Consult SKF for details.

Pillow blocks of series SAF, SAFD and SDCD designs are equipped with oil sumps that permit oil bath or circulating oil lubrication. The oil supply hole in the pillow block cap must be positioned opposite to the exit hole in the base of the pillow block to ensure that the oil passes through the bearing. Holes for oil indicators (sight glass) can be drilled in the bases.

NOTE: If for any reason an application is considered to be different from standard, or on the borderline between grease and oil, please contact SKF.

Oil Lubrication may be applied in several ways:

A. Oil Bath
B. Circulating Oil (Dry Sump)
C. Circulation Oil (Wet Sump)

Operating conditions will dictate which method of oil lubrication is best suited to a bearing application. Consult SKF if necessary.

"A" The Oil Bath methods of lubrication are easy to apply and will cover most applications. The mounting of an oil sight gauge in the side of the pillow block housing makes for easy maintenance.

"B" Circulation Oil (Dry Sump) will be used in cases when it is necessary to use the oil as a means of cooling the bearing. If for practical reasons drainage from the pillow block housing can only be done from one side, the oil sumps must be balanced. Similarly, if the oil is introduced into the pillow block housing equipped with self-aligning ball bearings, CARB® and spherical roller bearings without the W33 feature, the oil inlet hole is located opposite to the oil outlet hole. For these bearing series the sumps must not be balanced.

"C" Circulating Oil (Wet Sump) In this scenario, the oil outlet hole is set at a height that will ensure a sufficient quantity of oil in the housing, as with the oil bath system. The wet sump assures that the bearing is protected while rotating in the event of a failure with the circulating system. The oil sumps must be balanced.

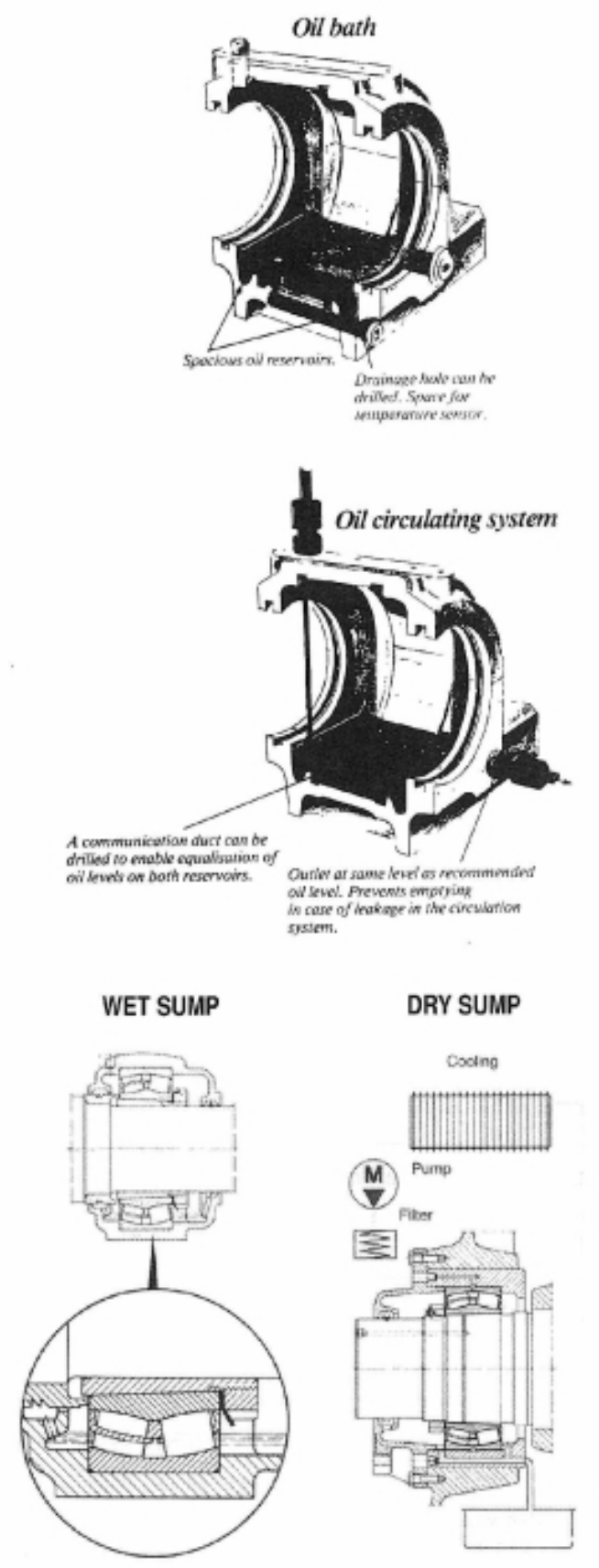

Relubrication and Relubrication Intervals

Relubrication Intervals

The period during which a grease lubricated bearing will function satisfactorily without relubrication is dependant on the bearing type, size, and operating conditions such as load, speed, temperature, environment and grease used.

Contaminated grease results in failures such as premature fatigue, polishing wear, etc. Where there is a risk of the grease becoming contaminated, the relubrication intervals should be reduced. This reduction also applies to applications where the grease is required to seal against moisture (e.g. bearings in paper making machines, where water runs over the bearing housings); relubrication should be done once a week.

Quality age resistant greases are usually good for temperatures up to +70ºC. At temperatures above 70ºC, the lubrication intervals should be halved for each increment of 15ºC but the maximum permissible operating temperature for the grease should not be exceeded. Conversely, if operating temperatures are lower than 50ºC, the intervals can be lengthened to about twice the 70ºC value. It should be noted however, that relubrication intervals might vary significantly even where apparently similar grease are used.

SKF offers the Dial Set software package, which calculates the appropriate relubrication intervals and volume required. It can be requested from your local SKF office or found online at www.mapro.skf.com.

The amount of grease needed for relubrication can be estimated using the follow formulae:

G = 0.002 D B if lubrication is through the central W33 groove and holes.
G = 0.005 D B if lubrication is from the side as with self-aligning and CARB® bearings.

Where:

G = the grease quantity in grams (for ozs. X 0.0353)
D = the bearing outside diameter in mm
B = the total bearing width in mm

If the relubrication interval is not specified we suggest that lubricant is removed and replaced at regular plant maintenance shutdowns. The cap of a split housing and the cover of a one-piece housing can usually be taken off to expose the bearing. After removing the used grease, fresh grease should be packed between the rolling elements.

If frequent relubrication is required, a grease nipple should be fitted to the housing. A grease gun can then be used to ensure that fresh grease actually reaches the bearing and replaces the old grease. After a number of such re-lubrications, the housing should be opened and the used grease removed before fresh grease is added.

Notes

Initial Grease Charges for Split Pillow Blocks

The approximate intial grease charge (mass) for split pillow blocks is given in these tables. The recommended intial grease charge is one-third to one-half the volume of the free space in the pillow block, (40% fill shown) and the empty space between rolling elements and cage of the bearing. This recommendation is for moderate speeds and normal or light bearing loads (C/P>8.3).

	Size	Grease qty. g.	oz.
SNL, SSNLD	505, 205	25	0,9
	506-605, 206	40	1,4
	507-606, 207	50	1,8
	508-607, 208	60	2,1
	509	65	2,3
	510-608, 210	75	2,6
	511-609, 211	100	3,5
	512-610, 212	150	5,3
	513-611, 213	180	6,4
	515-612, 215	230	8,1
	516-613, 216	280	9,9
	517, 217	330	11,6
	518-605, 218	430	15,2
	519-616	480	16,9
	520-617	630	22,2
	522-619	850	30,0
	524-620	1000	35,3
	526	1100	38,8
	528	1400	49,4
	530	1700	60,0
	532	2000	70,6

	Size	Grease qty. g.	oz.
SAF, SAFS, SAFD	507	70	2,5
	509	85	3,0
	510	113	4,0
	511	142	5,0
	513	213	7,5
	515	255	9,0
	516, 216	369	13,0
	517, 217	369	13,0
	518, 218	397	14,0
	520, 220	595	21,0
	522, 222	794	28,0
	524, 224	1134	40,0
	526, 226	1475	52,1
	528, 228	1475	52,1
	530, 230	1700	60,0
	532, 232	1930	68,1
	534, 234	2381	84,0
	536, 236	2722	96,1
	538, 238	3290	116,1
	540, 240	3860	136,3
	544, 244	5200	183,6

	Size	Grease qty. g.	oz.
SAF	308	127	4,5
	609, 309	142	5,0
	610, 310	184	6,5
	611, 311	227	8,0
	312	283	10,0
	613, 313	369	13,0
	314	397	14,0
	615, 315	397	14,0
	616, 316	453	16,0
	617, 317	567	20,0
	618, 318	624	22,0
	620, 320	1134	40,0
	622, 322	1475	52,1
	624, 324	1700	60,0
	626, 326	1930	68,1
	628, 328	2381	84,0
	630, 330	2722	96,1
	632, 332	3290	116,1
	634, 334	3860	136,3
	638, 338	5200	183,6

	Size	Grease qty. kg	lb
SNL 31, SDCD 31	34	1,1	2,4
	36	1,4	3,1
	38	1,8	4,0
	40	2,3	5,1
	44	2,7	6,0
	48	3,4	7,5
	52	4,3	9,5
	56	4,4	9,7
	60	6,2	13,7
	64	7,7	17,0
	68	9,4	20,7
	72	9,7	21,4
	76	9,6	21,2
	80	12,2	26,9
	84	14,9	32,8
	88	16,2	35,7
	92	18,8	41,4
	96	18,5	40,8

		g.	oz.
SDAF	520	571	20,2
	522	771	27,2
	524	914	32,3
	526	1257	44,4
	530	1371	48,4
	532	1714	60,5
	534	2171	76,6
	536	2514	88,7
	538	2971	104,9
	540	3657	129,1
	544	4800	169,4

		g.	oz.
SAF-K	024 KA	595	21,0
	026 KA	794	28,0
	028 KA	1134	40,0
	030 KA	1475	52,1
	032 KA	1475	52,1
	034 KA	1475	52,1
	036 KA	1930	68,1
	038 KA	1930	68,1
	040 KA	2381	84,0
	044 KA	3290	116,1
	048 KA	3860	136,3
	052 KA	5200	183,6
	056 KA	7000	247,1

		kg	lb
SNL 30, SDCD 30	36	1,2	2,6
	38	1,5	3,3
	40	1,9	4,2
	44	2,4	5,3
	48	2,8	6,2
	52	3,6	7,9
	56	4,5	9,9
	60	4,6	10,1
	64	6,5	14,3
	68	8,1	17,9
	72	8,1	17,9
	76	11,0	24,3
	80	11,7	25,8
	84	11,8	26,0
	88	14,4	31,7

		kg	lb
SNL 32, SDCD 32	34	1,86	4,1
	36	1,89	4,2
	38	2,15	4,7
	40	2,48	5,5
	44	3,03	6,7
	48	3,80	8,4
	52	5,63	12,4
	56	5,64	12,4
	60	6,93	15,3
	64	8,61	19,0
	68	8,35	18,4
	72	10,69	23,6
	76	12,29	27,1
	80	14,62	32,2
	84	15,25	33,6
	88	15,07	33,2

* If grease-filled seals are used i.e. TER, TSNC, TNF or ND, grease quantities listed do not include the grease charge of the seals.

Lubrication Fittings for Housings with Tapped Holes in the Housing Cap

Housing series	Housing size	Lubrication fittings
SNL	All	Tapped hole in housing cap 1/8 - 27 NPSF all SNL grease fittings AH 1/8 - 27 PTF for replacement use Alemite 1610-BL
SSNLD	All	Tapped hole in housing cap 1/8 NPT grease fittings Alemite 1610-BL
SAFD and SAFS	507 to 518 and 216 to 218 520 to 544 and 220 to 244	Tapped hole in housing cap 1/8 NPT grease fittings Alemite 1610-BL Tapped hole in housing cap 1/4 NPT grease fittings Alemite 1627-B
SAF	507 to 518, 608 to 616, 216 to 218, 308 to 316 520 to 544, 617 to 638, 220 to 244, 317 to 338	Tapped hole in housing cap 1/8 NPT grease fittings Alemite 1610-BL Tapped hole in housing cap 1/4 NPT grease fittings Alemite 1627-B
SAF-K	All	Tapped hole in housing cap 1/4 NPT grease fittings Alemite 1627-B
SDCD 30, 31 and 32	All	Tapped hole in housing cap 1/4 NPT grease fittings Alemite 1627-B
SNL 30, 31 and 32	All	Tapped hole in the housing cap for a 1/8-27 PTF grease fittings for replacment use Alemite 1610BL

Shaft Tolerances for Adapter Mounting

Imperial

Nominal Shaft diameter (in.)		Diameter tolerances (in.)		Max. permissible taper and ovality on radius (in.)
over	incl.	max	min	
0.394	0.709	+0.000	-0.0017	0.00015
0.709	1,181	+0.000	-0.0020	0.0002
1,181	1,969	+0.000	-0.0024	0.0002
1,969	3.150	+0.000	-0.0029	0.00025
3.150	4,724	+0.000	-0.0034	0.0003
4,724	7,087	+0.000	-0.0039	0.00035
7,087	9,843	+0.000	-0.0045	0.0004
9,843	12,402	+0.000	-0.0051	0.00045
12,402	15,748	+0.000	-0.0055	0.0005
15,748	19,685	+0.000	-0.0061	0.00055

Metric

Nominal Shaft diameter		Diameter tolerances		Max. permissible taper and ovality on radius
over	incl.	max	min	
diameter (mm)		tolerances (µm) 0.001 mm		
10	18	+0	-43	4,0
18	30	+0	-52	4,5
30	50	+0	-62	5,5
50	80	+0	-74	6,5
80	120	+0	-87	7,5
120	180	+0	-100	9,0
180	250	+0	-115	10,0
250	315	+0	-130	11,5
315	400	+0	-140	12,5
400	500	+0	-155	13,5

Note:
Recommended shaft finish for direct mounting on a shaft is 63 rms/Ra32(µm).
Recommended shaft finish for use under a sleeve is 125 rms.
Tables are recommended for use in applications where loads and speeds are normal.
Where unusual conditions such as high thrust, shock loads, extreme temperatures and speeds prevail, consult SKF.

Cap Bolt Tightening Torque Values

Proper assembly of pillow block housings requires that adequate torque be applied to the housing cap and base bolts during installation. This produces a preload to avoid elastic separation of the mating parts under load and to resist gradual loosening over time. For assemblies that will be subject to cyclic loading and dynamic imbalance, following these torque values is of increased importance.

The torque values below are based on the bolt material; yield strength and material interface between the bolt and housing. These values are for unlubricated threads. For situations where lubrication is used, additional factors must be considered.

SAF, SAFD and SDCD				
Bolt Grade	**Cap Bolt Size**	**Yield Strength**	**Torque (Nm)**	
			75%	**90%**
SAE Grade 8	7/16 - 14	-	66	79
	1/2 - 13	(MPa)	103	124
SAF 024-052K	5/8 - 11	634	206	248
SAF 300 series	3/4 - 10		369	443
SAF 530 - 544	7/8 - 9		599	718
SAF 600 series	1 - 8	PSI	898	1077
	1 1/4 - 7	91, 900	1809	2171
	1 1/2 - 6		3155	3787
	1 3/4 - 5		4969	5963

SAF				
Bolt Grade	**Cap Bolt Size**	**Yield Strength**	**Torque (Nm)**	
			75%	**90%**
	7/16 - 14	(MPa)	63	75
ISO Grade 8.8	1/2 - 13	640	97	117
(SAF 213 to 228, SAF 507 to 528)	5/8 - 11		195	234
	3/4 - 10	PSI	348	418
	7/8 - 9	92, 800	565	678
	1 - 8		847	1016
SAE Grade 2 (SAF 056)	1 1/2 - 6	(MPa) 248 PSI 35, 950	1153	1384
ASTM 449 (all other)	1/2 - 13	(MPa)	97	116
	5/8 - 11	634	193	232
	3/4 - 10		345	415
	7/8 - 9	PSI	560	672
	1 - 8	91,900	840	1008

SNL / FSNLD				
Bolt Grade	**Cap Bolt Size**	**Yield Strength**	**Torque (Nm)**	
			75%	**90%**
ISO Grade 8.8	M10 x 1.5	(MPa)	49	58
	M12 x 1.75	660	85	102
	M16 x 2		213	255
	M20 x 2.5	PSI	427	513
	M24 x 3	95, 700	731	878

Radial Internal Clearance of Spherical Roller Bearings

Spherical roller bearings are manufactured with a variety of radial internal clearances. The most common radial internal clearance is normal without a suffix marked on the bearing. For applications which require different internal clearances SKF can supply bearings with smaller (C2) or greater (C3, C4 and C5) clearances. Values listed in these tables are measured at normal ambient temperatures and zero measuring load before mounting.

For Cylindrical Bore

Bore Diameter		Radial Internal Clearance (µm)									
d (mm)		C2		Normal		C3		C4		C5	
from	incl.	min	max	min	max	min	max	min	max	min	max
18	24	10	20	20	35	35	45	45	60	60	75
25	30	15	25	25	40	40	55	55	75	75	95
31	40	15	30	30	45	45	60	60	80	80	100
41	50	20	35	35	55	55	75	75	100	100	125
51	65	20	40	40	65	65	90	90	120	120	150
66	80	30	50	50	80	80	110	110	145	145	180
81	100	35	60	60	100	100	135	135	180	180	225
101	120	40	75	75	120	120	160	160	210	210	260
121	140	50	95	95	145	145	190	190	240	240	300
141	160	60	110	110	170	170	220	220	280	280	350
161	180	65	120	120	180	180	240	240	310	310	390
181	200	70	130	130	200	200	260	260	340	340	430
201	225	80	140	140	220	220	290	290	380	380	470
226	250	90	150	150	240	240	320	320	420	420	520
215	280	100	170	170	260	260	350	350	460	460	570
281	315	110	190	190	280	280	370	370	500	500	630
316	355	120	200	200	310	310	410	410	550	550	690
356	400	130	220	220	340	340	450	450	600	600	750
401	450	140	240	240	370	370	500	500	660	660	820
451	500	140	260	260	410	410	550	550	720	720	900
501	560	150	280	280	440	440	600	600	780	780	1000
561	630	170	310	310	480	480	650	650	850	850	1100
631	710	190	350	350	530	530	700	700	920	920	1190
711	800	210	390	390	580	580	770	770	1010	1010	1300
801	900	230	430	430	650	650	860	860	1120	1120	1440
901	1000	260	480	480	710	710	930	930	1220	1220	1570
1001	1120	290	530	530	780	780	1020	1020	1330	1330	1720
1121	1250	320	580	580	860	860	1120	1120	1460	1460	1870
1251	1400	350	640	640	950	950	1240	1240	1620	1620	2060
1401	1600	400	720	720	1060	1060	1380	1380	1800	1800	2300
1601	1800	450	810	810	1180	1180	1550	1550	2000	2000	2550

For Tapered Bore

Bore Diameter		Radial Internal Clearance (µm)									
d (mm)		C2		Normal		C3		C4		C5	
from	incl.	min	max	min	max	min	max	min	max	min	max
24	30	20	30	30	40	40	55	55	75	-	-
31	40	25	35	35	50	50	65	65	85	85	105
41	50	30	45	45	60	60	80	80	100	100	130
51	65	40	55	55	75	75	95	95	120	120	160
66	80	50	70	70	95	95	120	120	150	150	200
81	100	55	80	80	110	110	140	140	180	180	230
101	120	65	100	100	135	135	170	170	220	220	280
121	140	80	120	120	160	160	200	200	260	260	330
141	160	90	130	130	180	180	230	230	300	300	380
161	180	100	140	140	200	200	260	260	340	340	430
181	200	110	160	160	220	220	290	290	370	370	470
201	225	120	180	180	250	250	320	320	410	410	520
226	250	140	200	200	270	270	350	350	450	450	570
251	280	150	220	220	300	300	390	390	490	490	620
281	315	170	240	240	330	330	430	430	540	540	680
316	355	190	270	270	360	360	470	470	590	590	740
356	400	210	300	300	400	400	520	520	650	650	820
401	450	230	330	330	440	440	570	570	720	720	910
451	500	260	370	370	490	490	630	630	790	790	1000
501	560	290	410	410	540	540	680	680	870	870	1100
561	630	320	460	460	600	600	760	760	980	980	1230
631	710	350	510	510	670	670	850	850	1090	1090	1360
711	800	390	570	570	750	750	960	960	1220	1220	1500
801	900	440	640	640	840	840	1070	1070	1370	1370	1690
901	1000	490	710	710	930	930	1190	1190	1520	1520	1860
1001	1120	530	770	770	1030	1030	1300	1300	1670	1670	2050
1121	1250	570	830	830	1120	1120	1420	1420	1830	1830	2250
1251	1400	620	910	910	1230	1230	1560	1560	2000	2000	2450
1401	1600	680	1000	1000	1350	1350	1720	1720	2200	2200	2700
1601	1800	750	1110	1110	1500	1500	1920	1920	2400	2400	2950

Mounting of Spherical Roller Bearings with Tapered Bore

Before spherical roller bearings are mounted on tapered journals or adapter sleeves, the radial internal clearance should be measured using a feeler gauge. Stand the bearing on the work bench and rotate the inner ring a few times to allow the rollers to assume their correct position before inserting the blade of the feeler gauge between the uppermost roller and the outer ring raceway. Use a thin blade to start and increase the thickness gradually until the blade can just be inserted. The measured clearance should be the same for both rows of rollers.

Check the reduction in clearance frequently during the drive-up process by measuring between the lowest roller and the outer ring raceway. The table below contains guideline values for the reduction in radial internal clearance and the axial drive-up for spherical roller bearings. Heavy loads, high speeds, or large differences in temperature between inner and outer rings mean that a relatively large residual radial internal clearance is required. In such cases a bearing having an initial radial internal clearance of C3 or C4 is generally used and mounted by using the maximum clearance reduction figures shown in the table.

Metric measurement

Bearing bore diameter (mm)		Reduction in radial internal clearance (mm)		Axial drive-up s[1] (mm) 1:12 taper on diameter		Axial drive-up s[1] (mm) 1:30 taper on diameter		Minimum permissible residual clearance [2] after mounting (mm)		
from	incl.	min	max	min	max	min	max	Normal	C3	C4
24	30	0,015	0.020	0.30	0,35	-	-	0,015	0.020	0,035
31	40	0.020	0,025	0,35	0.40	-	-	0,015	0,025	0.040
41	50	0,025	0.030	0.40	0,45	-	-	0.020	0.030	0.050
51	65	0.030	0.040	0,45	0.60	-	-	0,025	0,035	0,055
66	80	0.040	0.050	0.60	0,75	-	-	0,025	0.040	0.070
81	100	0,045	0.060	0.70	0.90	1,75	2,25	0,035	0.050	0.080
101	120	0.050	0.070	0,75	1,10	1.90	2,75	0.050	0,065	0.100
121	140	0,065	0.090	1.10	1,40	2,75	3.50	0,055	0.080	0.110
141	160	0,075	0.100	1,20	1,60	3.00	4.00	0,055	0.090	0.130
161	180	0.080	0.110	1,30	1,70	3,25	4,25	0.060	0.100	0.150
181	200	0.090	0.130	1,40	2.00	3.50	5.00	0.070	0.100	0.160
201	225	0.100	0.140	1,60	2,20	4.00	5.50	0.080	0.120	0.180
226	250	0.110	0.150	1,70	2,40	4,25	6.00	0.090	0.130	0.200
251	280	0.120	0.170	1,90	2,70	4,75	6,75	0.100	0.140	0.220
281	315	0.130	0.190	2.00	3.00	5.00	7.50	0.110	0.150	0.240
316	355	0.150	0.210	2,40	3,30	6.00	8,25	0.120	0.170	0.260
356	400	0.170	0.230	2,60	3,60	6.50	9.00	0.130	0.190	0.290
401	450	0.200	0.260	3,10	4.00	7,75	10,0	0.130	0.200	0.310
451	500	0.210	0.280	3,30	4,40	8,25	11,0	0.160	0.230	0.350
501	560	0.240	0.320	3,70	5.00	9.20	12,5	0.170	0.250	0.360
561	630	0.260	0.350	4.00	5,40	10.0	13,5	0.200	0.290	0.410
631	710	0.300	0.400	4,60	6,20	11,5	15,5	0.210	0.310	0.450
711	800	0.340	0.450	5,30	7.00	13,3	17,5	0.230	0.350	0.510
801	900	0.370	0.500	5,70	7,80	14,3	19,5	0.270	0.390	0.570
901	1000	0.410	0.550	6,30	8,50	15,8	21,0	0.300	0.430	0.640
1001	1120	0.450	0.600	6,80	9.00	17,0	23,0	0.320	0.480	0.700
1121	1250	0.490	0.650	7,40	9,80	18,5	25,0	0.340	0.540	0.770

[1] Solid steel shafts only. Larger axial displacements are necessary for hollow shafts depending on the wall thickness; refer to section "Fits for hollow shafts" on page 172 of the SKF General Catalogue 6000. The "SKF Drive-up Method", available on CD from SKF and on line at www.skf.com/mount, may prove very beneficial for this task.

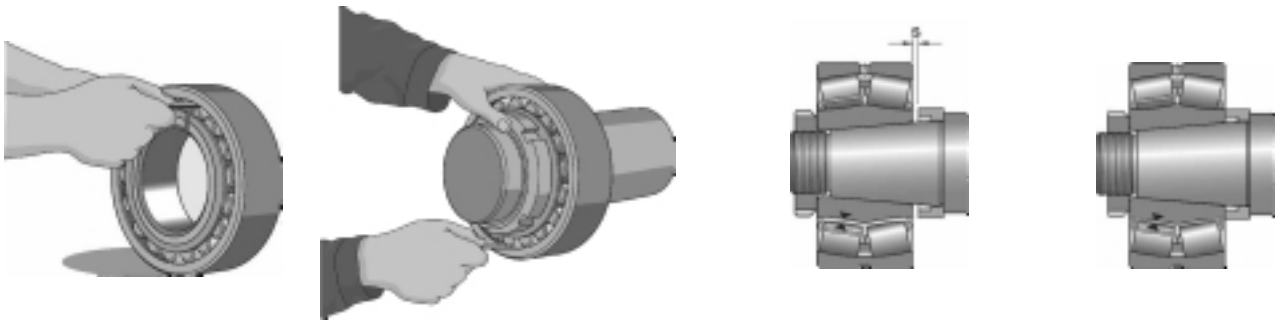

Inch measurement										
Bearing bore diameter		Reduction in radial internal		Axial drive-up s[1] (in)				Minimum permissible residual clearance [2] after mounting		
				1:12 taper		1:30 taper				
(in)		clearance (in)		on diameter		on diameter		(in)		
from	incl.	min	max	min	max	min	max	Normal	C3	C4
24	30	0,0006	0,0008	0,012	0,014	-	-	0,0006	0,0008	0,0014
31	40	0,0008	0.0010	0,014	0,016	-	-	0,0006	0.0010	0,0016
41	50	0.0010	0,0012	0,016	0,018	-	-	0,0008	0,0012	0.0020
51	65	0,0012	0,0016	0,018	0,024	-	-	0.0010	0,0014	0,0022
66	80	0,0016	0.0020	0,024	0.030	-	-	0.0010	0,0016	0.0028
81	100	0,0018	0,0024	0,028	0,035	0.070	0.087	0,0014	0.0020	0.0031
101	120	0.0020	0,0028	0.030	0,043	0,075	0.106	0.0020	0,0026	0.0039
121	140	0,0026	0,0035	0,043	0,055	0.106	0.138	0,0022	0.0031	0,0043
141	160	0.0030	0.0039	0,047	0,063	0.118	0,158	0,0022	0,0035	0.0051
161	180	0.0031	0,0043	0.051	0.070	0.126	0,165	0,0024	0.0039	0.0059
181	200	0,0035	0.0051	0,055	0.079	0.138	0,197	0,0028	0.0039	0,0063
201	225	0.0039	0,0055	0.063	0,087	0,158	0,217	0.0031	0,0047	0.0071
226	250	0,0043	0.0059	0,067	0,095	0,165	0,236	0,0035	0.0051	0.0079
251	280	0,0047	0,0067	0,075	0,106	0,185	0,264	0.0039	0,0055	0,0087
281	315	0.0051	0,0075	0.079	0.118	0,197	0,295	0,0043	0.0059	0,0095
316	355	0.0059	0,0083	0,095	0.130	0,236	0,323	0,0047	0,0067	0.0102
356	400	0,0067	0.0091	0.102	0.142	0,256	0,354	0.0051	0,0075	0,0114
401	450	0.0079	0,0102	0.122	0,158	0,303	0,394	0.0051	0.0079	0.0122
451	500	0,0083	0.0110	0.130	0,173	0,323	0,433	0,0063	0.0091	0,0138
501	560	0,0094	0,0126	0,146	0.197	0.362	0.492	0,0067	0.098	0.0142
561	630	0.0102	0,0138	0,158	0,213	0,394	0.532	0.0079	0,0114	0.0161
631	710	0.0118	0,0157	0.181	0,244	0,453	0.610	0,0083	0.0122	0,0177
711	800	0,0134	0,0177	0.209	0,276	0,524	0.689	0.0091	0,0138	0.0201
801	900	0,0146	0,0197	0,224	0,307	0,563	0.768	0,0106	0.0154	0,0224
901	1000	0.0161	0,0217	0.248	0,335	0.620	0.827	0.0118	0.0169	0.0252
1001	1120	0,0177	0,0236	0.268	0,354	0.669	0.906	0,0126	0,0189	0,0276
1121	1250	0,0193	0,0256	0.291	0,386	0.728	0,984	0,0134	0,0213	0,0303

[2] The residual clearance must be checked in cases where the initial radial internal clearance is in the lower half of the tolerance range and where large temperature differentials between the bearing rings can arise in operation. The residual clearance must not be less than the minimum values quoted..

Split Pillow Block Housing Safe Loads

The selection of a rolling bearing pillow block depends not only on determining adequate service life of the bearing for the operating conditions of the application but also on the adequacy of the housing to safely accommodate the magnitude and characteristics of all applied loads.

Split pillow blocks are designed for predominantly vertical loads directly through the base. If the load direction is not perpendicular to the base, care should be taken to see that the selected housings have sufficient strength and an adequate factor of safety against fracture when properly assembled to carry the loads involved.

Proper assembly techniques dictate that the housing cap and base bolts be torqued to achieve preload during installation to avoid elastic separation of the mating parts under load and to resist gradual loosening over time. To obtain full fatigue resistance of the bolts, care in following the recommended torque requirements is of particular importance when the assembly is subjected to the action of cyclic loading and dynamic imbalance.

The tabulations on the following pages show the approximate safe loads for different directions of load. These guideline limits have been established using accepted engineering practices with consideration given to safety, ultimate tensile strength of the materials used and working stresses to reflect a safety factor of 5 against fracture.

For purely axial force under static or dynamic conditions, the permissible load is approximately 65% of the P180 value shown in the tables. When applied axial loads are of any substantial magnitude, it is preferable to support the base against a shoulder rather than relying solely on the base bolt tightening to prevent slippage between the base and the mounting surface.

The axial load rating for adapter sleeve mounted pillow blocks depends also on the shaft/ adapter sleeve fitting. If spherical roller, CARB or self-aligning ball bearings with adapter sleeves are mounted on smooth shafts with no fixed abutment, the friction between the shaft and adapter sleeve determines the magnitude of the axial load that can be supported. Provided the bearings are correctly mounted, the permissible axial load can be calculated from:

$F_{ap} = 3 B d$

where
F_{ap} = maximum permissible axial load, N
B = bearing width, mm
d = bearing bore diameter, mm

When an application is subjected to dynamic unbalance loading or shock, SKF Engineering should be contacted.

Pillow Block Housing Safe Loads
Series: SNL 200-300, SNL 500-600

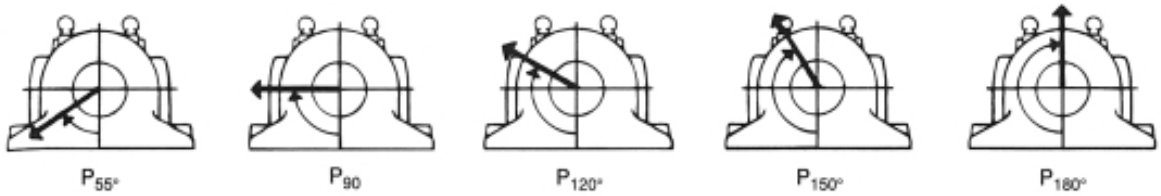

	Recommended Safe Load (N)										
	SNL/FSNL					SSNLD					
Size	P 55°	P 90°	P 120°	P 150°	P 180°	P 55°	P 90°	P 120°	P 150°	P 180°	Cap Bolt
505, 205	25800	15800	11700	10000	13300	-	-	-	-	-	M10
506-605, 206-305	28300	16700	13300	10800	14200	-	-	-	-	-	M10
507-606, 207	31700	19200	14200	13300	15800	-	-	-	-	-	M10
508-607, 208-307	35800	21700	15800	14200	18300	63300	38300	28300	25000	33300	M10
509, 209	38300	23000	16600	15000	19200	68300	41700	30000	26700	35000	M10
510-608, 210	44200	25800	20000	18300	21600	78300	46600	35800	33300	38500	M12
511-609, 211	45800	28300	20800	19200	23300	81700	50000	37500	35000	41700	M12
512-610, 212	50000	30000	21700	20000	25000	90000	53300	38300	35800	45000	M12
513-611, 213	56700	34200	25000	21700	28300	101700	61700	41700	38300	50000	M12
515-612, 215	68300	41700	30800	26700	34200	123300	75000	55000	48300	61700	M12
516-613, 216	71700	43300	31700	29200	35800	128300	78300	56700	51700	65000	M12
517, 217	80000	48300	34200	31700	40000	143300	86700	61700	56700	71700	M12
518-615, 218	91700	56700	41700	35800	45800	165000	101700	75000	61700	81700	M16
519-616	96700	58300	43300	38300	48300	175000	105000	78300	68300	86700	M16
520-617	103300	61700	46700	41700	51700	183300	111700	83300	75000	93300	M20
522-619	113300	68300	51700	45800	56700	200000	123300	93300	81700	101700	M20
524-620	131600	78300	58300	53300	66700	233300	141700	105000	95000	120000	M20
526	150000	90000	68300	60000	75000	250000	146700	110000	98300	123300	M24
528	175000	105000	78500	71700	88300	283300	166700	128300	116700	143300	M24
530	200000	121700	93300	80000	100000	333300	200000	148300	131700	165000	M24
532	241700	143300	106700	95000	120000	391700	233300	166700	151700	191700	M24

NOTE: For torque values refer to page 39.

Pillow Block Housing Safe Loads
Series: SAFD 200, SAFD 500

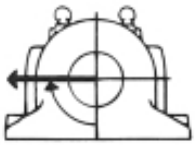
$P_{90°}$


$P_{120°}$


$P_{150°}$


$P_{180°}$

	Recommended Safe Load (N)								
	SAFD				FSAFD				
Size	P 90°	P 120°	P 150°	P 180°	P 90°	P 120°	P 150°	P 180°	Cap Bolt
509, 209	32500	19600	18000	21200	-	-	-	-	7/16 - 14
510, 210	40000	26000	23600	28500	-	-	-	-	7/16 - 14
511, 211	44000	27500	25000	30500	-	-	-	-	1/2 - 13
513, 213	44000	26000	23200	27500	-	-	-	-	1/2 - 13
515, 215	61000	36500	33500	40000	45500	28500	25500	31000	1/2 - 13
516, 216	83000	51000	45000	53000	83000	50000	45000	53000	5/8 - 11
517, 217	47500	29000	26500	32000	50000	31500	28500	34000	5/8 - 11
518, 218	85000	54000	48000	60000	95000	61000	55000	65500	5/8 - 11
520, 220	85000	53000	48000	58500	106000	65500	60000	71000	5/8 - 11
522, 222	108000	67000	61000	72000	-	-	-	-	5/8 - 11
524, 224	150000	95000	88000	108000	-	-	-	-	5/8 - 11
526, 226	186000	125000	118000	153000	-	-	-	-	3/4 - 10
528, 228	183000	116000	106000	127000	-	-	-	-	7/8 - 9
530, 230	236000	150000	134000	166000	-	-	-	-	7/8 - 9
532, 232	208000	132000	120000	146000	-	-	-	-	7/8 - 9
534, 234	208000	127000	114000	132000	-	-	-	-	7/8 - 9
536, 236	320000	196000	176000	204000	-	-	-	-	7/8 - 9
538, 238	250000	153000	134000	250000	-	-	-	-	1 - 8
540, 240	335000	208000	186000	224000	-	-	-	-	1 - 8
544, 244	415000	260000	236000	285000	-	-	-	-	1 - 8

NOTE: For torque values refer to page 39.

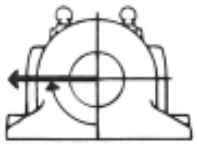
$P_{90°}$


$P_{120°}$


$P_{150°}$


$P_{180°}$

	Recommended Safe Load (N)								
	SAF				FSAF				
Size	P 90°	P 120°	P 150°	P 180°	P 90°	P 120°	P 150°	P 180°	Cap Bolt
509	12700	7650	6800	8150	-	-	-	-	7/16 - 14
510	17600	11200	10200	12500	-	-	-	-	7/16 - 14
511	27133	17347	15790	19126	-	-	-	-	1/2 - 13
513	30500	18000	16300	19000	-	-	-	-	1/2 - 13
515	45500	28000	25500	30500	32500	20400	18600	22400	1/2 - 13
516, 216	50000	30500	26500	31500	36500	22000	19600	23200	5/8 - 11
517, 217	51000	31500	28500	34500	37000	23200	21200	25500	5/8 - 11
518, 218	22502	38500	34694	49817	60938	38475	34694	42246	5/8 - 11
520, 220, 024	81398	50707	46259	55600	71168	44480	40032	48928	3/4 - 10
522, 222, 026	88960	55600	50707	60937	-	-	-	-	3/4 - 10
524, 224, 028	111200	72502	66720	81398	-	-	-	-	1 - 8
526, 226, 030, 032	113424	73837	68054	84512	-	-	-	-	1 - 8
528, 228, 034	149008	94297	85846	103194	-	-	-	-	1 - 8
530, 230	137000	88000	80000	96500	-	-	-	-	3/4 - 10
532, 232, 036, 038	135664	85846	78285	94298	-	-	-	-	3/4 - 10
534, 234, 040	140112	85846	76950	92518	-	-	-	-	3/4 - 10
536, 236	140112	85846	75616	88960	-	-	-	-	3/4 - 10
538, 238, 044	193472	106752	94298	113424	-	-	-	-	7/8 - 9
540, 240, 048	217952	135664	120096	144560	-	-	-	-	7/8 - 9
544, 244, 052	253536	160128	144560	173472	-	-	-	-	1 - 8
056	271328	169024	151232	184592	-	-	-	-	1 1/2 - 6

NOTE: For torque values refer to page 39.

Pillow Block Housing Safe Loads
Series: (F)SAF 300, (F)SAF 600

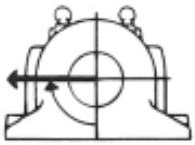
$P_{90°}$


$P_{120°}$


$P_{150°}$


$P_{180°}$

	Recommended Safe Load (N)								
	SAF				FSAF				
Size	P 90°	P 120°	P 150°	P 180°	P 90°	P 120°	P 150°	P 180°	Cap Bolt
308	19600	12500	.11400	14000	-	-	-	-	1/2 - 13
609, 309	21200	13200	12200	15000	-	-	-	-	1/2 - 13
610, 310	23600	14456	12900	16000	-	-	-	-	1/2 - 13
611, 311	26000	16235	15000	17792	21350	13344	12200	14456	1/2 - 13
312	29801	18459	16680	20238	25354	15790	14000	16902	1/2 - 13
613, 313	49818	30246	26688	31581	36250	21800	19570	23130	5/8 - 11
314	55600	34694	30914	37808	55600	34700	30900	37800	5/8 - 11
615, 315	72502	45370	40700	49818	60938	38475	34694	42256	5/8 - 11
616, 316	51597	32025	29134	34694	55600	34027	30914	36918	3/4 - 10
617, 317	56490	35584	32026	38475	62272	39142	35584	42923	3/4 - 10
618, 318	76950	48928	44480	54266	-	-	-	-	3/4 - 10
620, 320	111200	72502	66720	81398	-	-	-	-	1 - 8
622, 322	113424	73837	68054	84512	-	-	-	-	1 - 8
624, 324	137880	87180	80064	96077	-	-	-	-	3/4 - 10
626, 326	135664	85846	78285	94298	-	-	-	-	3/4 - 10
628, 328	140112	85846	76950	92518	-	-	-	-	3/4 - 10
630, 330	140112	84512	75616	88960	-	-	-	-	3/4 - 10
632, 332	173472	106752	94298	113424	-	-	-	-	7/8 - 9
634, 334	217952	135664	120096	144560	-	-	-	-	7/8 - 9
638, 338	253536	160128	151232	184592	-	-	-	-	1 - 8

NOTE: For torque values refer to page 39.

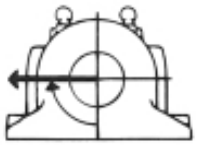
$P_{90°}$


$P_{120°}$


$P_{150°}$


$P_{180°}$

	Recommended Safe Load (N)								
	SAFS				SAFS-11				
Size	P 90°	P 120°	P 150°	P 180°	P 90°	P 120°	P 150°	P 180°	Cap Bolt
515	59603	36918	33360	40032	45370	28467	25353	30914	1/2 - 13
516, 216	82733	49818	44480	52486	82733	49818	44818	52486	5/8 - 11
517, 217	47149	29134	26688	32026	49818	31581	28467	34027	5/8 - 11
518, 218	84512	53376	48038	58714	94297	59603	54265	64941	1/2 - 13
520, 220, 024	84512	52486	48038	57379	104973	64941	58713	71168	5/8 - 11
522, 222, 026	106752	66720	59603	72502	-	-	-	-	5/8 - 11
524, 224, 028	149008	94298	87181	106752	-	-	-	-	5/8 - 11
526, 226, 030, 032	184592	124544	117872	151232	-	-	-	-	3/4 - 10
528, 228, 034	180144	115648	104973	126768	-	-	-	-	7/8 - 9
530, 230	235744	149008	135664	162352	-	-	-	-	7/8 - 9
532, 232, 036, 038	206832	133440	120096	144560	-	-	-	-	7/8 - 9
534, 234, 040	206832	126768	113424	133440	-	-	-	-	1 - 8
536, 236	320256	195712	173472	202384	-	-	-	-	1 3/8 - 6
538, 238, 044	249088	151232	135664	160128	-	-	-	-	1 1/8 - 7
540, 240, 048	333600	206832	184592	222400	-	-	-	-	1 1/4 - 7
544, 244, 052	413664	260208	235744	284672	-	-	-	-	1 3/8 - 6

NOTE: For torque values refer to page 39.

Pillow Block Housing Safe Loads
Series: SDCD 30, SDCD 30/MC14, SDCD 0, SDCD 0/MC14, SDCD 31, SDCD 31/MC14, SDCD 1, SDCD 1/MC14, SDCD 32, SDCD 32/MC14, SDCD 2, SDCD 2/MC14

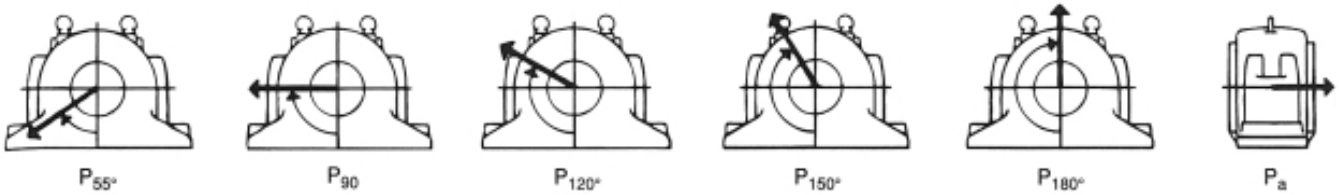

Recommended Safe Load (N)									
Size	SDCD								
	P 55°	P 90°	P 120°	P 150°	P 180°	Pa	Cap Bolt 3000	Cap Bolt 3100	Cap Bolt 3200
(3)034, (3)134, (3)234	630000	300000	228000	204000	255000	165000	7/8 - 9	7/8 - 9	1 - 8
(3)036, (3)136, (3)236	720000	345000	255000	228000	285000	186000	7/8 - 9	7/8 - 9	1 - 8
(3)038, (3)138, (3)238	810000	390000	300000	264000	330000	213000	7/8 - 9	1 - 8	1 - 8
(3)040, (3)140, (3)240	960000	480000	330000	300000	390000	252000	1 - 8	1 - 8	1 1/4 - 7
(3)044, (3)144, (3)244	1200000	570000	420000	390000	480000	300000	1 - 8	1 - 8	1 1/4 - 7
(3)048, (3)148, (3)248	1260000	600000	450000	420000	510000	330000	1 - 8	1 1/4 - 7	1 1/4 - 7
(3)052, (3)152, (3)252	1410000	690000	510000	450000	570000	360000	1 1/4 - 7	1 1/4 - 7	1 1/4 - 7
(3)056, (3)156, (3)256	1500000	720000	540000	480000	600000	390000	1 1/4 - 7	1 1/4 - 7	1 1/4 - 7
(3)060, (3)160, (3)260	1800000	870000	660000	570000	720000	450000	1 1/4 - 7	1 1/4 - 7	1 1/4 - 7
(3)064, (3)164, (3)264	2106000	1021000	750000	660000	840000	540000	1 1/4 - 7	1 1/4 - 7	1 1/2 - 6
(3)068, (3)168, (3)268	2646000	1260000	961000	840000	1051000	1051000	1 1/4 - 7	1 1/2 - 6	1 3/4 - 5
(3)072, (3)172, (3)272	2761000	1321000	990000	900000	1111000	1111000	1 1/4 - 7	1 1/2 - 6	1 3/4 - 5
(3)076, (3)176, (3)276	2761000	1321000	990000	900000	1111000	1111000	1 1/4 - 7	1 3/4 - 5	1 3/4 - 5
(3)080, (3)180, (3)280	3060000	1400000	1111000	990000	1231000	1231000	1 1/2 - 6	1 3/4 - 5	1 3/4 - 5
(3)084, (3)184	3456000	1650000	1260000	1111000	1381000	1381000	1 3/4 - 5	1 3/4 - 5	-
(3)088, (3)188	3834000	1836000	1381000	1231000	1530000	1530000	1 3/4 - 5	1 3/4 - 5	-

NOTE: For torque values refer to page 39.

Recommended Safe Load (N)									
Size			SNL						
3000	3100	3200	P 55°	P 90°	P 120°	P 150°	P 180°	Pa	Cap Bolt
3036			350	167	127	113	118	92	M24
	3134		350	167	127	113	142	92	M24
3038	3136		400	192	142	127	158	103	M24
3040	3138	3234, 3236	450	217	167	147	183	118	M24
3044	3140	3238	533	267	183	167	217	140	M24
3048	3144	3240	667	317	233	217	267	167	M24
3052	3148		700	333	250	233	283	183	M30
3044		3244	700	333	250	233	283	108	M30
3056	3152		783	383	283	250	317	200	M30
3048		3248	783	383	283	250	317	112	M30
3060	3156		833	400	300	267	333	217	M30
3064	3160		1000	483	367	317	400	250	M30
		3252	1000	483	367	317	400	192	M30
		3256	1000	483	367	317	400	200	M30
3068, 3072	3164		1167	567	417	367	467	300	M30
		3260	1167	567	417	367	467	267	M30
3076	3168		1260	600	433	383	500	317	M36
		3264	1260	600	433	383	500	242	M36
3080	3172		1283	600	450	400	500	333	M36
3084	3176		1333	650	483	417	533	350	M36
		3268	1333	650	483	417	533	308	M36
3088	3180		1450	700	517	450	583	367	M36
3272		3272	1450	700	517	450	583	267	M36
3092, 3096	3184		1600	767	567	500	633	400	M42
		3276	1600	767	567	500	633	350	M42
30/500	3188		1667	800	600	517	667	417	M42
		3280	1667	800	600	517	667	400	M42
	3192		1783	867	633	550	700	450	M42
		3284	1783	867	633	550	700	433	M42
30/530	3196		1867	900	667	583	733	467	M42
		3288	1867	900	667	583	733	450	M42

NOTE: For torque values refer to page 39.

Shaft Length from Centre Line of Bearing to End of Shaft for Pillow Block Closed on One Side

Recommended shaft length from centre line of the bearing when one end of the pillow block housing is closed on the locknut side for shaft mounted cylindrical bore, or adapter sleeve mounted bearings.

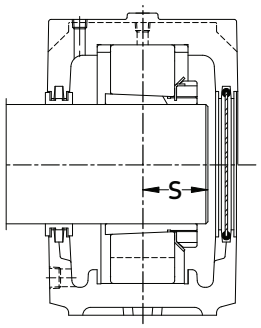

Basic Bearing Number		Recommended Shaft Length "S"	
		mm.	in.
1205 E		18,5	23/32
1206 E		19	3/4
1207 E		20,5	13/16
1208 E		22	7/8
1209 E		23,5	15/16
1210 E		25	1
1211 E		25,5	1
1212 E		27	1 1/16
1213 E		28,5	1 1/8
1215		30,5	1 7/32
1216		33	1 5/16
1217		35	1 3/8
1218		38	1 1/2
1219		40	1 19/32
1220		42	1 21/32
1222		45	1 3/4
1305 E	21305 CC	19,5	3/4
1306 E	21306 CC	20,5	13/16
1307 E	21307 CC	23,5	15/16
1308 E	21308 EW	24,5	31/32
1309 E	21309 E	26,5	1 1/16
1310 E	21310 E	28,5	1 1/8
1311 E	21311 E	29,5	1 5/32
1312 E	21312 E	31,5	1 1/4
1313 E	21313 E	33,5	1 5/16
1315	21315 E	36,5	1 7/16
1316	21316 E	39,5	1 9/16
1317	21317 E	41,5	1 5/8
1318	21318 E	42,5	1 11/16
1320	21320 E	48,5	1 29/32
1322		51	2
2205 E	22205 E	20	25/32
2206 E	22206 E	21	13/16
2207 E	22207 E	24,5	31/32
2208 E	22208 E	24,5	31/32

Basic Bearing Number		Recommended Shaft Length "S"	
		mm.	in.
2209 E	22209 E	25,5	1
2210 E	22210 E	26,5	1 1/16
2211 E	22211 E	27,5	1 3/32
2212 E	22212 E	30	1 3/16
2213 E	22213 E	32,5	1 9/32
2215 E	22215 E	34,5	1 3/8
2216 E	22216 E	36,5	1 7/16
2217	22217 E	39	1 17/32
2218	22218 E	43	1 11/16
2219	22219 E	47	1 7/8
2220	22220 E	51	2
2222	22222 E	52,5	2 1/16
	22224 E	56	2 7/32
	22226 E	60	2 3/8
	22228 CC	63	2 1/2
	22230 CC	69	2 23/32
	22232 CC	74,5	2 15/16
	22234 CC	78,5	3 3/32
	22236 CC	79,5	3 1/8
	22238 CC	83,5	3 9/32
	22240 CC	87,5	3 7/16
	22244 CC	97	3 13/16
2305		23	29/32
2306		24,5	31/32
2307 E		27,5	1 3/32
2308 E	22308 E	29,5	1 5/32
2309 E	22309 E	32	1 1/4
2310	22310 E	35	1 3/8
2311	22311 E	36,5	1 7/16
2312	22312 E	39	1 17/32
2313	22313 E	41	1 5/8
	22314 E	42,5	1 11/16
2315	22315 E	45,5	1 13/16
2316	22316 E	49	1 15/16
2317	22317 E	51	2
	22318 E	55	2 5/32
	22319 E	57,5	2 1/4

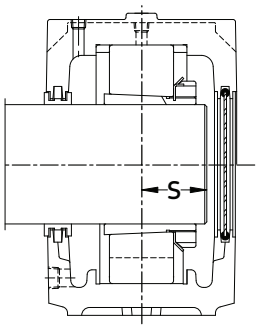

Shaft Length from Centre Line of Bearing to End of Shaft for Pillow Block Closed on One Side

Recommended shaft length from centre line of the bearing when one end of the pillow block housing is closed on the locknut side for shaft mounted cylindrical bore, or adapter sleeve mounted bearings.

Basic Bearing Number	Recommended Shaft Length "S"	
	mm.	in.
22320 E	61.5	2 7/16
22322 E	66	2 19/32
22324 CC	70	2 3/4
22326 CC	74.5	2 15/16
22328 CC	80	3 5/32
22330 CC	86.5	3 13/32
22332 CC	91.5	3 19/32
22334 CC	95.5	3 3/4
22336 CC	99.5	3 29/32
22338 CC	103,5	4 1/16
22340 CC	107,5	4 7/32
23024 CC	50	1 31/32
23026 CC	54	2 1/8
23028 CC	55.5	2 3/16
23030 CC	60.5	2 3/8
23032 CC	64	2 1/2
23034 CC	68.5	2 11/16
23036 CC	73	2 7/8
23038 CC	74.5	2 15/16
23040 CC	79	3 1/8
23044 CC	83	3 9/32
23048 CC	88	3 15/32
23052 CC	94	3 11/16
23056 CC	99	3 29/32
23060 CC	109	4 9/32
23064 CC	110,5	4 11/32
23068 CC	119,5	4 23/32
23072 CC	120	4 23/32
23076 CC	123,5	4 7/8
23080 CAC	134	5 9/32
23084 CA	135	5 5/16
23088 CA	157	6 3/16
23134 CC	79.5	3 5/32
23136 CC	84.5	3 11/32
23138 CC	89.5	3 17/32

Basic Bearing Number	Recommended Shaft Length "S"	
	mm.	in.
23140 CC	94.5	3 23/32
23144 CC	103	4 1/16
23148 CC	109	4 9/32
23152 CC	124	4 7/8
23156 CC	127	5
23160 CC	128	5 1/16
23164 CC	138	5 7/16
23168 CC	158	6 7/32
23172 CC	164	6 15/32
23176 CA	165	6 1/2
23180 CA	170	6 11/16
23184 CJ	190	7 1/2
23188 CA	191	7 17/32
23218 CC	49.5	1 15/16
23220 CC	55.5	2 3/16
23222 CC	61	2 15/32
23224 CC	65	2 9/16
23226 CC	68	2 11/16
23228 CC	73	2 7/8
23230 CC	80.5	3 3/16
23232 CC	86.5	3 13/32
23234 CC	90.5	3 9/16
23236 CC	92.5	3 21/32
23238 CC	97.5	3 27/32
23240 CC	102,5	4 1/32
23244 CC	115	4 17/32
23248 CC	125	4 15/16
23252 CC	134	5 9/32
23256 CC	136	5 3/8
23260 CC	144	5 11/16
23264 CC	154	6 1/16
23268 CA	175	6 7/8
23272 CA	182	7 3/16
23276 CA	188	7 13/32
23280 CA	198	7 13/16

Axial displacement using CARB® bearings in SNL housings

The permissible axial displacement in a CARB bearing is dependent on the clearance remaining in the bearing after mounting: the larger the residual radial internal clearance, the larger the permissible axial displacement of one ring in relation to the other. This axial displacement reduces the clearance in the bearing until at a given displacement, the clearance disappears altogether or the rollers may start to be exposed at one side of the bearing.

The table opposite shows the maximum permissible axial displacement for each CARB bearing when mounted normally and having initial normal radial internal clearance. It is assumed that there is little difference in temperature between the inner and outer ring.

When the rings are displaced a certain distance, the roller and cage assembly will move through the bearing, or alternately, if the outer ring moves out from the bearing the roller and cage assembly could contact the locknut or locking washer.

For bearings of series C22 K up to and including size 22, KMFE locknuts are utilized. These have an extension on the face of the nut, which has a smaller diameter than the O.D of the inner ring, which prevents contact from occurring. Adapter sleeves with this nut are identified by the suffix E.

The C23 K series uses standard locknuts.

For bearings of series C22 K and C 32 K, for sizes 24 and above, the adapter sleeves are supplied together with a KML locknut and MBL lockwasher, indicated by the suffix L in the adapter sleeve designation. (L = low section height)

On some larger sizes adapter sleeves suffix HTL indicates that a different adapter sleeve is used.

It should be observed that the possible axial displacement of the shaft relative to the housing might be limited by the type of the seal used.

Axial Displacement of CARB Bearings			
Bearing	**Housing Size**	**Axial displacement s[1] for mounted CARB bearings with initial radial internal clearance Normal**	**Sleeves of the appropriate bore size will have locknuts numbered**
-	-	mm	-
C 2205 K	SNL 505	2,3	KMFE 5
C 2206 K	SNL 506-605	2,3	KMFE 6
C 2207 K	SNL 507-606	2,8	KMFE 7
C 2208 K	SNL 508-607	2,7	KMFE 8
C 2209 K	SNL 509	3,1	KMFE 9
C 2210 K	SNL 510-608	2,9	KMFE 10
C 2211 K	SNL 511-609	3,5	KMFE 11
C 2212 K	SNL 512-610	3,6	KMFE 12
C 2213 K	SNL 513-611	3,7	KMFE 13
C 2215 K	SNL 515-612	4,4	KMFE 15
C 2315 K	SNL 518-615	5,9	KM 15
C 2216 K	SNL 516-613	4,4	KMFE 16
C 2316 K	SNL 519-616	5,7	KM 16
C 2217 K	SNL 517	5,1	KMFE 17
C 2317 K	SNL 520-617	6,5	KM 17
C 2218 K	SNL 518-615	5,2	KMFE 18
C 2220 K	SNL 520-617	5,4	KMFE 20
C 2320 K	SNL 524-620	6,8	KM 20
C 2222 K	SNL 522-619	6,7	KMFE 22
C 3224 K	SNL 524	7,8	KML 24
C 2226 K	SNL 526	8,0	KML 26
C 2228 K	SNL 528	8,0	KML 28
C 2230 K	SNL 530	9,3	KML 30
C 3232 K	SNL 532	10,5	KML 32

s[1] is the maximum permissible displacement of one ring with respect to the other in one direction; the total axial displacement is twice as large.

Pillow Block Housings

SNL, SSNLD

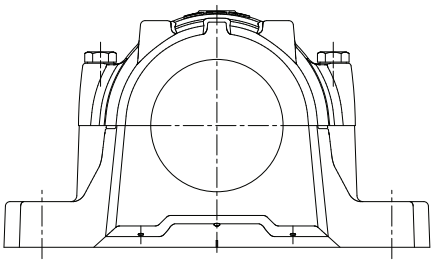

MATERIAL	SNL: cast iron GG20 (ISO/DIS 185 grade 200) SSNLD: Ductile iron	
BEARING SERIES USED	12K, 12EK, 13K, 22K, 22EK, 23K, 222CCK, 222EK, 223CCK, 223EK C 22K, C 23K, C 32K	
SHAFT SIZE RANGE	3/4" TO 5-1/2"	20mm TO 140mm
PILLOW BLOCK SIZE	505 - 532 (adapter mounting)	
PILLOW BLOCK LUBRICATION	Grease (for oil lubrication consult SKF)	
STANDARD SEALS	TSN-G 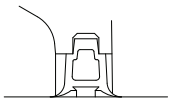	TSN-L 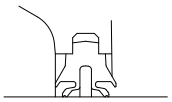
OPTIONAL SEALS	TSN-A 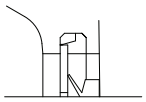	TSN-C 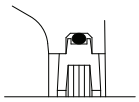
	TSN-S 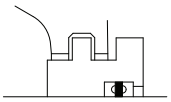	TSNC-D 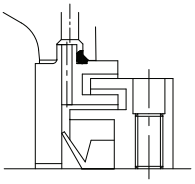
	TSNC-E 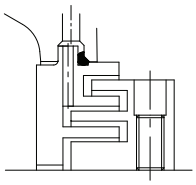	TSNC/MC17 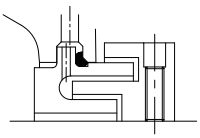
	Taconite TSN-ND 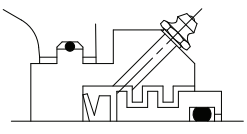	

Note : Pillow Block SNL & SSNLD must be modified to MC106 when using TSNC-D & E for sizes 520 through 532 and TSNC/MC17 for sizes 515 through 518.

SNL Split Pillow Blocks Nomenclature Adapter Mount

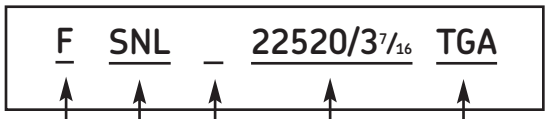

Base

~~0~~	Two bolt (standard)
F	Four bolt
S	Blank (dimples only)*

Basic Design

Material

~~0~~	Cast iron
D	Ductile iron

Size

Bearing bore: 20 = 100mm
Shaft size: 3 7/16"

Suffixes

D	Purgeable labyrinth seal (TSNC-D c/w V ring) (1/pkg)
E	Purgeable labyrinth seal (TSNC-E, without V ring) (1/pkg)
H	Held unit, 2 fixing rings included
K7	Tighter housing fit that can be used with CARB bearings for high speeds or vibration
NM	Suffix required on sizes SNL 524-620 to SNL 532 indicating central relubrication hole for W33 bearings
TA	V ring "A" seal (2/pkg)
TC	Felt "C" seal (2/pkg)
TG	Double lip "G" seal (2/pkg)
TL	Double lip "L" seal for metric sizes; Only TSN 507 toTSN 522 are available as of March 2007 (2/pkg)
TND	Taconite seal (1/pkg)
TS	Standard labyrinth "S" seal (1/pkg)
V	Open grease escape hole in base
VU	Two grease escape holes diagonally opposed on the side faces
Y	One end closed with end cover or end plug

How to order SNL: (Example)

When you order one SNL 22520-3 7/16 TGA you will receive a package containing the following:

1 - Pillow block housing SNL 520-617: Cap drilled, tapped, and one grease fitting AH 1/8 - 27 PTF included
1 - Bearing SKF 22220 EK
1 - Adapter sleeve HA 320, complete with locknut KM20 and lockwasher MB20
1 - Seal kit TSN 520 GA, containing 2 double lip seals to "G" design

If a "HELD" or "FIXED" unit is required, add the suffix "H" and two FRB 12/180 fixing rings will be included.
Only one bearing per shaft should be held. CARB® bearings displace internally and are therefore always "FREE".
However they must always be located in the housing with fixing rings, as does a true "FIXED" bearing.
If a unit with one end closed is required, add the suffix "Y" and one ASNH 520-617 end cover will be included.

*** CAUTION: If replacing a drilled blank base unit with a 4 hole base unit, the holes are NOT in the same position.**

SNL Inch Size Seals + V ring Numbers for Replacement in V ring Seals

The catalogue references G or L* design seals only, if a different seal is desired, the suffixes may change. The following shows the appropriate number for the optional seals.

Shaft Dia. d_a	Housing	Complete V-ring seal nr	Replacement Current pt. nr.	V-ring only Former pt. nr.	Felt Seal C	Double Lip seal G or L	Labyrinth Seal S	End Cover
		2/pkg	2/pkg	2/pkg	2/pkg	2/pkg	1/pkg	1/pkg
3/4	SNL 505	TSN 505A	400200	V20A	TSN 505C	TSN 505GE	TSN 505SE	ASNH505
	SNL 506-605	TSN 605A	400200	V20A	TSN 605C	TSN 605GE	TSN 605SE	ASNH 506-605
15/16	SNL 506-605	TSN 506A	400250	V25A	TSN 506C	TSN 506GA	TSN 506SA	ASNH 506-605
	SNL 507-606	TSN 606A	400250	V25A	TSN 606C	TSN 606GA	TSN 606SA	ASNH 507-606
1	SNL 506-605	TSN 506A	400250	V25A	TSN 506C	TSN 506L	TSN 506SE	ASNH 506-605
	SNL 507-606	TSN 606A	400250	V25A	TSN 506C	TSN 606GA	TSN 606SE	ASNH 507-606
1 3/16	SNL 507-606	TSN 507A	400300	V30A	TSN 507C	TSN 507L	TSN 507SA	ASNH 507-606
	SNL 508-607	TSN 607A	400300	V30A	TSN 607C	TSN 607G	TSN 607SA	ASNH 508-607
1 1/4	SNL 508-607	TSN 508AE	400320	V32A	TSN 508CE	TSN 508GE	TSN 508SE	ASNH 508-607
	SNL 510-608	TSN 608AE	400320	V32A	TSN 608CE	TSN 608GE	TSN 608SE	ASNH 510-608
1 7/16	SNL 509	TSN 509AE	400380	V38A	TSN 509CE	TSN 509GA	TSN 509SA	ASNH 509
	SNL 511-609	TSN 609AE	400380	V38A	TSN 609CE	TSN 609GA	TSN 609SA	ASNH 511-609
1 1/2	SNL 509	TSN 509AE	400380	V38A	TSN 509CE	TSN 509GE	TSN 509SE	ASNH 509
	SNL 511-609	TSN 609AE	400380	V38A	TSN 609CE	TSN 609GE	TSN 609SE	ASNH 511-609
1 11/16	SNL 510-608	TSN 510A	400450	V45A	TSN 510C	TSN 510GA	TSN 510SA	ASNH 510-608
	SNL 512-610	TSN 610A	400450	V45A	TSN 610C	TSN 610GA	TSN 610SA	ASNH 512-610
1 3/4	SNL 510-608	TSN 510A	400450	V45A	TSN 510C	TSN 510L	TSN 510SE	ASNH 510-608
	SNL 512-610	TSN 610A	400450	V45A	TSN 610C	TSN 610G	TSN 610SE	ASNH 512-610
1 15/16	SNL 511-609	TSN 511A	400500	V50A	TSN 511C	TSN 511L	TSN 511SA	ASNH 511-609
	SNL 513-611	TSN 611A	400500	V50A	TSN 611C	TSN 611G	TSN 611GA	ASNH 513-611
2	SNL 511-609	TSN 511A	400500	V50A	TSN 511C	TSN 511L	TSN 511SE	ASNH 511-609
	SNL 513-611	TSN 611A	400500	V50A	TSN 611C	TSN 611G	TSN 611SE	ASNH 513-611
2 1/8	SNL 512-610	TSN 512A	400550	V55A	TSN 512C	TSN 512GS	TSN 512SS	ASNH 512-610
	SNL 515-612	TSN 612A	400550	V55A	TSN 612C	TSN 612GS	TSN 612SS	ASNH 515-612
2 3/16	SNL 513-611	TSN 513AE	400550	V55A	TSN 513CE	TSN 513GA	TSN 513SA	ASNH 513-611
	SNL 516-613	TSN 613AE	400550	V55A	TSN 613CE	TSN 613GA	TSN 613SA	ASNH 516-613
2 1/4	SNL 513-611	TSN 513A	400600	V60A	TSN 513CE	TSN 513GE	TSN 513SE	ASNH 513-611
	SNL 516-613	TSN 613A	400600	V60A	TSN 613CE	TSN 613GE	TSN 613SE	ASNH 516-613
2 7/16	SNL 515-612	TSN 515AE	400600	V60A	TSN 515CE	TSN 515GA	TSN 515SA	ASNH 515-612
	SNL 518-615	TSN 615AE	400600	V60A	TSN 615CE	TSN 615GA	TSN 615SA	ASNH 518-615
2 1/2	SNL 515-612	TSN 515A	400650	V65A	TSN 515C	TSN 515GE	TSN 515SE	ASNH 515-612
	SNL 518-615	TSN 615A	400650	V65A	TSN 615C	TSN 615GE	TSN 615SE	ASNH 518-615

SNL Inch Size Seals + V ring Numbers for Replacement in V ring Seals

The catalogue references G or L* design seals only, if a different seal is desired, the suffixes may change. The following shows the appropriate number for the optional seals.

Shaft Dia. d_a	Housing	Complete V-ring seal nr	Replacement Current pt. nr.	V-ring only Former pt. nr.	Felt Seal C	Double Lip seal G or L	Labyrinth Seal S	End Cover
		2/pkg	2/pkg	2/pkg	2/pkg	2/pkg	1/pkg	1/pkg
2 11/16	SNL 516-613	TSN 516A	400700	V70A	TSN 516C	TSN 516GA	TSN 516SA	ASNH 516-613
	SNL 519-616	TSN 616A	400700	V70A	TSN 616C	TSN 616GA	TSN 616SA	ASNH 519-616
2 3/4	SNL 516-613	TSN 516A	400700	V70A	TSN 516C	TSN 516L	TSN 516SE	ASNH 516-613
	SNL 519-616	TSN 616A	400700	V70A	TSN 616C	TSN 616G	TSN 616SE	ASNH 519-616
2 15/16	SNL 517	TSN 517A	400750	V75A	TSN 517C	TSN 517L	TSN 517SA	ASHN 517
	SNL 520-617	TSN 617A	400750	V75A	TSN 617C	TSN 617G	TSN 617SA	ASNH 520-617
3	SNL 517	TSN 517A	400750	V75A	TSN 517C	TSN 517L	TSN 517SE	ASNH 517
	SNL 520-617	TSN 617A	400750	V75A	TSN 617C	TSN 617G	TSN 617SE	ASNH 510-617
3 3/16	SNL 518-615	TSN 518A	400800	V80A	TSN 518CE	TSN 518L	TSN 518SA	ASNH 518-615
3 1/4	SNL 518-615	TSN 518A	400800	V80A	TSN 518CE	TSN 518GE	TSN 518SE	ASNH 518-615
	SNL 522-619	TSN 619A	400850	V85A	TSN 619C	TSN 619GE	TSN 619SE	ASNH 522-619
3 7/16	SNL 520-617	TSN 520A	400900	V90A	TSN 520C	TSN 520GA	TSN 520SA	ASNH 520-617
	SNL 524-620	TSN 620A	400900	V90A	TSN 620C	TSN 620GA	TSN 620SA	ASNH 524-620
3 1/2	SNL 520-617	TSN 520A	400900	V90A	TSN 520C	TSN 520GE	TSN 520SE	ASNH 520-617
	SNL 524-620	TSN 620A	400900	V90A	TSN 620C	TSN 620GE	TSN 620SE	ASNH 524-620
3 15/16	SNL 522-619	TSN 522A	401000	V100A	TSN 522C	TSN 522L	TSN 522SA	ASNH 522-619
4	SNL 522-619	TSN 522A	401000	V100A	TSN 522C	TSN 522L	TSN 522SE	ASNH 522-619
4 3/16	SNL 524-620	TSN 524A	401100	V110A	TSN 524CE	TSN 524GA	TSN 524SA	ASNH 524-620
4 1/4	SNL 524-620	TSN 524A	401100	V110A	TSN 524C	TSN 524GE	TSN 524SE	ASNH 524-620
4 7/16	SNL 526	TSN 526A	401100	V110A	TSN 526C	TSN 526GA	TSN 526SA	ASNH 526
4 1/2	SNL 526	TSN 526A	401100	V110A	TSN 526C	TSN 526G	TSN 526SE	ASNH 526
4 15/16	SNL 528	TSN 528A	401300	V130A	TSN 528C	TSN 528G	TSN 528SA	ASNH 528
5	SNL 528	TSN 528A	401300	V130A	TSN 528C	TSN 528 GE	TSN 528SE	ASNH 528
5 3/16	SNL 530	TSN 530A	401300	V130A	TSN 530C	TSN 530GA	TSN 520SA	ASNH 530
5 1/4	SNL 530	TSN 530A	401300	V130A	TSN 530C	TSN 530GE	TSN 530SE	ASNH 530
5 7/16	SNL 532	TSN 532A	401400	V140A	TSN 532C	TSN 532GA	TSN 532SA	ASNH 532
5 1/2	SNL 532	TSN 532A	401400	V140A	TSN532C	TSN 532G	TSN 532SE	ASNH 532

*** New double lip "L" design seals are available in metric dimensions from TSN 507 to TSN 522 only, as of March 2007**

Series SNL 500 and SNL 600 Pillow Blocks of cast iron for bearing with adapter sleeve, grease or oil lubrication
d_a 3/4 - 15/16 in (20 - 25 mm)

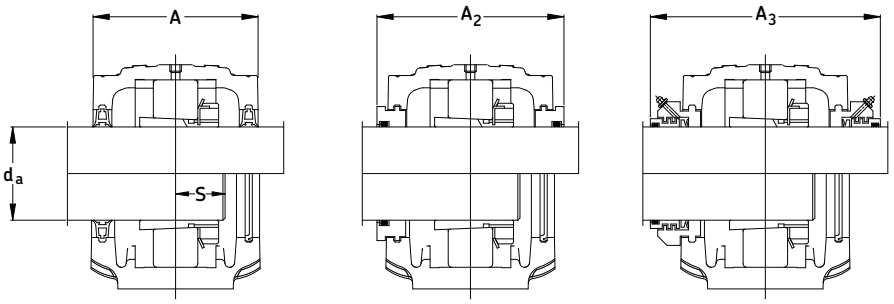

Double-lip seals
G & L design

Labyrinth seals
S design

Taconite seals
ND design

Shaft Dia. d_a	Complete Pillow Block Assembly	Housing	Standard Seal Package	Bearing	Adapter Sleeve	Fixing Rings	Qty.	Mass Complete		End Cover
mm in								lb.	kg.	
3/4	SNL 1505/ 3/4 TGE	SNL 505	TSN 505GE	1205 EK	HE 205	FRB 5/52	2	3.66	1.66	ASNH 505
	SNL 1605/ 3/4 TGE	SNL 506-605	TSN 605GE	1305 EK	HE 305	FRB 7.5/62	2	5.14	2.33	ASNH 506-605
	SNL 2505/ 3/4 TGE	SNL 505	TSN 505GE	2205 EK	HE 305	FRB 3.5/52	2	3.70	1.68	ASNH 505
	SNL 2605/ 3/4 TGE	SNL 506-605	TSN 605GE	2305 EK	HE 2305	FRB 4/62	2	5.31	2.41	ASNH 506-605
	SNL 22505/ 3/4 TGE	SNL 505	TSN 505GE	22205 EK	HE 305	FRB 3.5/52	2	3.75	1.70	ASNH 505
	SNL C2505/ 3/4 TGE	SNL 505	TSN 505GE	C2205 K*	HE 305E	FRB 3.5/52	2	3.75	1.70	ASNH 505
20	SNL 1505/20 TL	SNL 505	TSN 505L	1205 EK	H 205	FRB 5/52	2	3.66	1.66	ASNH 505
	SNL 1605/20 TG	SNL 506-605	TSN 605G	1305 EK	H 305	FRB 7.5/62	2	5.14	2.33	ASNH 506-605
	SNL 2505/20 TL	SNL 505	TSN 505L	2205 EK	H 305	FRB 3.5/52	2	3.70	1.68	ASNH 505
	SNL 2605/20 TG	SNL 506-605	TSN 605G	2305 EK	H 2305	FRB 7.5/62	2	5.31	2.41	ASNH 506-605
	SNL 22505/20 TL	SNL 505	TSN 505L	22205 EK	H 305	FRB 3.5/52	2	3.75	1.70	ASNH 505
	SNL C2505/20 TL	SNL 505	TSN 505L	C2205 K*	H 305E	FRB 3.5/52	2	3.75	1.70	ASNH 505
15/16	SNL 1506/ 15/16 TGA	SNL 506-605	TSN 506GA	1206 EK	HA 206	FRB 8/62	2	5.11	2.32	ASNH 506-605
	SNL 1606/ 15/16 TGA	SNL 507-606	TSN 606GA	1306 EK	HA 306	FRB 7.5/72	2	5.80	2.63	ASNH 507-606
	SNL 2506/ 15/16 TGA	SNL 506-605	TSN 506GA	2206 EK	HA 306	FRB 6/62	2	5.20	2.36	ASNH 506-605
	SNL 2606/ 15/16 TGA	SNL 507-606	TSN 606GA	2306 EK	HA 2306	FRB 3.5/72	2	6.04	2.74	ASNH 507-606
	SNL 22506/ 15/16 TGA	SNL 506-605	TSN 506GA	22206 EK	HA 306	FRB 6/62	2	5.25	2.38	ASNH 506-605
	SNL C2506/ 15/16 TGA	SNL 506-605	TSN 506GA	C2206 K*	HA 306E	FRB 6/62	2	5.25	2.38	ASNH 506-605
25	SNL 1506/25 TL	SNL 506-605	TSN 506L	1206 EK	H 206	FRB 8/62	2	5.11	2.32	ASNH 506-605
	SNL 1606/25 TG	SNL 507-606	TSN 606G	1306 EK	H 306	FRB 7.5/72	2	5.80	2.63	ASNH 507-606
	SNL 2506/25 TL	SNL 506-605	TSN 506L	2206 EK	H 306	FRB 6/62	2	5.20	2.36	ASNH 506-605
	SNL 2606/25 TG	SNL 507-606	TSN 606G	2306 EK	H 2306	FRB 3.5/72	2	6.28	2.82	ASNH 507-606
	SNL 22506/25 TL	SNL 506-605	TSN 506L	22206 EK	H 306	FRB 6/62	2	5.25	2.38	ASNH 506-605
	SNL C2506/25 TL	SNL 506-605	TSN 506L	C2206 K*	H 306E	FRB 6/62	2	5.25	2.38	ASNH 506-605

* Must always be located.

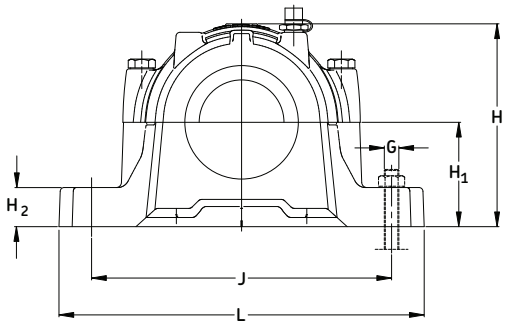

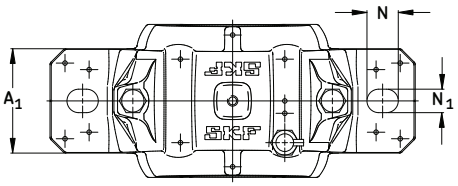

Housing No.	Dimensions													Bolts (2 req'd)	
	A	A_1	A_2	A_3	H	H_1	H_2	J_{max}	J_{min}	J	L	N	N_1	G	S*
	in/mm														
SNL 505	2 5/8	1 13/16	3 3/16	5 1/8	2 15/16	1.575	3/4	5 3/8	4 7/8	5 1/8	6 1/2	3/4	5/8	1/2	*
	67	46	80	130	74	40	19	137	123	130	165	20	15	12	*
SNL 506-605	3 1/16	2 1/16	3 1/2	5 5/16	3 1/2	1.969	7/8	6 1/8	5 11/16	5 15/16	7 5/16	3/4	5/8	1/2	*
	77	52	89	135	89	50	22	157	143	150	185	20	15	12	*
SNL 507-606	3 1/4	2 1/16	3 3/4	5 1/2	3 5/8	1.969	7/8	6 1/8	5 11/16	5 15/16	7 5/16	3/4	5/8	1/2	*
	82	52	94	140	93	50	22	157	143	150	185	20	15	12	*

***NOTE:** Dimension "S" indicates the shaft length from the centre of the bearing to the end of the shaft for housings with one end closed. For tabulation of the dimension "S", see the bearing tables on pages 52 and 53.

For an example on how to order, please see page 57

Series SNL 500 and SNL 600 Pillow blocks of cast iron for bearing with adapter sleeve, grease or oil lubrication d_a 1 - 1 ¼ in (30 mm)

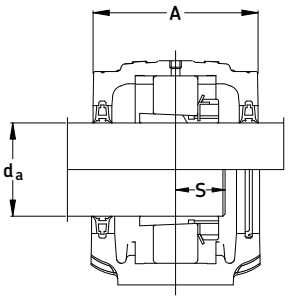

Double-lip seals
G & L design

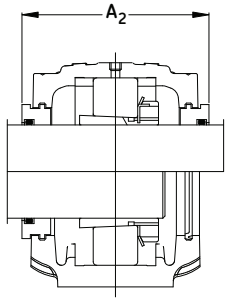

Labyrinth seals
S design

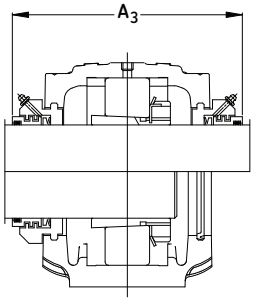

Taconite seals
ND design

Shaft Dia. d_a		Complete Pillow Block Assembly	Housing	Standard Seal Package	Bearing	Adapter Sleeve	Fixing Rings	Qty.	Mass Complete		End Cover
mm	in								lb.	kg.	
	1	SNL 1506/1 TG	SNL 506-605	TSN 506G	1206 EK	HE 206	FRB 8/62	2	5.11	2.32	ASNH 506-605
		SNL 1606/1 TG	SNL 507-606	TSN 606G	1306 EK	HE 306	FRB 7.5/72	2	5.80	2.63	ASNH 507-606
		SNL 2506/1 TG	SNL 506-605	TSN 506G	2206 EK	HE 306	FRB 6/62	2	5.20	2.36	ASNH 506-605
		SNL 2606/1 TG	SNL 507-606	TSN 606G	2306 K	HE 2306	FRB 3.5/72	2	6.28	2.82	ASNH 507-606
		SNL 22506/1 TG	SNL 506-605	TSN 506G	22206 EK	HE 306	FRB 6/62	2	5.25	2.38	ASNH 506-605
		SNL C2506/1 TG	SNL 506-605	TSN 506G	C2206 K*	HE 306E	FRB 6/62	2	5.25	2.38	ASNH 506-605
30		SNL 1507/30 TL	SNL 507-606	TSN 507L	1207 EK	H 207	FRB 8.5/72	2	5.84	2.65	ASNH 507-606
		SNL 1607/30 TG	SNL 508-607	TSN 607G	1307 EK	H 307	FRB 9/80	2	7.80	3.54	ASNH 508-607
		SNL 2507/30 TL	SNL 507-606	TSN 507L	2207 EK	H 307	FRB 5.5/72	2	6.02	2.73	ASNH 507-606
		SNL 2607/30 TG	SNL 508-607	TSN 607G	2307 EK	H 2307	FRB 4/80	2	8.22	3.73	ASNH 507-606
		SNL 22507/30 TL	SNL 507-606	TSN 507L	22207 EK	H 307	FRB 5.5/72	2	6.06	2.75	ASNH 507-606
		SNL C2507/30 TL	SNL 507-606	TSN 507L	C2207 K*	H 307E	FRB 5.5/72	2	6.06	2.75	ASNH 507-606
	1 3/16	SNL 1507/1 3/16TG	SNL 507-606	TSN 507G	1207 EK	HA 207	FRB 8.5/72	2	5.84	2.65	ASNH 507-606
		SNL 1607/1 3/16 TG	SNL 508-607	TSN 607G	1307 EK	HA 307	FRB 9/80	2	7.80	3.54	ASNH 508-607
		SNL 2507/1 3/16 TG	SNL 507-606	TSN 507G	2207 EK	HA 307	FRB 5.5/72	2	6.02	2.73	ASNH 507-606
		SNL 2607/1 3/16 TG	SNL 508-607	TSN 607G	2307 EK	HA 2307	FRB 4/80	2	8.22	3.73	ASNH 507-606
		SNL 22507/1 3/16 TG	SNL 507-606	TSN 507G	22207 EK	HA 307	FRB 5.5/72	2	6.06	2.75	ASNH 507-606
		SNL C2507/1 3/16 TG	SNL 507-606	TSN 507G	C2207 K*	HA 307E	FRB 5.5/72	2	6.06	2.75	ASNH 507-606
	1 ¼	SNL 1508/1 ¼ TGE	SNL 508-607	TSN 508GE	1208 EK	HE 208	FRB 10.5/80	2	7.67	3.48	ASNH 508-607
		SNL 1608/1 ¼ TGE	SNL 510-608	TSN 608GE	1308 EK	HE 308	FRB 9/90	2	9.02	4.09	ASNH 510-608
		SNL 2508/1 ¼ TGE	SNL 508-607	TSN 508GE	2208 EK	HE 208	FRB 8/80	2	9.26	4.20	ASNH 508-607
		SNL 2608/1 ¼ TGE	SNL 510-608	TSN 608GE	2308 EK	HE 2308	FRB 4/90	2	9.55	4.33	ASNH 510-608
		SNL 21608/1 ¼ TGE	SNL 510-608	TSN 608GE	21308 EK	HE 308	FRB 9/90	2	9.02	4.09	ASNH 510-608
		SNL 22508/1 ¼ TGE	SNL 508-607	TSN 508GE	22208 EK	HE 308	FRB 8/80	2	8.16	3.70	ASNH 508-607
		SNL 22608/1 ¼ TGE	SNL 510-608	TSN 608GE	22308 EK	HE 2308	FRB 4/90	2	9.52	4.32	ASNH 510-608
		SNL C2508/1 ¼ TGE	SNL 508-607	TSN 508GE	C2208 K*	HE 308E	FRB 8/80	2	8.16	3.70	ASNH 508-607

* Must always be located.

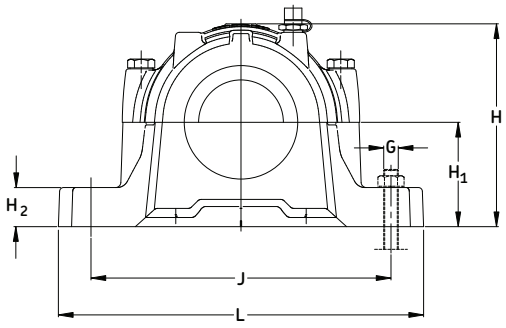

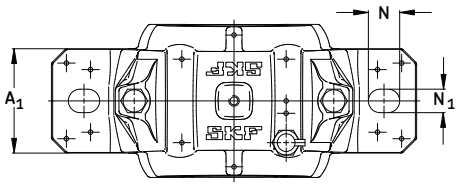

Housing No.	Dimensions													Bolts (2 req'd)	
	A	A_1	A_2	A_3	H	H_1	H_2	J_{max}	J_{min}	J	L	N	N_1	G	S*
	in/mm														
SNL 506-605	3 1/16	2 1/16	3 1/2	5 5/16	3 1/2	1.969	7/8	6 1/8	5 11/16	5 15/16	7 5/16	3/4	5/8	1/2	*
	77	52	89	135	89	50	22	157	143	150	185	20	15	12	*
SNL 507-606	3 1/4	2 1/16	3 3/4	5 1/2	3 5/8	1.969	7/8	6 1/8	5 11/16	5 15/16	7 5/16	3/4	5/8	1/2	*
	82	52	94	140	93	50	22	157	143	150	185	20	15	12	*
SNL 508-607	3 3/8	2 3/8	3 13/16	5 3/4	4 1/4	2.362	1	6 7/8	6 1/2	6 11/16	8 1/8	3/4	5/8	1/2	*
	85	60	97	145	108	60	25	175	165	170	205	20	15	12	*
SNL 510-608	3 9/16	2 3/8	4	5 15/16	4 1/2	2.362	1	6 7/8	6 1/2	6 11/16	8 1/8	3/4	5/8	1/2	*
	90	60	102	150	113	60	25	175	165	170	205	20	15	12	*

***NOTE:** Dimension "S" indicates the shaft length from the centre of the bearing to the end of the shaft for housings with one end closed. For tabulation of the dimension "S", see the bearing tables on pages 52 and 53.

For an example on how to order, please see page 57.

Series SNL 500 and SNL 600 Pillow blocks of cast iron for bearing with adapter sleeve, grease or oil lubrication d_a 1 7/16 - 1 1/2 in (35 mm)

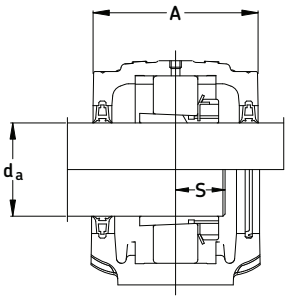

Double-lip seals
G & L design

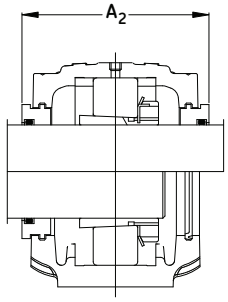

Labyrinth seals
S design

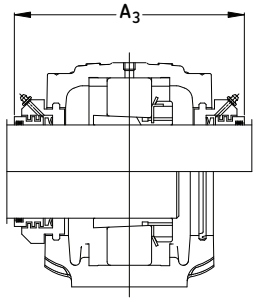

Taconite seals
ND design

Shaft Dia. d_a	Complete Pillow Block Assembly	Housing	Standard Seal Package	Bearing	Adapter Sleeve	Fixing Rings	Qty.	Mass Complete		End Cover
mm in								lb.	kg.	
35	SNL 1508/35 TL	SNL 508-607	TSN 508L	1208 EK	H 208	FRB 10.5/80	2	7.89	3.58	ASNH 508-607
	SNL 1608/35 TG	SNL 510-608	TSN 608G	1308 EK	H 308	FRB 9/90	2	9.02	4.09	ASNH 510-608
	SNL 2508/35 TL	SNL 508-607	TSN 508L	2208 EK	H 308	FRB 8/80	2	8.14	3.69	ASNH 508-607
	SNL 2608/35 TG	SNL 510-608	TSN 608G	2308 EK	H 2308	FRB 4/90	2	9.48	4.32	ASNH 510-608
	SNL 21608/35 TG	SNL 510-608	TSN 608G	21308 EK	H 308	FRB 9/90	2	9.02	4.09	ASNH 510-608
	SNL 22508/35 TL	SNL 508-607	TSN 508L	22208 EK	H 308	FRB 8/80	2	8.16	3.70	ASNH 508-607
	SNL 22608/35 TG	SNL 510-608	TSN 608G	22308 EK	H 2308	FRB 4/90	2	9.52	4.32	ASNH 510-608
	SNL C2508/35 TL	SNL 508-607	TSN 508L	C2208 K*	H 308E	FRB 8/80	2	8.16	3.70	ASNH 508-607
1 7/16	SNL 1509/1 7/16TGA	SNL 509	TSN 509GA	1209 EK	HA 209	FRB 5.5/85	2	7.91	3.59	ASNH 509
	SNL 1609/1 7/16TGA	SNL 511-609	TSN 609GA	1309 EK	HA 309	FRB 9.5/100	2	12.3	5.59	ASNH 511-609
	SNL 2509/1 7/16TGA	SNL 509	TSN 509GA	2209 EK	HA 309	FRB 3.5/85	2	8.18	3.71	ASNH 509
	SNL 2609/1 7/16TGA	SNL 511-609	TSN 609GA	2309 EK	HA 2309	FRB 4/100	2	13.0	5.88	ASNH 511-609
	SNL 21609/1 7/16TGA	SNL 511-609	TSN 609GA	21309 EK	HA 309	FRB 9.5/100	2	12.3	5.59	ASNH 511-609
	SNL 22509/1 7/16TGA	SNL 509	TSN 509GA	22209 EK	HA 309	FRB 3.5/85	2	8.16	3.70	ASNH 509
	SNL 22609/1 7/16TGA	SNL 511-609	TSN 609GA	22309 EK	HA 2309	FRB 4/100	2	13.3	6.03	ASNH 511-609
	SNL C2509/1 7/16TGA	SNL 509	TSN 509GA	C2209 K*	HA 309E	FRB 3.5/85	2	8.16	3.70	ASNH 509
1 1/2	SNL 1509/1 1/2 TGE	SNL 509	TSN 509GE	1209 EK	HE 209	FRB 5.5/85	2	7.91	3.59	ASNH 509
	SNL 1609/1 1/2 TGE	SNL 511-609	TSN 609GE	1309 EK	HE 309	FRB 9.5/100	2	12.3	5.59	ASNH 511-609
	SNL 2509/1 1/2 TGE	SNL 509	TSN 509GE	2209 EK	HE 309	FRB 3.5/85	2	8.18	3.71	ASNH 509
	SNL 2609/1 1/2 TGE	SNL 511-609	TSN 609GE	2309 EK	HE 309	FRB 4/100	2	13.0	5.88	ASNH 511-609
	SNL 21609/1 1/2 TGE	SNL 511-609	TSN 609GE	21309 EK	HE 309	FRB 9.5/100	2	12.3	5.59	ASNH 511-609
	SNL 22509/1 1/2 TGE	SNL 509	TSN 509GE	22209 EK	HE 309	FRB 3.5/85	2	8.16	3.70	ASNH 509
	SNL 22609/1 1/2 TGE	SNL 511-609	TSN 609GE	22309 EK	HE 2309	FRB 4/100	2	13.3	6.03	ASNH 511-609
	SNL C2509/1 1/2 TGE	SNL 509	TSN 509GE	C2209 K*	HE 309E	FRB 3.5/85	2	8.16	3.70	ASNH 509

* Must always be located.

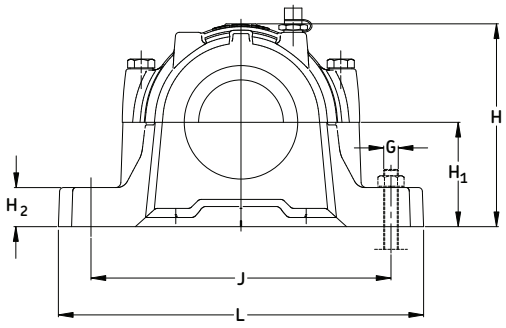

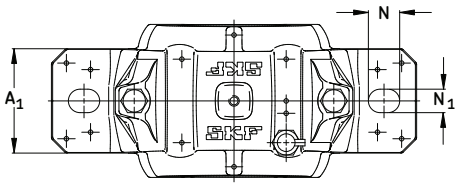

Housing No.	Dimensions													Bolts (2 req'd)	
	A	A_1	A_2	A_3	H	H_1	H_2	J_{max}	J_{min}	J	L	N	N_1	G	S*
	in/mm														
SNL 508-607	3 3/8	2 3/8	3 13/16	5 3/4	4 1/4	2.362	1	6 7/8	6 1/2	6 11/16	8 1/8	3/4	5/8	1/2	*
	85	60	97	145	108	60	25	175	165	170	205	20	15	12	*
SNL 509	3 3/8	2 3/8	3 13/16	5 15/16	4 5/16	2.362	1	6 7/8	6 1/2	6 11/16	8 1/8	3/4	5/8	1/2	*
	85	60	97	150	109	60	25	175	165	170	205	20	15	12	*
SNL 510-608	3 9/16	2 3/8	4	5 15/16	4 1/2	2.362	1	6 7/8	6 1/2	6 11/16	8 1/8	3/4	5/8	1/2	*
	90	60	102	150	113	60	25	175	165	170	205	20	15	12	*
SNL 511-609	3 3/4	2 3/4	4 1/4	6 1/8	5	2.756	1 1/8	8 7/16	8 1/16	8 5/16	10 1/16	1	3/4	5/8	*
	95	70	107	155	128	70	28	215	205	210	255	24	18	16	*

***NOTE:** Dimension "S" indicates the shaft length from the centre of the bearing to the end of the shaft for housings with one end closed. For tabulation of the dimension "S", see the bearing tables on pages 52 and 53.

For an example on how to order, please see page 57.

Series SNL 500 and SNL 600 Pillow blocks of cast iron for bearing with adapter sleeve, grease or oil lubrication d_a 1 11/16 - 1 3/4 in (40 mm)

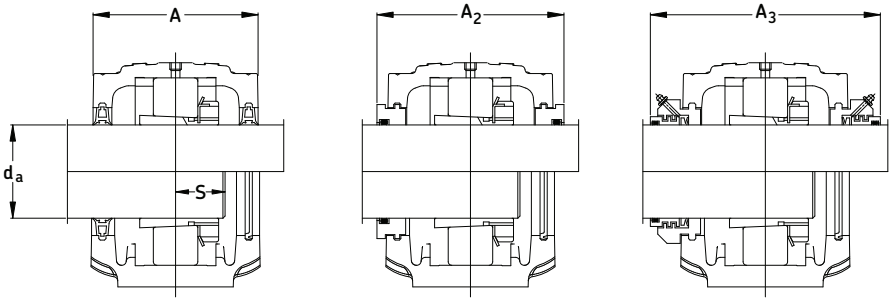

Double-lip seals
G & L design

Labyrinth seals
S design

Taconite seals
ND design

Shaft Dia. d_a	Complete Pillow Block Assembly	Housing	Standard Seal Package	Bearing	Adapter Sleeve	Fixing Rings	Qty.	Mass Complete		End Cover
mm in								lb.	kg.	
40	SNL 1509/40 TL	SNL 509	TSN 509L	1209 EK	H 209	FRB 5.5/85	2	7.91	3.59	ASNH 509
	SNL 1609/40 TG	SNL 511-609	TSN 609G	1309 EK	H 309	FRB 9.5/100	2	12.3	5.59	ASNH 511-609
	SNL 2509/40 TL	SNL 509	TSN 509L	2209 EK	H 309	FRB 3.5/85	2	8.18	3.71	ASNH 509
	SNL 2609/40 TG	SNL 511-609	TSN 609G	2309 EK	H 309	FRB 4/100	2	13.0	5.88	ASNH 511-609
	SNL 21609/40 TG	SNL 511-609	TSN 609G	21309 EK	H 309	FRB 9.5/100	2	12.3	5.59	ASNH 511-609
	SNL 22509/40 TL	SNL 509	TSN 509L	22209 EK	H 309	FRB 3.5/85	2	8.16	3.70	ASNH 509
	SNL 22609/40 TG	SNL 511-609	TSN 609G	22309 EK	H 2309	FRB 4/100	2	13.3	6.03	ASNH 511-609
	SNL C2509/40 TL	SNL 509	TSN 509L	C2209 K*	H 309E	FRB 3.5/85	2	8.16	3.70	ASNH 509
1 11/16	SNL 1510/1 11/16 TGA	SNL 510-608	TSN 510GA	1210 EK	HA 210	FRB 10.5/90	2	8.80	3.99	ASNH 510-608
	SNL 1610/1 11/16 TGA	SNL 512-610	TSN 610GA	1310 EK	HA 310	FRB 10.5/110	2	14.6	6.60	ASNH 512-610
	SNL 2510/1 11/16 TGA	SNL 510-608	TSN 510GA	2210 EK	HA 310	FRB 9/90	2	8.95	3.71	ASNH 510-608
	SNL 2610/1 11/16 TGA	SNL 512-610	TSN 610GA	2310 K	HA 2310	FRB 4/110	2	15.6	7.06	ASNH 512-610
	SNL 21610/1 11/16 TGA	SNL 512-610	TSN 610GA	21310 EK	HA 310	FRB 10.5/110	2	14.6	6.60	ASNH 512-610
	SNL 22510/1 11/16 TGA	SNL 510-608	TSN 510GA	22210 EK	HA 310	FRB 9/90	2	9.02	4.09	ASNH 510-608
	SNL 22610/1 11/16 TGA	SNL 512-610	TSN 610GA	22310 EK	HA 2310	FRB 4/110	2	16.0	7.26	ASNH 512-610
	SNL C2510/1 11/16 TGA	SNL 510-608	TSN 510GA	C2210 K*	HA 310E	FRB 9/90	2	9.02	4.09	ASNH 510-608
1 3/4	SNL 1510/1 3/4 TG	SNL 510-608	TSN 510G	1210 EK	HE 210	FRB 10.5/90	2	8.80	3.99	ASNH 510-608
	SNL 1610/1 3/4 TG	SNL 512-610	TSN 610G	1310 EK	HE 310	FRB 10.5/110	2	14.6	6.60	ASNH 512-610
	SNL 2510/1 3/4 TG	SNL 510-608	TSN 510G	2210 EK	HE 310	FRB 9/90	2	8.95	3.71	ASNH 510-608
	SNL 2610/1 3/4 TG	SNL 512-610	TSN 610G	2310 K	HE 2310	FRB 4/110	2	15.6	7.06	ASNH 512-610
	SNL 21610/1 3/4 TG	SNL 512-610	TSN 610G	21310 EK	HE 310	FRB 10.5/110	2	14.6	6.60	ASNH 512-610
	SNL 22510/1 3/4 TG	SNL 510-608	TSN 510G	22210 EK	HE 310	FRB 9/90	2	9.02	4.09	ASNH 510-608
	SNL 22610/1 3/4 TG	SNL 512-610	TSN 610G	22310 EK	HE 2310	FRB 4/110	2	16.0	7.26	ASNH 512-610
	SNL C2510/1 3/4 TG	SNL 510-608	TSN 510G	C2210 K*	HE 310E	FRB 9/90	2	9.02	4.09	ASNH 510-608

* Must always be located.

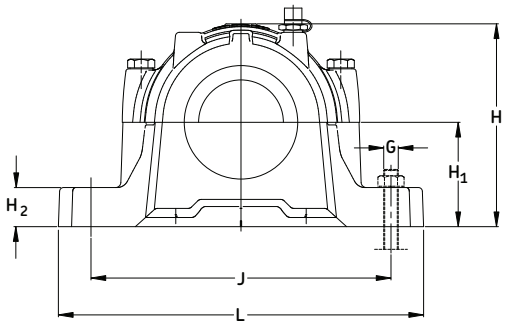

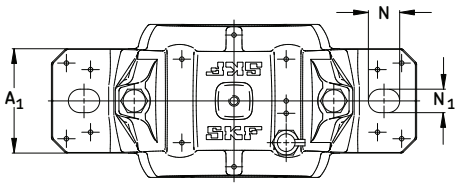

Housing No.	Dimensions													Bolts (2 req'd)	
	A	A_1	A_2	A_3	H	H_1	H_2	J_{max}	J_{min}	J	L	N	N_1	G	S*
	in/mm														
SNL 509	3 3/8	2 3/8	3 13/16	5 15/16	4 5/16	2.362	1	6 7/8	6 1/2	6 11/16	8 1/8	3/4	3/8	1/2	*
	85	60	97	150	109	60	25	175	165	170	205	20	15	12	*
SNL 510-608	3 9/16	2 3/8	4	5 15/16	4 7/16	2.362	1	6 7/8	6 1/2	6 11/16	8 1/8	3/4	5/8	1/2	*
	90	60	102	150	113	60	25	175	165	170	205	20	15	12	*
SNL 511-609	3 3/4	2 3/4	4 1/4	6 1/8	5	2.756	1 1/8	8 7/16	8 1/16	8 5/16	10 1/16	1	3/4	5/8	*
	95	70	107	155	128	70	28	215	205	210	255	24	18	16	*
SNL 512-610	4 1/4	2 3/4	4 5/8	6 1/2	5 1/4	2.756	1 3/16	8 7/16	8 1/8	8 5/16	10 1/16	1	3/4	5/8	*
	105	70	117	165	133	70	30	215	205	210	255	24	18	16	*

***NOTE:** Dimension "S" indicates the shaft length from the centre of the bearing to the end of the shaft for housings with one end closed. For tabulation of the dimension "S", see the bearing tables on pages 52 and 53.

For an example on how to order, please see page 57.

Series SNL 500 and SNL 600 Pillow blocks of cast iron for bearing with adapter sleeve, grease or oil lubrication d_a 1 15/16 (45 - 50 mm)

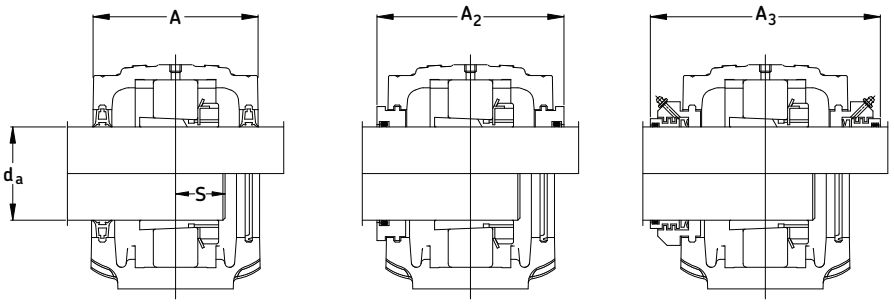

Double-lip seals
G & L design

Labyrinth seals
S design

Taconite seals
ND design

Shaft Dia. d_a	Complete Pillow Block Assembly	Housing	Standard Seal Package	Bearing	Adapter Sleeve	Fixing Rings	Qty.	Mass Complete		End Cover
mm in								lb.	kg.	
45	SNL 1510/45 TL	SNL 510-608	TSN 510L	1210 EK	H 210	FRB 10.5/90	2	8.80	3.99	ASNH 510-608
	SNL 1610/45 TG	SNL 512-610	TSN 610G	1310 EK	H 310	FRB 10.5/110	2	14.6	6.60	ASNH 512-610
	SNL 2510/45 TL	SNL 510-608	TSN 510L	2210 EK	H 310	FRB 9/90	2	8.95	3.71	ASNH 510-608
	SNL 2610/45 TG	SNL 512-610	TSN 610G	2310 K	H 2310	FRB 4/110	2	15.6	7.06	ASNH 512-610
	SNL 21610/45 TG	SNL 512-610	TSN 610G	21310 EK	H 310	FRB 10.5/110	2	14.6	6.60	ASNH 512-610
	SNL 22510/45 TL	SNL 510-608	TSN 510L	22210 EK	H 310	FRB 9/90	2	9.02	4.09	ASNH 510-608
	SNL 22610/45 TG	SNL 512-610	TSN 610G	22310 EK	H 2310	FRB 4/110	2	16.0	7.26	ASNH 512-610
	SNL C2510/45 TL	SNL 510-608	TSN 510L	C2210 K*	H 310E	FRB 9/90	2	9.02	4.09	ASNH 510-608
1 15/16	SNL 1511/1 15/16 TG	SNL 511-609	TSN 511G	1211 EK	HA 211	FRB 11.5/100	2	11.9	5.40	ASNH 511-609
	SNL 1611/1 15/16 TG	SNL 513-611	TSN 611G	1311 EK	HA 311	FRB 11/120	2	18.6	8.44	ASNH 513-611
	SNL 2511/1 15/16 TG	SNL 511-609	TSN 511G	2211 EK	HA 311	FRB 9.5/100	2	12.2	5.50	ASNH 511-609
	SNL 2611/1 15/16 TG	SNL 513-611	TSN 611G	2311 K	HA 2311	FRB 4/120	2	19.8	8.97	ASNH 513-611
	SNL 21611/1 15/16 TG	SNL 513-611	TSN 611G	21311 EK	HA 311	FRB 11/120	2	18.7	8.49	ASNH 513-611
	SNL 22511/1 15/16 TG	SNL 511-609	TSN 511G	22211 EK	HA 311	FRB 9.5/100	2	12.3	5.59	ASNH 511-609
	SNL 22611/1 15/16 TG	SNL 513-611	TSN 611G	22311 EK	HA 2311	FRB 4/120	2	20.3	9.22	ASNH 513-611
	SNL C2511/1 15/16 TG	SNL 511-609	TSN 511G	C2211 K*	HA 311E	FRB 9.5/100	2	12.3	5.59	ASNH 511-609
50	SNL 1511/50 TL	SNL 511-609	TSN 511L	1211 EK	H 211	FRB 11.5/100	2	11.9	5.40	ASNH 511-609
	SNL 1611/50 TG	SNL 513-611	TSN 611G	1311 EK	H 311	FRB 11/120	2	18.6	8.44	ASNH 513-611
	SNL 2511/50 TL	SNL 511-609	TSN 511L	2211 EK	H 311	FRB 9.5/100	2	12.2	5.50	ASNH 511-609
	SNL 2611/50 TG	SNL 513-611	TSN 611G	2311 K	H 2311	FRB 4/120	2	19.8	8.97	ASNH 513-611
	SNL 21611/50 TG	SNL 513-611	TSN 611G	21311 EK	H 311	FRB 11/120	2	18.7	8.49	ASNH 513-611
	SNL 22511/50 TL	SNL 511-609	TSN 511L	22211 EK	H 311	FRB 9.5/100	2	12.3	5.59	ASNH 511-609
	SNL 22611/50 TG	SNL 513-611	TSN 611G	22311 EK	H 2311	FRB 4/120	2	20.3	9.22	ASNH 513-611
	SNL C2511/50 TL	SNL 511-609	TSN 511L	C2211 K*	H 311E	FRB 9.5/100	2	12.3	5.59	ASNH 511-609

* Must always be located.

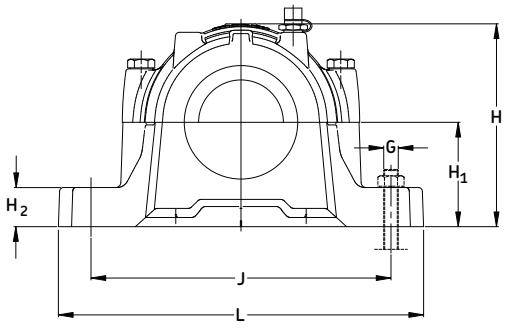

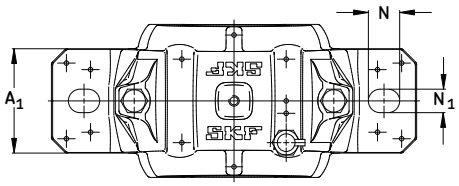

Housing No.	Dimensions													Bolts (2 req'd)	
	A	A_1	A_2	A_3	H	H_1	H_2	J_{max}	J_{min}	J	L	N	N_1	G	S*
	in/mm														
SNL 510-608	3 9/16	2 3/8	4	5 15/16	4 7/16	2.362	1	6 7/8	6 1/2	6 11/16	8 1/8	3/4	5/8	1/2	*
	90	60	102	150	113	60	25	175	165	170	205	20	15	12	*
SNL 511-609	3 3/4	2 3/4	4 1/4	6 1/8	5	2.756	1 1/8	8 7/16	8 1/8	8 5/16	10 1/16	1	3/4	5/8	*
	95	70	107	155	128	70	28	215	205	210	255	24	18	16	*
SNL 512-610	4 1/4	2 3/4	4 5/8	6 1/2	5 1/4	2.756	1 3/16	8 7/16	8 1/8	8 5/16	10 1/16	1	3/4	5/8	*
	105	70	117	165	133	70	30	215	205	210	255	24	18	16	*
SNL 513-611	4 3/8	3 1/8	4 13/16	6 11/16	5 7/8	3.150	1 3/16	9 1/4	8 7/8	9 1/8	10 13/16	1	3/4	5/8	*
	110	80	122	170	148	80	30	236	224	230	275	24	18	16	*

***NOTE:** Dimension "S" indicates the shaft length from the centre of the bearing to the end of the shaft for housings with one end closed. For tabulation of the dimension "S", see the bearing tables on pages 52 and 53.

For an example on how to order, please see page 57.

Series SNL 500 and SNL 600 Pillow blocks of cast iron for bearing with adapter sleeve, grease or oil lubrication d_a 2 - 2 3/16 in (55 mm)

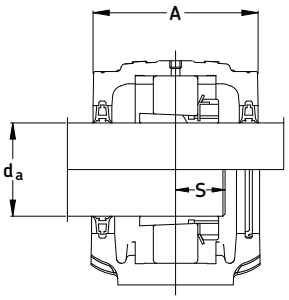

Double-lip seals
G & L design

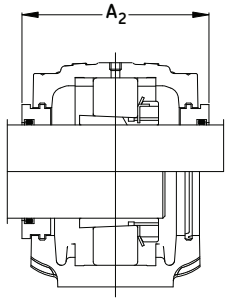

Labyrinth seals
S design

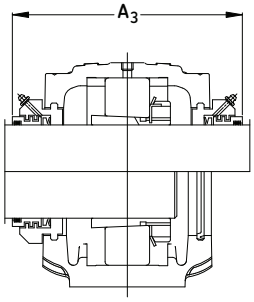

Taconite seals
ND design

Shaft Dia. d_a	Complete Pillow Block Assembly	Housing	Standard Seal Package	Bearing	Adapter Sleeve	Fixing Rings	Qty.	Mass Complete		End Cover
mm in								lb.	kg.	
2	SNL 1511/2 TG	SNL 511-609	TSN 511G	1211 EK	HE 211B	FRB 11.5/100	2	11.9	5.40	ASNH 511-609
	SNL 1611/2 TG	SNL 513-611	TSN 611G	1311 EK	HE 311B	FRB 11/120	2	18.6	8.44	ASNH 513-611
	SNL 2511/2 TG	SNL 511-609	TSN 511G	2211 EK	HE 311B	FRB 9.5/100	2	12.2	5.50	ASNH 511-609
	SNL 2611/2 TG	SNL 513-611	TSN 611G	2311 K	HE 2311	FRB 4/120	2	19.8	8.97	ASNH 513-611
	SNL 21611/2 TG	SNL 513-611	TSN 611G	21311 EK	HE 311B	FRB 11/120	2	18.7	8.49	ASNH 513-611
	SNL 22511/2 TG	SNL 511-609	TSN 511G	22211 EK	HE 311B	FRB 9.5/100	2	12.3	5.59	ASNH 511-609
	SNL 22611/2 TG	SNL 513-611	TSN 611G	22311 EK	HE 2311	FRB 4/120	2	20.3	9.22	ASNH 513-611
	SNL C2511/2 TG	SNL 511-609	TSN 511G	C2211 K*	HE 311BE	FRB 9.5/100	2	12.3	5.59	ASNH 511-609
55	SNL 1512/55 TL	SNL 512-610	TSN 512L	1212 EK	H 212	FRB 13/110	2	14.0	6.34	ASNH 512-610
	SNL 1612/55 TG	SNL 515-612	TSN 612G	1312 EK	H 312	FRB 12.5/130	2	20.6	9.34	ASNH 515-612
	SNL 2512/55 TL	SNL 512-610	TSN 512L	2212 EK	H 312	FRB 10/110	2	14.4	6.54	ASNH 512-610
	SNL 2612/55 TG	SNL 515-612	TSN 612G	2312 K	H 2312	FRB 5/130	2	22.0	10.0	ASNH 515-612
	SNL 21612/55 TG	SNL 515-612	TSN 612G	21312 EK	H 312	FRB 12.5/130	2	20.5	9.29	ASNH 515-612
	SNL 22512/55 TL	SNL 512-610	TSN 512L	22212 EK	H 312	FRB 10/110	2	14.5	6.59	ASNH 512-610
	SNL 22612/55 TG	SNL 515-612	TSN 612G	22312 EK	H 2312	FRB 5/130	2	22.7	10.3	ASNH 515-612
	SNL C2512/55 TL	SNL 512-610	TSN 512L	C2212 K*	H 312E	FRB 10/110	2	14.5	6.59	ASNH 512-610
2 3/16	SNL 1513/2 3/16 TGA	SNL 513-611	TSN 513GA	1213 EK	HA 213	FRB 14/120	2	17.2	7.80	ASNH 513-611
	SNL 1613/2 3/16 TGA	SNL 516-613	TSN 613GA	1313 EK	HA 313	FRB 12.5/140	2	27.3	12.4	ASNH 516-613
	SNL 2513/2 3/16 TGA	SNL 513-611	TSN 513GA	2213 EK	HA 313	FRB 10/120	2	17.9	8.10	ASNH 513-611
	SNL 2613/2 3/16 TGA	SNL 516-613	TSN 613GA	2313 K	HA 2313	FRB 5/140	2	29.1	13.2	ASNH 516-613
	SNL 21613/2 3/16 TGA	SNL 516-613	TSN 613GA	21313 EK	HA 313	FRB 12.5/140	2	27.3	12.4	ASNH 516-613
	SNL 22513/2 3/16 TGA	SNL 513-611	TSN 513GA	22213 EK	HA 313	FRB 10/120	2	18.0	8.16	ASNH 513-611
	SNL 22613/2 3/16 TGA	SNL 516-613	TSN 613GA	22313 EK	HA 2313	FRB 5/140	2	29.8	13.5	ASNH 516-613
	SNL C2513/2 3/16 TGA	SNL 513-611	TSN 513GA	C2213 K*	HA 313E	FRB 10/120	2	18.0	8.16	ASNH 513-611

* Must always be located.

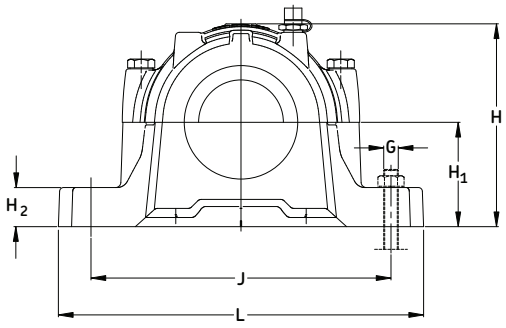

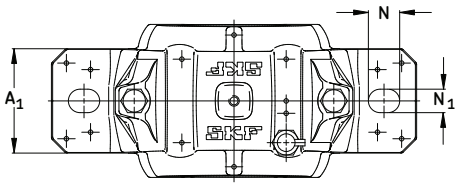

Housing No.	Dimensions													Bolts (2 req'd)	
	A	A_1	A_2	A_3	H	H_1	H_2	J_{max}	J_{min}	J	L	N	N_1	G	S*
	in/mm														
SNL 511-609	253 3/4	2 3/4	4 1/4	6 1/8	5	2.756	1 1/8	8 7/16	8 1/8	8 5/16	10 1/16	1	3/4	5/8	*
	95	70	107	155	128	70	28	215	205	210	255	24	18	16	*
SNL 512-610	4 1/4	2 3/4	4 5/8	6 1/2	5 1/4	2.756	1 3/16	8 7/16	8 1/8	8 5/16	10 1/16	1	3/4	5/8	*
	105	70	117	165	133	70	30	215	205	210	255	24	18	16	*
SNL 513-611	4 3/8	3 1/8	4 13/16	6 11/16	5 7/8	3.150	1 3/16	9 1/4	8 7/8	9 1/8	10 13/16	1	3/4	5/8	*
	110	80	122	170	148	80	30	236	224	230	275	24	18	16	*
SNL 515-612	4 5/8	3 1/8	5	6 7/8	6 1/8	3.150	1 3/16	9 3/8	8 3/4	9 1/8	11	1	3/4	5/8	*
	115	80	127	175	154	80	30	238	222	230	280	24	18	16	*
SNL 516-613	4 3/4	3 5/8	5 7/16	7 1/8	6 15/16	3.740	1 1/4	10 1/2	9 15/16	10 1/4	12 7/16	1 1/8	7/8	3/4	*
	120	90	138	180	175	95	32	268	252	260	315	28	22	20	*

***NOTE:** Dimension "S" indicates the shaft length from the centre of the bearing to the end of the shaft for housings with one end closed. For tabulation of the dimension "S", see the bearing tables on pages 52 and 53.

For an example on how to order, please see page 57.

Series SNL 500 and SNL 600 Pillow blocks of cast iron for bearing with adapter sleeve, grease or oil lubrication d_a 2 1/4 - 2 7/16 in (60 mm)

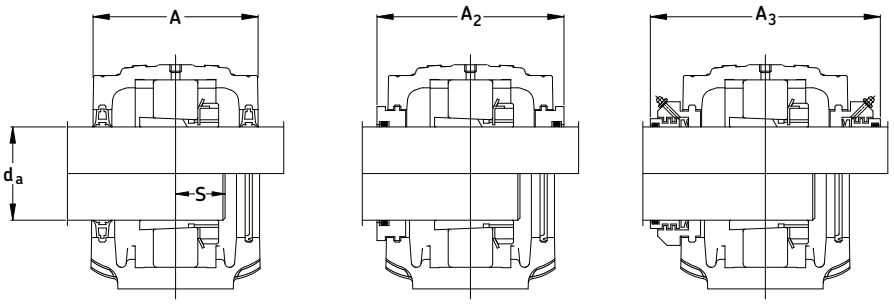

Double-lip seals
G & L design

Labyrinth seals
S design

Taconite seals
ND design

Shaft Dia. d_a	Complete Pillow Block Assembly	Housing	Standard Seal Package	Bearing	Adapter Sleeve	Fixing Rings	Qty.	Mass Complete		End Cover
mm in								lb.	kg.	
2 1/4	SNL 1513/2 1/4 TGE	SNL 513-611	TSN 513GE	1213 EK	HE 213	FRB 14/120	2	17.7	8.05	ASNH 513-611
	SNL 1613/2 1/4 TGE	SNL 516-613	TSN 613GE	1313 EK	HE 313	FRB 12.5/140	2	27.3	12.4	ASNH 516-613
	SNL 2513/2 1/4 TGE	SNL 513-611	TSN 513GE	2213 EK	HE 313	FRB 10/120	2	18.4	8.35	ASNH 513-611
	SNL 2613/2 1/4 TGE	SNL 516-613	TSN 613GE	2313 K	HE 2313	FRB 5/140	2	29.1	13.2	ASNH 516-613
	SNL 21613/2 1/4 TGE	SNL 516-613	TSN 613GE	21313 EK	HE 313	FRB 12.5/140	2	27.3	12.4	ASNH 516-613
	SNL 22513/2 1/4 TGE	SNL 513-611	TSN 513GE	22213 EK	HE 313	FRB 10/120	2	18.5	8.41	ASNH 513-611
	SNL 22613/2 1/4 TGE	SNL 516-613	TSN 613GE	22313 EK	HE 2313	FRB 5/140	2	29.7	13.5	ASNH 516-613
	SNL C2513/2 1/4 TGE	SNL 513-611	TSN 513GE	C2213 K*	HE 313E	FRB 10/120	2	18.5	8.41	ASNH 513-611
60	SNL 1513/60 TL	SNL 513-611	TSN 513L	1213 EK	H 213	FRB 14/120	2	17.7	8.05	ASNH 513-611
	SNL 1613/60 TG	SNL 516-613	TSN 613G	1313 EK	H 313	FRB 12.5/140	2	27.3	12.4	ASNH 516-613
	SNL 2513/60 TL	SNL 513-611	TSN 513L	2213 EK	H 313	FRB 10/120	2	18.4	8.35	ASNH 513-611
	SNL 2613/60 TG	SNL 516-613	TSN 613G	2313 K	H 2313	FRB 5/140	2	29.1	13.2	ASNH 516-613
	SNL 21613/60 TG	SNL 516-613	TSN 613G	21313 EK	H 313	FRB 12.5/140	2	27.3	12.4	ASNH 516-613
	SNL 22513/60 TL	SNL 513-611	TSN 513L	22213 EK	H 313	FRB 10/120	2	18.5	8.41	ASNH 513-611
	SNL 22613/60 TG	SNL 516-613	TSN 613G	22313 EK	H 2313	FRB 5/140	2	29.7	13.5	ASNH 516-613
	SNL C2513/60 TL	SNL 513-611	TSN 513L	C2213 K*	H 313E	FRB 10/120	2	18.5	8.41	ASNH 513-611
2 7/16	SNL 1515/2 7/16 TGA	SNL 515-612	TSN 515GA	1215 K	HA 215	FRB 15.5/130	2	20.0	9.06	ASNH 515-612
	SNL 1615/2 7/16 TGA	SNL 518-615	TSN 615GA	1315 K	HA 315	FRB 14/160	2	37.1	16.8	ASNH 518-615
	SNL 2515/2 7/16 TGA	SNL 515-612	TSN 515GA	2215 EK	HA 315	FRB 12.5/130	2	20.5	9.31	ASNH 515-612
	SNL 2615/2 7/16 TGA	SNL 518-615	TSN 615GA	2315 K	HA 2315	FRB 5/160	2	40.0	18.2	ASNH 518-615
	SNL 21615/2 7/16 TGA	SNL 518-615	TSN 615GA	21315 EK	HA 315	FRB 14/160	2	37.1	16.8	ASNH 518-615
	SNL 22515/2 7/16 TGA	SNL 515-612	TSN 515GA	22215 EK	HA 315	FRB 12.5/130	2	20.8	9.43	ASNH 515-612
	SNL 22615/2 7/16 TGA	SNL 518-615	TSN 615GA	22315 EK	HA 2315	FRB 5/160	2	41.2	18.7	ASNH 518-615
	SNL C2515/2 7/16 TGA	SNL 515-612	TSN 515GA	C2215 K*	HA 315E	FRB 12.5/130	2	20.8	9.43	ASNH 515-612
	SNL C2615/2 7/16 TGA	SNL 518-615	TSN 615GA	C2315 K*	HA 2315	FRB 5/160	2	41.2	18.7	ASNH 518-615

* Must always be located.

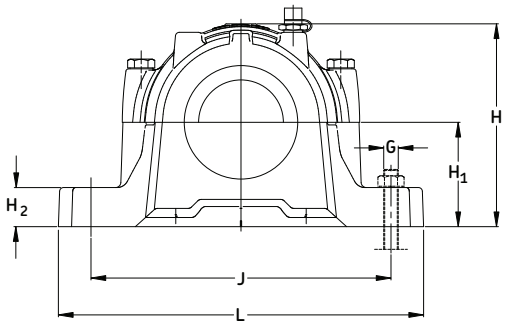

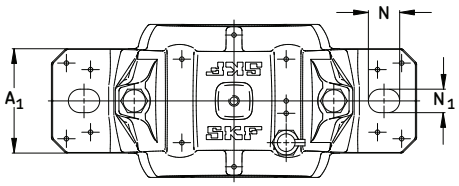

Housing No.	Dimensions													Bolts (2 req'd)	
	A	A_1	A_2	A_3	H	H_1	H_2	J_{max}	J_{min}	J	L	N	N_1	G	S*
	in/mm														
SNL 513-611	4 3/8	3 1/8	4 13/16	6 11/16	5 7/8	3.150	1 3/16	9 1/4	8 7/8	9 1/8	10 13/16	1	3/4	5/8	*
	110	80	122	170	148	80	30	236	224	230	275	24	18	16	*
SNL 515-612	4 5/8	3 1/8	5	6 7/8	6 1/8	3.150	1 3/16	9 3/8	8 3/4	9 1/8	11	1	3/4	5/8	*
	115	80	127	175	154	80	30	238	222	230	280	24	18	16	*
SNL 516-613	4 3/4	3 5/8	5 7/16	7 1/8	6 15/16	3.740	1 1/4	10 1/2	9 15/16	10 1/4	12 7/16	1 1/8	7/8	3/4	*
	120	90	138	180	175	95	32	268	252	260	315	28	22	20	*
SNL 518-615	5 1/2	3 15/16	6 1/4	8 7/8	7 5/8	3.937	1 3/8	11 5/8	11 1/4	11 7/16	13 5/8	1 1/8	7/8	3/4	*
	140	100	158	225	193	100	35	295	285	290	345	28	22	20	*

***NOTE:** Dimension "S" indicates the shaft length from the centre of the bearing to the end of the shaft for housings with one end closed. For tabulation of the dimension "S", see the bearing tables on pages 52 and 53.

For an example on how to order, please see page 57.

Series SNL 500 and SNL 600 Pillow blocks of cast iron for bearing with adapter sleeve, grease or oil lubrication d_a 2 ½ - 2 11/16 in (65 mm)

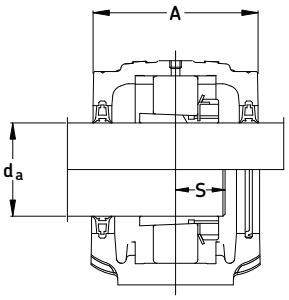

Double-lip seals
G & L design

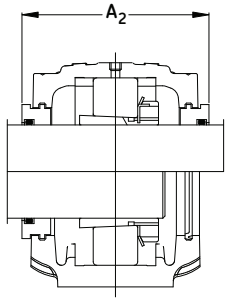

Labyrinth seals
S design

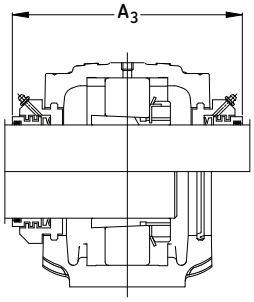

Taconite seals
ND design

Shaft Dia. d_a	Complete Pillow Block Assembly	Housing	Standard Seal Package	Bearing	Adapter Sleeve	Fixing Rings	Qty.	Mass Complete		End Cover
mm in								lb.	kg.	
2 ½	SNL 1515/2 ½ TGE	SNL 515-612	TSN 515GE	1215 K	HE 215	FRB 15.5/130	2	20.0	9.06	ASNH 515-612
	SNL 1615/2 ½ TGE	SNL 518-615	TSN 615GE	1315 K	HE 315	FRB 14/160	2	37.1	16.8	ASNH 518-615
	SNL 2515/2 ½ TGE	SNL 515-612	TSN 515GE	2215 EK	HE 315	FRB 12.5/130	2	20.5	9.31	ASNH 515-612
	SNL 2615/2 ½ TGE	SNL 518-615	TSN 615GE	2315 K	HE 2315	FRB 5/160	2	40.0	18.2	ASNH 518-615
	SNL 21615/2 ½ TGE	SNL 518-615	TSN 615GE	21315 EK	HE 315	FRB 14/160	2	37.1	16.8	ASNH 518-615
	SNL 22515/2 ½ TGE	SNL 515-612	TSN 515GE	22215 EK	HE 315	FRB 12.5/130	2	20.8	9.43	ASNH 515-612
	SNL 22615/2 ½ TGE	SNL 518-615	TSN 615GE	22315 EK	HE 2315	FRB 5/160	2	41.2	18.7	ASNH 518-615
	SNL C2515/2 ½ TGE	SNL 515-612	TSN 515GE	C2215 K*	HE 315E	FRB 12.5/130	2	20.8	9.43	ASNH 515-612
	SNL C2615/2 ½ TGE	SNL 518-615	TSN 615GE	C2315 K*	HE 2315	FRB 5/160	2	41.2	18.7	ASNH 518-615
65	SNL 1515/65 TL	SNL 515-612	TSN 515L	1215 K	H 215	FRB 15.5/130	2	20.0	9.06	ASNH 515-612
	SNL 1615/65 TG	SNL 518-615	TSN 615G	1315 K	H 315	FRB 14/160	2	37.1	16.8	ASNH 518-615
	SNL 2515/65 TL	SNL 515-612	TSN 515L	2215 EK	H 315	FRB 12.5/130	2	20.5	9.31	ASNH 515-612
	SNL 2615/65 TG	SNL 518-615	TSN 615G	2315 K	H 2315	FRB 5/160	2	40.0	18.2	ASNH 518-615
	SNL 21615/65 TG	SNL 518-615	TSN 615G	21315 EK	H 315	FRB 14/160	2	37.1	16.8	ASNH 518-615
	SNL 22515/65 TL	SNL 515-612	TSN 515L	22215 EK	H 315	FRB 12.5/130	2	20.8	9.43	ASNH 515-612
	SNL 22615/65 G	SNL 518-615	TSN 615G	22315 EK	H 2315	FRB 5/160	2	41.2	18.7	ASNH 518-615
	SNL C2515/65 TL	SNL 515-612	TSN 515L	C2215 K*	H 315E	FRB 12.5/130	2	20.8	9.43	ASNH 515-612
	SNL C2615/65 TG	SNL 518-615	TSN 615G	C2315 K*	H 2315	FRB 5/160	2	41.2	18.7	ASNH 518-615
2 11/16	SNL 1516/2 11/16 TGA	SNL 516-613	TSN 516GA	1216 K	HA 216	FRB 16/140	2	26.5	12.0	ASNH 516-613
	SNL 1616/2 11/16 TGA	SNL 519-616	TSN 616GA	1316 K	HA 316	FRB 14.5/170	2	41.4	18.8	ASNH 519-616
	SNL 2516/2 11/16 TGA	SNL 516-613	TSN 516GA	2216 EK	HA 316	FRB 12.5/140	2	27.3	12.4	ASNH 516-613
	SNL 2616/2 11/16 TGA	SNL 519-616	TSN 616GA	2316 K	HA 2316	FRB 5/170	2	46.3	21.0	ASNH 519-616
	SNL 21616/2 11/16 TGA	SNL 519-616	TSN 616GA	21316 EK	HA 316	FRB 14.5/170	2	41.7	18.9	ASNH 519-616
	SNL 22516/2 11/16 TGA	SNL 516-613	TSN 516GA	22216 EK	HA 316	FRB 12.5/140	2	27.5	12.5	ASNH 516-613
	SNL 22616/2 11/16 TGA	SNL 519-616	TSN 616GA	22316 EK	HA 2316	FRB 5/170	2	46.5	21.1	ASNH 519-616
	SNL C2516/2 11/16 TGA	SNL 516-613	TSN 516GA	C2216 K*	HA 316E	FRB 12.5/140	2	27.5	12.5	ASNH 516-613
	SNL C2616/2 11/16 TGA	SNL 519-616	TSN 616GA	C2316 K*	HA 2316	FRB 5/170	2	46.5	21.1	ASNH 519-616

* Must always be located.

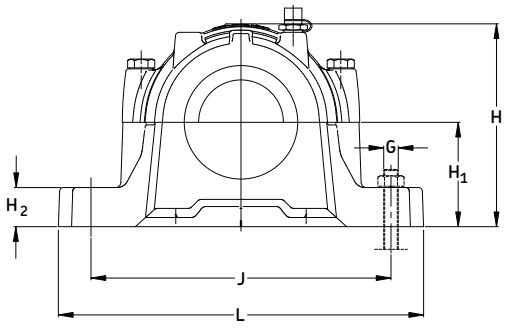

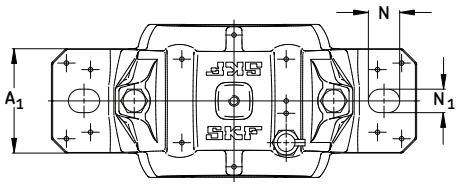

Housing No.	Dimensions													Bolts (2 req'd)	
	A	A_1	A_2	A_3	H	H_1	H_2	J_{max}	J_{min}	J	L	N	N_1	G	S*
	in/mm														
SNL 515-612	4 5/8	3 1/8	5	6 7/8	6 1/8	3.150	1 3/16	9 3/8	8 3/4	9 1/8	11	1	3/4	5/8	*
	115	80	127	175	154	80	30	238	222	230	280	24	18	16	*
SNL 516-613	4 3/4	3 5/8	5 7/16	7 1/8	6 15/16	3.740	1 1/4	10 1/2	9 15/16	10 1/4	12 7/16	1 1/8	7/8	3/4	*
	120	90	138	180	175	95	32	268	252	260	315	28	22	20	*
SNL 518-615	5 1/2	3 15/16	6 1/4	8 7/8	7 5/8	3.937	1 3/8	11 5/8	11 1/4	11 7/16	13 5/8	1 1/8	7/8	3/4	*
	140	100	158	225	193	100	35	295	285	290	345	28	22	20	*
SNL 519-616	5 3/4	3 15/16	6 7/16	8 11/16	8 5/16	4.409	1 3/8	11 5/8	11 1/4	11 7/16	13 5/8	1 1/8	7/8	3/4	*
	145	100	163	220	210	112	35	295	285	290	345	28	22	20	*

***NOTE:** Dimension "S" indicates the shaft length from the centre of the bearing to the end of the shaft for housings with one end closed. For tabulation of the dimension "S", see the bearing tables on pages 52 and 53.

For an example on how to order, please see page 57.

Series SNL 500 and SNL 600 Pillow blocks of cast iron for bearing with adapter sleeve, grease or oil lubrication d_a 2 3/4 - 2 15/16 in (70 mm)

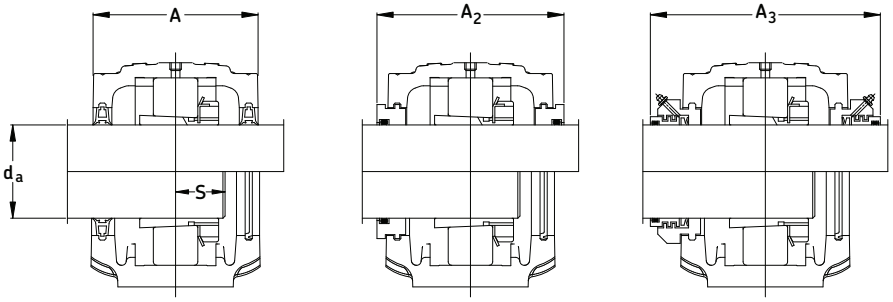

Double-lip seals
G & L design

Labyrinth seals
S design

Taconite seals
ND design

Shaft Dia. d_a	Complete Pillow Block Assembly	Housing	Standard Seal Package	Bearing	Adapter Sleeve	Fixing Rings	Qty.	Mass Complete		End Cover
mm in								lb.	kg.	
2 3/4	SNL 1516/2 3/4 TG	SNL 516-613	TSN 516G	1216 K	HE 216	FRB 16/140	2	26.5	12.0	ASNH 516-613
	SNL 1616/2 3/4 TG	SNL 519-616	TSN 616G	1316 K	HE 316	FRB 14.5/170	2	41.4	18.8	ASNH 519-616
	SNL 2516/2 3/4 TG	SNL 516-613	TSN 516G	2216 EK	HE 316	FRB 12.5/140	2	27.2	12.4	ASNH 516-613
	SNL 2616/2 3/4 TG	SNL 519-616	TSN 616G	2316 K	HE 2316	FRB 5/170	2	46.3	21.0	ASNH 519-616
	SNL 21616/2 3/4 TG	SNL 519-616	TSN 616G	21316 EK	HE 316	FRB 14.5/170	2	41.7	18.9	ASNH 519-616
	SNL 22516/2 3/4 TG	SNL 516-613	TSN 516G	22216 EK	HE 316	FRB 12.5/140	2	27.6	12.5	ASNH 516-613
	SNL 22616/2 3/4 TG	SNL 519-616	TSN 616G	22316 EK	HE 2316	FRB 5/170	2	46.5	21.1	ASNH 519-616
	SNL C2516/2 3/4 TG	SNL 516-613	TSN 516G	C2216 K*	HE 316E	FRB 12.5/140	2	27.6	12.5	ASNH 516-613
	SNL C2616/2 3/4 TG	SNL 519-616	TSN 616G	C2316 K*	HE 2316	FRB 5/170	2	46.5	21.1	ASNH 519-616
70	SNL 1516/70 TL	SNL 516-613	TSN 516L	1216 K	H 216	FRB 16/140	2	26.5	12.0	ASNH 516-613
	SNL 1616/70 TG	SNL 519-616	TSN 616G	1316 K	H 316	FRB 14.5/170	2	41.4	18.8	ASNH 519-616
	SNL 2516/70 TL	SNL 516-613	TSN 516L	2216 EK	H 316	FRB 12.5/140	2	27.2	12.4	ASNH 516-613
	SNL 2616/70 TG	SNL 519-616	TSN 616G	2316 K	H 2316	FRB 5/170	2	46.3	21.0	ASNH 519-616
	SNL 21616/70 TG	SNL 519-616	TSN 616G	21316 EK	H 316	FRB 14.5/170	2	41.7	18.9	ASNH 519-616
	SNL 22516/70 TL	SNL 516-613	TSN 516L	22216 EK	H 316	FRB 12.5/140	2	27.5	12.5	ASNH 516-613
	SNL 22616/70 TG	SNL 519-616	TSN 616G	22316 EK	H 2316	FRB 5/170	2	46.5	21.1	ASNH 519-616
	SNL C2516/70 TL	SNL 516-613	TSN 516L	C2216 K*	H 316E	FRB 12.5/140	2	27.5	12.5	ASNH 516-613
	SNL C2616/70 TG	SNL 519-616	TSN 616G	C2316 K*	H 2316	FRB 5/170	2	46.5	21.1	ASNH 519-616
2 15/16	SNL 1517/2 15/16 TG	SNL 517	TSN 517G	1217 K	HA 217	FRB 16.5/150	2	28.9	13.1	ASNH 517
	SNL 1617/2 15/16 TG	SNL 520-617	TSN 617G	1317 K	HA 317	FRB 14.5/180	2	51.8	23.5	ASNH 520-617
	SNL 2517/2 15/16 TG	SNL 517	TSN 517G	2217 K	HA 317	FRB 12.5/150	2	29.9	13.6	ASNH 517
	SNL 2617/2 15/16 TG	SNL 520-617	TSN 617G	2317 K	HA 2317	FRB 5/180	2	56.9	25.8	ASNH 520-617
	SNL 21617/2 15/16 TG	SNL 520-617	TSN 617G	21317 EK	HA 317	FRB 14.5/180	2	51.8	23.5	ASNH 520-617
	SNL 22517/2 15/16 TG	SNL 517	TSN 517G	22217 EK	HA 317	FRB 12.5/150	2	30.4	13.8	ASNH 517
	SNL 22617/2 15/16 TG	SNL 520-617	TSN 617G	22317 EK	HA 2317	FRB 5/180	2	57.3	26.0	ASNH 520-617
	SNL C2517/2 15/16 TG	SNL 517	TSN 517G	C2217 K*	HA 317E	FRB 12.5/150	2	30.4	13.8	ASNH 517
	SNL C2617/2 15/16 TG	SNL 520-617	TSN 617G	C2317 K*	HA 2317	FRB 5/180	2	57.3	26.0	ASNH 520-617

* Must always be located.

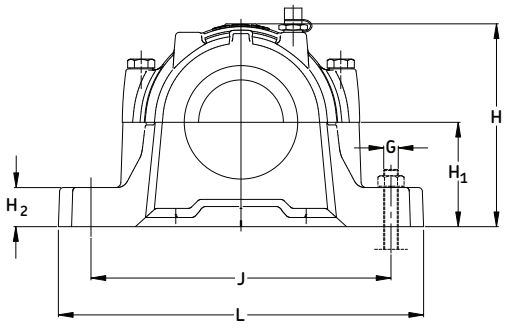

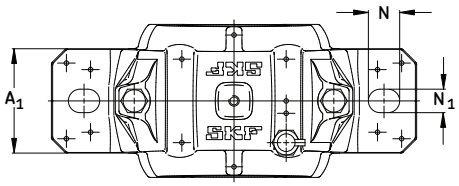

Housing No.	Dimensions													Bolts (2 req'd)	
	A	A_1	A_2	A_3	H	H_1	H_2	J_{max}	J_{min}	J	L	N	N_1	G	S*
	in/mm														
SNL 516-613	4 3/4	3 5/8	5 7/16	7 1/8	6 15/16	3.740	1 1/4	10 1/2	9 15/16	10 1/4	12 7/16	1 1/8	7/8	3/4	*
	120	90	138	180	175	95	32	268	252	260	315	28	22	20	*
SNL 517	4 15/16	3 5/8	5 5/8	8 5/16	7 1/4	3.740	1 1/4	10 1/2	9 15/16	10 1/4	12 5/8	1 1/8	7/8	3/4	*
	125	90	143	210	183	95	32	268	252	260	320	28	22	20	*
SNL 519-616	5 3/4	3 15/16	6 7/16	8 11/16	8 5/16	4.409	1 3/8	11 5/8	11 1/4	11 7/16	13 5/8	1 1/8	7/8	3/4	*
	145	100	163	220	210	112	35	295	285	290	345	28	22	20	*
SNL 520-617	6 5/16	4 5/16	7	9 1/4	8 9/16	4.409	1 9/16	12 13/16	12 3/8	12 5/8	15	1 1/4	1	7/8	*
	160	110	178	235	218	112	40	326	314	320	380	32	26	24	*

***NOTE:** Dimension "S" indicates the shaft length from the centre of the bearing to the end of the shaft for housings with one end closed. For tabulation of the dimension "S", see the bearing tables on pages 52 and 53.

For an example on how to order, please see page 57.

Series SNL 500 and SNL 600 Pillow blocks of cast iron for bearing with adapter sleeve, grease or oil lubrication d_a 3 in (75 - 80 mm)

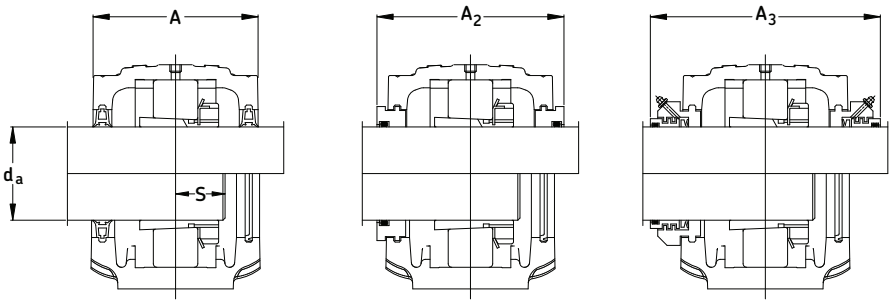

Double-lip seals
G & L design

Labyrinth seals
S design

Taconite seals
ND design

Shaft Dia. d_a	Complete Pillow Block Assembly	Housing	Standard Seal Package	Bearing	Adapter Sleeve	Fixing Rings	Qty.	Mass Complete		End Cover
mm in								lb.	kg.	
75	SNL 1517/75 TL	SNL 517	TSN 517L	1217 K	H 217	FRB 16.5/150	2	28.9	13.1	ASNH 517
	SNL 1617/75 TG	SNL 520-617	TSN 617G	1317 K	H 317	FRB 14.5/180	2	51.8	23.5	ASNH 520-617
	SNL 2517/75 TL	SNL 517	TSN 517L	2217 K	H 317	FRB 12.5/150	2	29.9	13.6	ASNH 517
	SNL 2617/75 TG	SNL 520-617	TSN 617G	2317 K	H 2317	FRB 5/180	2	56.9	25.8	ASNH 520-617
	SNL 21617/75 TG	SNL 520-617	TSN 617G	21317 EK	H 317	FRB 14.5/180	2	51.8	23.5	ASNH 520-617
	SNL 22517/75 TL	SNL 517	TSN 517L	22217 EK	H 317	FRB 12.5/150	2	30.4	13.8	ASNH 517
	SNL 22617/75 TG	SNL 520-617	TSN 617G	22317 EK	H 2317	FRB 5/180	2	57.3	26.0	ASNH 520-617
	SNL C2517/75 TL	SNL 517	TSN 517L	C2217 K*	H 317E	FRB 12.5/150	2	30.4	13.8	ASNH 517
	SNL C2617/75 TG	SNL 520-617	TSN 617G	C2317 K*	H 2317	FRB 5/180	2	57.3	26.0	ASNH 520-617
3	SNL 1517/3 TG	SNL 517	TSN 517G	1217 K	HE 217	FRB 16.5/150	2	28.9	13.1	ASNH 517
	SNL 1617/3 TG	SNL 520-617	TSN 617G	1317 K	HE 317	FRB 14.5/180	2	51.8	23.5	ASNH 520-617
	SNL 2517/3 TG	SNL 517	TSN 517G	2217 K	HE 317	FRB 12.5/150	2	29.9	13.6	ASNH 517
	SNL 2617/3 TG	SNL 520-617	TSN 617G	2317 K	HE 2317	FRB 5/180	2	56.9	25.8	ASNH 520-617
	SNL 21617/3 TG	SNL 520-617	TSN 617G	21317 EK	HE 317	FRB 14.5/180	2	51.8	23.5	ASNH 520-617
	SNL 22517/3 TG	SNL 517	TSN 517G	22217 EK	HE 317	FRB 12.5/150	2	30.4	13.8	ASNH 517
	SNL 22617/3 TG	SNL 520-617	TSN 617G	22317 EK	HE 2317	FRB 5/180	2	57.3	26.0	ASNH 520-617
	SNL C2517/3 TG	SNL 517	TSN 517G	C2217 K*	HE 317E	FRB 12.5/150	2	30.4	13.8	ASNH 517
	SNL C2617/3 TG	SNL 520-617	TSN 617G	C2317 K*	HE 2317	FRB 5/180	2	57.3	26.0	ASNH 520-617
80	SNL 1518/80 TL	SNL 518-615	TSN 518L	1218 K	H 218	FRB 17.5/160	2	35.7	16.2	ASNH 518-615
	SNL 2518/80 TL	SNL 518-615	TSN 518L	2218 K	H 318	FRB 12.5/160	2	36.2	16.4	ASNH 518-615
	SNL 22518/80 TL	SNL 518-615	TSN 518L	22218 EK	H 318	FRB 12.5/160	2	37.6	17.1	ASNH 518-615
	SNL 23518/80 TL	SNL 518-615	TSN 518L	23218CCK/W33	H 2318	FRB 6.25/160	2	41.0	18.6	ASNH 518-615
	SNL C2518/80 TL	SNL 518-615	TSN 518L	C2218 K *	H 318E	FRB 12.5/160	2	37.6	17.1	ASNH 518-615

* Must always be located.

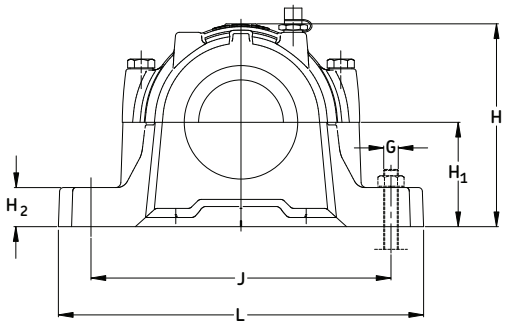

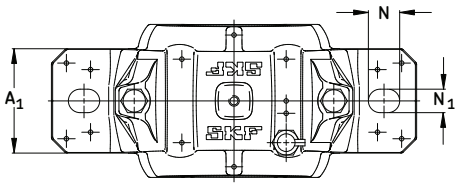

Housing No.	Dimensions													Bolts (2 req'd)	
	A	A_1	A_2	A_3	H	H_1	H_2	J_{max}	J_{min}	J	L	N	N_1	G	S*
	in/mm														
SNL 517	4 15/16	3 5/8	5 5/8	8 5/16	7 1/4	3.740	1 1/4	10 1/2	9 15/16	10 1/4	12 5/8	1 1/8	7/8	3/4	*
	125	90	143	210	183	95	32	268	252	260	320	28	22	20	*
SNL 518-615	5 1/2	3 15/16	6 1/4	8 7/8	7 5/8	3.937	1 3/8	11 5/8	11 1/4	11 7/16	13 5/8	1 1/8	7/8	3/4	*
	140	100	158	225	193	100	35	295	285	290	345	28	22	20	*
SNL 520-617	6 5/16	4 15/16	7	9 1/4	8 9/16	4.409	1 9/16	12 13/16	12 3/8	12 5/8	15	1 1/4	1	7/8	*
	160	110	178	235	218	112	40	326	314	320	380	32	26	24	*

***NOTE:** Dimension "S" indicates the shaft length from the centre of the bearing to the end of the shaft for housings with one end closed. For tabulation of the dimension "S", see the bearing tables on pages 52 and 53.

For an example on how to order, please see page 57.

Series SNL 500 and SNL 600 Pillow blocks of cast iron for bearing with adapter sleeve, grease or oil lubrication d_a 3 3/16 - 3 7/16 in (85 mm)

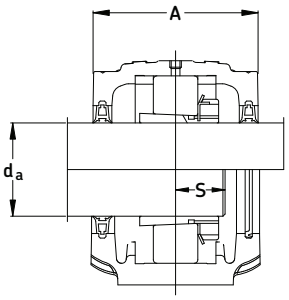

Double-lip seals
G & L design

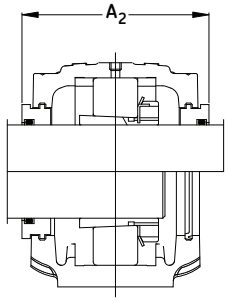

Labyrinth seals
S design

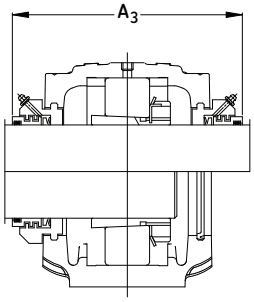

Taconite seals
ND design

Shaft Dia. d_a	Complete Pillow Block Assembly	Housing	Standard Seal Package	Bearing	Adapter Sleeve	Fixing Rings	Qty.	Mass Complete		End Cover
mm in								lb.	kg.	
3 3/16	SNL 1518/3 3/16 TG	SNL 518-615	TSN 518G	1218 K	HA 218	FRB 17.5/160	2	35.7	16.2	ASNH 518-615
	SNL 2518/3 3/16 TG	SNL 518-615	TSN 518G	2218 K	HA 318	FRB 12.5/160	2	36.2	16.4	ASNH 518-615
	SNL 22518/3 3/16 TG	SNL 518-615	TSN 518G	22218 EK	HA 318	FRB 12.5/160	2	37.6	17.1	ASNH 518-615
	SNL 23518/3 3/16 TG	SNL 518-615	TSN 518G	23218CCK/W33	HA 2318	FRB 6.25/160	2	41.0	18.6	ASNH 518-615
	SNL C2518/3 3/16 TG	SNL 518-615	TSN 518G	C2218 K *	HA 318E	FRB 12.5/160	2	37.6	17.1	ASNH 518-615
3 1/4	SNL 1518/3 1/4 TGE	SNL 518-615	TSN 518GE	1218 K	HE 218	FRB 17.5/160	2	35.7	16.2	ASNH 518-615
	SNL 2518/3 1/4 TGE	SNL 518-615	TSN 518GE	2218 K	HE 318	FRB 12.5/160	2	36.2	16.4	ASNH 518-615
	SNL 22518/3 1/4 TGE	SNL 518-615	TSN 518GE	22218 EK	HE 318	FRB 12.5/160	2	37.6	17.1	ASNH 518-615
	SNL 23518/3 1/4 TGE	SNL 518-615	TSN 518GE	23218CCK/W33	HE 2318	FRB 6.25/160	2	41.0	18.6	ASNH 518-615
	SNL C2518/3 1/4 TGE	SNL 518-615	TSN 518GE	C2218 K *	HE 318E	FRB 12.5/160	2	37.6	17.1	ASNH 518-615
85	SNL 1519/85 TL	SNL 519-616	TSN 519L	1219 K	H 219	FRB 18/170	2	39.9	18.1	ASNH 519-616
	SNL 1619/85 TG	SNL 522-619	TSN 619G	1319 K	H 319	FRB 17.5/200	2	70.0	32.0	ASNH 522-619
	SNL 2519/85 TL	SNL 519-616	TSN 519L	2219 K	H 319	FRB 12.5/170	2	42.1	19.1	ASNH 519-616
	SNL 2619/85 TG	SNL 522-619	TSN 619G	2319 K	H 2319	FRB 6.5/200	2	73.7	33.5	ASNH 522-619
	SNL 21619/85 TG	SNL 522-619	TSN 619G	21319 EK	H 2319	FRB 17.5/200	2	71.6	32.5	ASNH 522-619
	SNL 22519/85 TL	SNL 519-616	TSN 519L	22219 EK	H 319	FRB 12.5/170	2	42.1	19.1	ASNH 519-616
	SNL 22619/85 TG	SNL 522-619	TSN 619G	22319 EK	H 2319	FRB 6.5/200	2	74.3	33.7	ASNH 522-619
3 7/16	SNL 1520/3 7/16 TGA	SNL 520-617	TSN 520GA	1220 K	HA 220	FRB 18/180	2	49.8	22.6	ASNH 520-617
	SNL 1620/3 7/16 TGA	SNL 524-620	TSN 620GA	1320 K	HA 320	FRB 19.5/215	2	79.6	36.1	ASNH 524-620
	SNL 2520/3 7/16 TGA	SNL 520-617	TSN 520GA	2220 K	HA 320	FRB 12/180	2	52.5	23.8	ASNH 520-617
	SNL 2620/3 7/16 TGA	SNL 524-620	TSN 620GA	2320 K	HA 2320	FRB 6.5/215	2	89.0	40.4	ASNH 524-620
	SNL 21620/3 7/16 TGA	SNL 524-620	TSN 620GA	21320 EK	HA 320	FRB 19.5/215	2	80.7	36.6	ASNH 524-620
	SNL 22520/3 7/16 TGA	SNL 520-617	TSN 520GA	22220 EK	HA 320	FRB 12/180	2	52.7	23.9	ASNH 520-617
	SNL 22620/3 7/16 TGA	SNL 524-620	TSN 620GA	22320 EK	HA 2320	FRB 6.5/215	2	90.2	40.9	ASNH 524-620
	SNL 23520/3 7/16 TGA	SNL 520-617	TSN 520GA	23220CCK/W33	HA 2320	FRB 4.85/180	2	57.3	26.0	ASNH 520-617
	SNL C2520/3 7/16 TGA	SNL 520-617	TSN 520GA	C2220 K*	HA 320E	FRB 12/180	2	52.7	23.9	ASNH 520-617
	SNL C2620/3 7/16 TGA	SNL 524-620	TSN 620GA	C2320 K*	HA 2320	FRB 6.5/215	2	90.2	40.9	ASNH 524-620

* Must always be located.

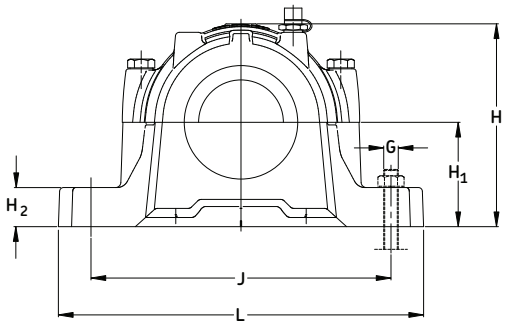

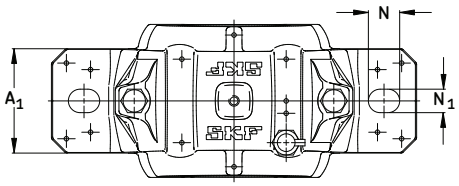

Housing No.	Dimensions													Bolts (2 req'd)	
	A	A_1	A_2	A_3	H	H_1	H_2	J_{max}	J_{min}	J	L	N	N_1	G	S*
	in/mm														
SNL 518-615	5 1/2	3 15/16	6 1/4	8 7/8	7 5/8	3.937	1 3/8	11 5/8	11 1/4	11 7/16	13 5/8	1 1/8	7/8	3/4	*
	140	100	158	225	193	100	35	295	285	290	345	28	22	20	*
SNL 519-616	5 3/4	3 15/16	6 7/16	8 11/16	8 5/16	4.409	1 3/8	11 5/8	11 1/4	11 7/16	13 5/8	1 1/8	7/8	3/4	*
	145	100	163	220	210	112	35	295	285	290	345	28	22	20	*
SNL 520-617	6 5/16	4 5/16	7	9 1/4	8 9/16	4.409	1 9/16	12 13/16	12 3/8	12 5/8	15	1 1/4	1	7/8	*
	160	110	178	235	218	112	40	326	314	320	380	32	26	24	*
SNL 522-619	6 15/16	4 3/4	7 9/16	9 7/8	9 1/2	4.921	1 3/4	14	13 9/16	13 11/16	16 1/8	1 1/4	1	7/8	*
	175	120	191	250	242	125	45	356	344	350	410	32	26	24	*
SNL 524-620	7 5/16	4 3/4	7 7/8	10 1/4	10 11/16	5.512	1 3/4	14	13 9/16	13 11/16	16 1/8	1 1/4	1	7/8	*
	185	120	199	260	271	140	45	356	344	350	410	32	26	24	*

***NOTE:** Dimension "S" indicates the shaft length from the centre of the bearing to the end of the shaft for housings with one end closed. For tabulation of the dimension "S", see the bearing tables on pages 52 and 53.

For an example on how to order, please see page 57.

Series SNL 500 and SNL 600 Pillow blocks of cast iron for bearing with adapter sleeve, grease or oil lubrication d_a 3 ½ in (90 - 100 mm)

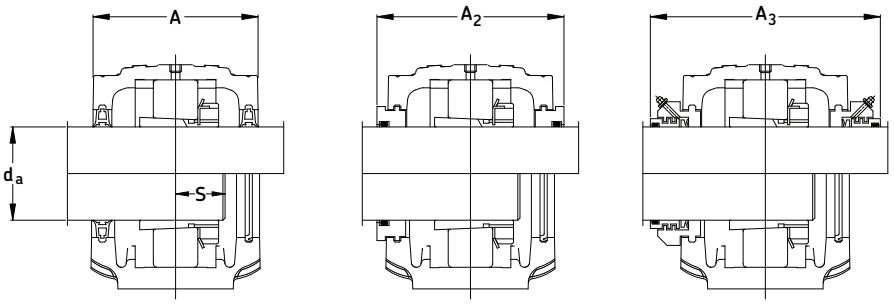

Double-lip seals
G & L design

Labyrinth seals
S design

Taconite seals
ND design

Shaft Dia. d_a	Complete Pillow Block Assembly	Housing	Standard Seal Package	Bearing	Adapter Sleeve	Fixing Rings	Qty.	Mass Complete		End Cover
mm in								lb.	kg.	
3 ½	SNL 1520/3 ½ TGE	SNL 520-617	TSN 520GE	1220 K	HE 220	FRB 18/180	2	49.8	22.6	ASNH 520-617
	SNL 1620/3 ½ TGE	SNL 524-620	TSN 620GE	1320 K	HE 320	FRB 19.5/215	2	79.6	36.1	ASNH 524-620
	SNL 2520/3 ½ TGE	SNL 520-617	TSN 520GE	2220 K	HE 320	FRB 12/180	2	52.5	23.8	ASNH 520-617
	SNL 2620/3 ½ TGE	SNL 524-620	TSN 620GE	2320 K	HE 2320	FRB 6.5/215	2	89.0	40.4	ASNH 524-620
	SNL 21620/3 ½ TGE	SNL 524-620	TSN 620GE	21320 EK	HE 320	FRB 19.5/215	2	80.7	36.6	ASNH 524-620
	SNL 22520/3 ½ TGE	SNL 520-617	TSN 520GE	22220 EK	HE 320	FRB 12/180	2	52.7	23.9	ASNH 520-617
	SNL 22620/3 ½ TGE	SNL 524-620	TSN 620GE	22320 EK	HE 2320	FRB 6.5/215	2	90.2	40.9	ASNH 524-620
	SNL 23520/3 ½ TGE	SNL 520-617	TSN 520GE	23220CCK/W33	HE 2320	FRB 4.85/180	2	57.3	26.0	ASNH 520-617
	SNL C2520/3 ½ TGE	SNL 520-617	TSN 520GE	C2220 K*	HE 320E	FRB 12/180	2	52.7	23.9	ASNH 520-617
	SNL C2620/3 ½ TGE	SNL 524-620	TSN 620GE	C2320 K*	HE 2320	FRB 6.5/215	2	90.2	40.9	ASNH 524-620
90	SNL 1520/90 TL	SNL 520-617	TSN 520L	1220 K	H 220	FRB 18/180	2	49.8	22.6	ASNH 520-617
	SNL 1620/90 TG	SNL 524-620	TSN 620G	1320 K	H 320	FRB 19.5/215	2	79.6	36.1	ASNH 524-620
	SNL 2520/90 TL	SNL 520-617	TSN 520L	2220 K	H 320	FRB 12/180	2	52.5	23.8	ASNH 520-617
	SNL 2620/90 TG	SNL 524-620	TSN 620G	2320 K	H 2320	FRB 6.5/215	2	89.0	40.4	ASNH 524-620
	SNL 21620/90 TG	SNL 524-620	TSN 620G	21320 EK	H 320	FRB 19.5/215	2	80.7	36.6	ASNH 524-620
	SNL 22520/90 TL	SNL 520-617	TSN 520L	22220 EK	H 320	FRB 12/180	2	52.7	23.9	ASNH 520-617
	SNL 22620/90 TG	SNL 524-620	TSN 620G	22320 EK	H 2320	FRB 6.5/215	2	90.2	40.9	ASNH 524-620
	SNL 23520/90 TL	SNL 520-617	TSN 520L	23220CCK/W33	H 2320	FRB 4.85/180	2	57.3	26.0	ASNH 520-617
	SNL C2520/90 TL	SNL 520-617	TSN 520L	C2220 K*	H 320E	FRB 12/180	2	52.7	23.9	ASNH 520-617
	SNL C2620/90 TG	SNL 524-620	TSN 620G	C2320 K*	H 2320	FRB 6.5/215	2	90.2	40.9	ASNH 524-620
100	SNL 1522/100 TL	SNL 522-619	TSN 522L	1222K	H 222	FRB 21/200	2	64.0	29.0	ASNH 522-619
	SNL 2522/100 TL	SNL 522-619	TSN 522L	2222 K	H 322	FRB 13.5/200	2	64.6	29.3	ASNH 522-619
	SNL 22522/100 TL	SNL 522-619	TSN 522L	22222 K	H 322	FRB 13.5/200	2	68.3	31.0	ASNH 522-619
	SNL 23522/100 TL	SNL 522-619	TSN 522L	23222CCK/W33	H 2322	FRB 5.1/200	2	75.4	34.2	ASNH 522-619
	SNL C2522/100 TL	SNL 522-619	TSN 522L	C2222 K*	H 322E	FRB 13.5/200	2	68.3	31.0	ASNH 522-619

* Must always be located.

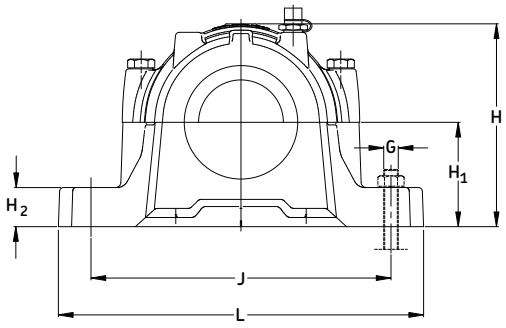

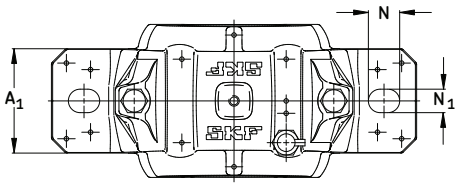

Housing No.	Dimensions													Bolts (2 req'd)	
	A	A_1	A_2	A_3	H	H_1	H_2	J_{max}	J_{min}	J	L	N	N_1	G	S*
	in/mm														
SNL 520-617	6 5/16	4 5/16	7	9 1/4	8 9/16	4.409	1 9/16	12 13/16	12 3/8	12 5/8	15	1 1/4	1	7/8	*
	160	110	178	235	218	112	40	326	314	320	380	32	26	24	*
SNL 522-619	6 15/16	4 3/4	7 9/16	9 7/8	9 1/2	4.921	1 3/4	14	13 9/16	13 11/16	16 1/8	1 1/4	1	7/8	*
	175	120	191	250	242	125	45	356	344	350	410	32	26	24	*
SNL 524-620	7 5/16	4 3/4	7 7/8	10 1/4	10 11/16	5.512	1 3/4	14	13 9/16	13 11/16	16 1/8	1 1/4	1	7/8	*
	185	120	199	260	271	140	45	356	344	350	410	32	26	24	*

***NOTE:** Dimension "S" indicates the shaft length from the centre of the bearing to the end of the shaft for housings with one end closed. For tabulation of the dimension "S", see the bearing tables on pages 52 and 53.

For an example on how to order, please see page 57.

Series SNL 500 and SNL 600 Pillow blocks of cast iron for bearing with adapter sleeve, grease or oil lubrication d_a 3 15/16 - 4 1/4 in (110 mm)

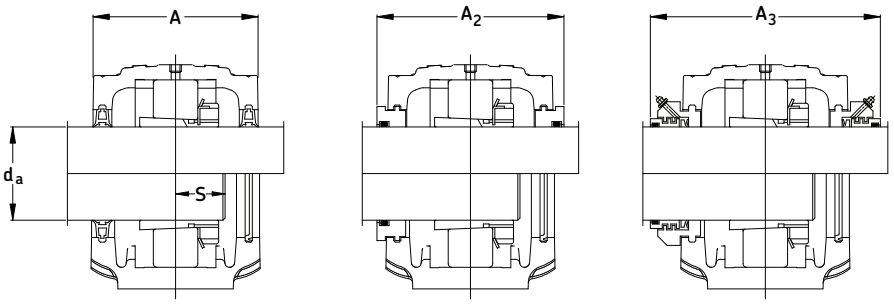

Double-lip seals
G & L design

Labyrinth seals
S design

Taconite seals
ND design

Shaft Dia. d_a	Complete Pillow Block Assembly	Housing	Standard Seal Package	Bearing	Adapter Sleeve	Fixing Rings	Qty.	Mass Complete		End Cover
mm in								lb.	kg.	
3 15/16	SNL 1522/3 15/16 TL	SNL 522-619	TSN 522L	1222 K	H 222	FRB 21/200	2	64.0	29.0	ASNH 522-619
	SNL 2522/3 15/16 TL	SNL 522-619	TSN 522L	2222 K	H 322	FRB 13.5/200	2	64.6	29.3	ASNH 522-619
	SNL 22522/3 15/16 TL	SNL 522-619	TSN 522L	22222 EK	H 322	FRB 13.5/200	2	68.3	31.0	ASNH 522-619
	SNL 23522/3 15/16 TL	SNL 522-619	TSN 522L	23222CCK/W33	H 2322	FRB 5.1/200	2	75.4	34.2	ASNH 522-619
	SNL C2522/3 15/16 TL	SNL 522-619	TSN 522L	C2222 K*	H 322E	FRB 13.5/200	2	68.3	31.0	ASNH 522-619
4	SNL 1522/4 TL	SNL 522-619	TSN 522L	1222 K	HE 222	FRB 21/200	2	64.0	29.0	ASNH 522-619
	SNL 2522/4 TL	SNL 522-619	TSN 522L	2222 K	HE 322	FRB 13.5/200	2	64.6	29.3	ASNH 522-619
	SNL 22522/4 TL	SNL 522-619	TSN 522L	22222 EK	HE 322	FRB 13.5/200	2	68.3	31.0	ASNH 522-619
	SNL 23522/4 TL	SNL 522-619	TSN 522L	23222CCK/W33	HE 2322	FRB 5.1/200	2	75.4	34.2	ASNH 522-619
	SNL C2522/4 TL	SNL 522-619	TSN 522L	C2222 K*	HE 322E	FRB 13.5/200	2	68.3	31.0	ASNH 522-619
4 3/16	SNL 1524/4 3/16 TGA	SNL 524-620	TSN 524GA	1224 K	HA 3124	FRB 22/215	2	81.1	36.8	ASNH 524-620
	SNL 22524/4 3/16 TGA	SNL 524-620	TSN 524GA	22224 EK	HA 3124	FRB 14/215	2	82.4	37.4	ASNH 524-620
	SNL 23524/4 3/16 TGA	SNL 524-620	TSN 524GA	23224CCK/W33	HA 2324	FRB 5/215	2	90.2	40.9	ASNH 524-620
	SNL C3524/4 3/16 TGA	SNL 524-620	TSN 524GA	C3224 K*	HA 2324L	FRB 5/215	2	90.2	40.9	ASNH 524-620
4 1/4	SNL 1524/4 1/4 TGE	SNL 524-620	TSN 524GE	1224 K	HE 3124	FRB 22/215	2	80.9	36.7	ASNH 524-620
	SNL 22524/4 1/4 TGE	SNL 524-620	TSN 524GE	22224 EK	HE 3124	FRB 14/215	2	82.4	37.4	ASNH 524-620
	SNL 23524/4 1/4 TGE	SNL 524-620	TSN 524GE	23224CCK/W33	HE 2324	FRB 5/215	2	90.2	40.9	ASNH 524-620
	SNL C3524/4 1/4 TGE	SNL 524-620	TSN 524GE	C3224 K*	HE 2324L	FRB 5/215	2	90.2	40.9	ASNH 524-620
110	SNL 1524/110 TG	SNL 524-620	TSN 524G	1224 K	H 3124	FRB 22/215	2	80.5	36.5	ASNH 524-620
	SNL 22524/110 TG	SNL 524-620	TSN 524G	22224 EK	H 3124	FRB 14/215	2	82.4	37.4	ASNH 524-620
	SNL 23524/110 TG	SNL 524-620	TSN 524G	23224CCK/W33	H 2324	FRB 5/215	2	90.2	40.9	ASNH 524-620
	SNL C3524/110 TG	SNL 524-620	TSN 524G	C3224 K*	H 2324L	FRB 5/215	2	90.2	40.9	ASNH 524-620

*Must always be located.

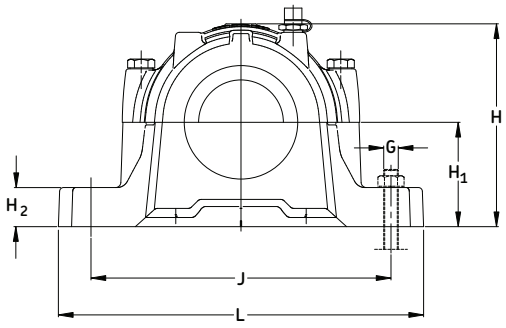

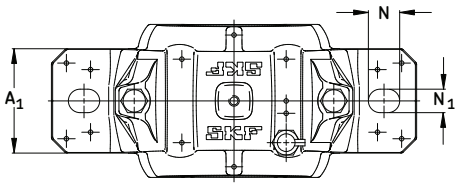

Housing No.	Dimensions													Bolts (2 req'd)	
	A	A_1	A_2	A_3	H	H_1	H_2	J_{max}	J_{min}	J	L	N	N_1	G	S*
	in/mm														
SNL 522-619	6 15/16	4 3/4	7 9/16	9 7/8	9 1/2	4.921	1 3/4	14	13 9/16	13 11/16	16 1/8	1 1/4	1	7/8	*
	175	120	191	250	242	125	45	356	344	350	410	32	26	24	*
SNL 524-620	7 5/16	4 3/4	7 7/8	10 1/4	10 11/16	5.512	1 3/4	14	13 9/16	13 11/16	16 1/8	1 1/4	1	7/8	*
	185	120	199	260	271	140	45	356	344	350	410	32	26	24	*

***NOTE:** Dimension "S" indicates the shaft length from the centre of the bearing to the end of the shaft for housings with one end closed. For tabulation of the dimension "S", see the bearing tables on pages 52 and 53.

For an example on how to order, please see page 57.

Series SNL 500 and SNL 600 Pillow blocks of cast iron for bearing with adapter sleeve, grease or oil lubrication d_a 4 7/16 - 5 in (115 - 125 mm)

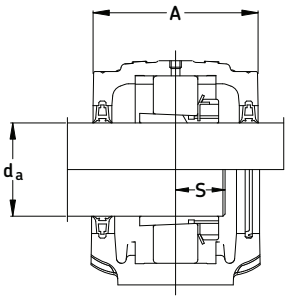

Double-lip seals
G & L design

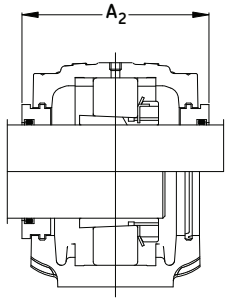

Labyrinth seals
S design

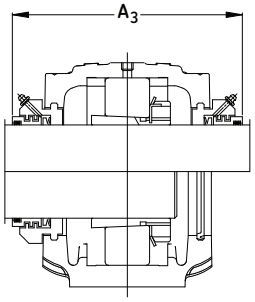

Taconite seals
ND design

Shaft Dia. d_a	Complete Pillow Block Assembly	Housing	Standard Seal Package	Bearing	Adapter Sleeve	Fixing Rings	Qty.	Mass Complete		End Cover
mm in								lb.	kg.	
4 7/16	SNL 22526/4 7/16 TGA	SNL 526	TSN 526GA	22226 EK	HA 3126	FRB 13/230	2	104	47.2	ASNH 526
	SNL 23526/4 7/16 TGA	SNL 526	TSN 526GA	23226CCK/W33	HA 2326	FRB 5/230	2	113	51.1	ASNH 526
	SNL C2526/4 7/16 TGA	SNL 526	TSN 526GA	C2226 K*	HA 3126L	FRB 13/230	2	104	42.2	ASNH 526
4 1/2	SNL 22526/ 4 1/2 TG	SNL 526	TSN 526G	22226 EK	HE 3126	FRB 13/230	2	104	47.2	ASNH 526
	SNL 23526/ 4 1/2 TG	SNL 526	TSN 526G	23226CCK/W33	HE 2326	FRB 5/230	2	113	51.1	ASNH 526
	SNL C2526/ 4 1/2 TG	SNL 526	TSN 526G	C2226 K*	HE 3126L	FRB 13/230	2	104	42.2	ASNH 526
115	SNL 22526/115 TG	SNL 526	TSN 526G	22226 EK	H 3126	FRB 13/230	2	104	47.2	ASNH 526
	SNL 23526/115 TG	SNL 526	TSN 526G	23226CCK/W33	H 2326	FRB 5/230	2	113	51.1	ASNH 526
	SNL C2526/115 TG	SNL 526	TSN 526G	C2226 K*	H 3126L	FRB 13/230	2	104	42.2	ASNH 526
125	SNL 22528/125 TG	SNL 528	TSN 528G	22228CCK/W33	H 3128	FRB 15/250	2	128	57.9	ASNH 528
	SNL 23528/125 TG	SNL 528	TSN 528G	23228CCK/W33	H 2328	FRB 5/250	2	140	63.6	ASNH 528
	SNL C2528/125 TG	SNL 528	TSN 528G	C2228 K*	H 3128L	FRB 15/250	2	128	57.9	ASNH 528
4 15/16	SNL 22528/4 15/16 TG	SNL 528	TSN 528G	22228CCK/W33	HA 3128	FRB 15/250	2	128	57.9	ASNH 528
	SNL 23528/4 15/16 TG	SNL 528	TSN 528G	23228CCK/W33	HA 2328	FRB 5/250	2	140	63.6	ASNH 528
	SNL C2528/4 15/16 TG	SNL 528	TSN 528G	C2228 K *	HA 3128L	FRB 15/250	2	128	57.9	ASNH 528
5	SNL 22528/5 TGE	SNL 528	TSN 528GE	22228CCK/W33	HE 3128	FRB 15/250	2	128	57.9	ASNH 528
	SNL 23528/5 TGE	SNL 528	TSN 528GE	23228CCK/W33	HE 2328	FRB 5/250	2	140	63.6	ASNH 528
	SNL C2528/5 TGE	SNL 528	TSN 528GE	C2228 K*	HE 3128L	FRB 15/250	2	128	57.9	ASNH 528

* Must always be located.

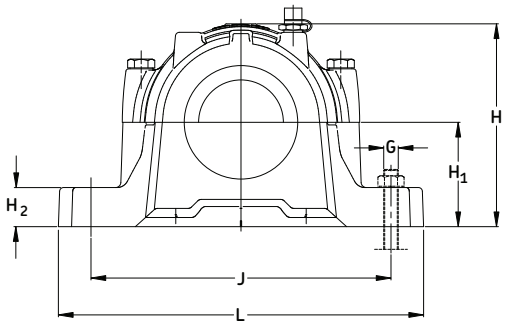

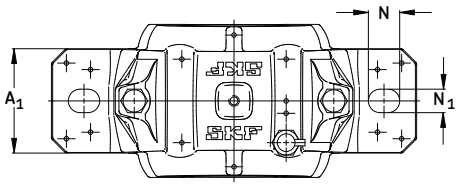

Housing No.	Dimensions													Bolts (2 req'd)	
	A	A_1	A_2	A_3	H	H_1	H_2	J_{max}	J_{min}	J	L	N	N_1	G	S*
	in/mm														
SNL 526	7 1/2	5 1/8	8 3/16	10 7/16	11 7/16	5.906	2	15 1/4	14 11/16	15	17 9/16	1 3/8	1 1/8	1	*
	190	130	208	265	290	150	50	387	373	380	445	35	28	24	*
SNL 528	8 1/8	5 15/16	8 13/16	11 1/4	11 15/16	5.906	2	16 3/4	16 15/16	16 9/16	19 11/16	1 11/16	1 3/8	1 1/4	*
	205	150	223	285	302	150	50	427	413	420	500	42	35	30	*

***NOTE:** Dimension "S" indicates the shaft length from the centre of the bearing to the end of the shaft for housings with one end closed. For tabulation of the dimension "S", see the bearing tables on pages 52 and 53.

For an example on how to order, please see page 57.

Series SNL 500 and SNL 600 Pillow blocks of cast iron for bearing with adapter sleeve, grease or oil lubrication d_a 5 3/16 - 5 1/2 in (135 - 140 mm)

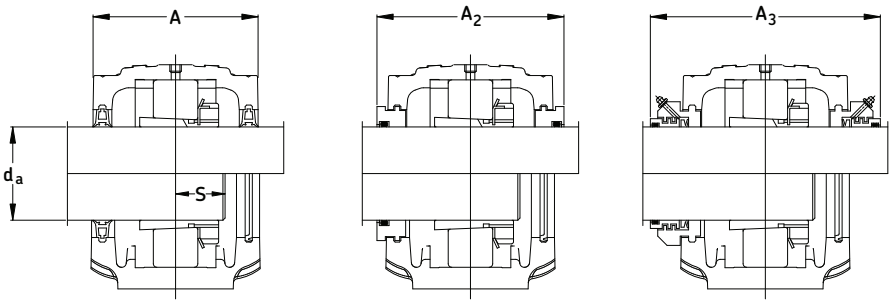

Double-lip seals
G & L design

Labyrinth seals
S design

Taconite seals
ND design

Shaft Dia. d_a	Complete Pillow Block Assembly	Housing	Standard Seal Package	Bearing	Adapter Sleeve	Fixing Rings	Qty.	Mass Complete		End Cover
mm in								lb.	kg.	
5 3/16	SNL 22530/5 3/16 TGA	SNL 530	TSN 530GA	22230CCK/W33	HA 3130	FRB 16.5/270	2	159	72.0	ASNH 530
	SNL 23530/5 3/16 TGA	SNL 530	TSN 530GA	23230CCK/W33	HA 2330	FRB 5/270	2	174	79.1	ASNH 530
	SNL C2530/5 3/16 TGA	SNL 530	TSN 530GA	C2230 K*	HA 3130L	FRB 16.5/270	2	159	72.0	ASNH 530
5 1/4	SNL 22530/5 1/4 TGE	SNL 530	TSN 530GE	22230CCK/W33	HE 3130	FRB 16.5/270	2	159	72.0	ASNH 530
	SNL 23530/5 1/4 TGE	SNL 530	TSN 530GE	23230CCK/W33	HE 2330	FRB 5/270	2	174	79.1	ASNH 530
	SNL C2530/5 1/4 TGE	SNL 530	TSN 530GE	C2230 K*	HE 3130L	FRB 16.5/270	2	159	72.0	ASNH 530
135	SNL 22530/135 TG	SNL 530	TSN 530G	22230CCK/W33	H 3130	FRB 16.5/270	2	159	72.0	ASNH 530
	SNL 23530/135 TG	SNL 530	TSN 530G	23230CCK/W33	H 2330	FRB 5/270	2	174	79.1	ASNH 530
	SNL C2530/135 TG	SNL 530	TSN 530G	C2230 K*	H 3130L	FRB 16.5/270	2	159	72.0	ASNH 530
5 7/16	SNL 22532/5 7/16 TGA	SNL 532	TSN 532GA	22232CCK/W33	HA 3132	FRB 17/290	2	187	84.7	ASNH 532
	SNL 23532/5 7/16 TGA	SNL 532	TSN 532GA	23232CCK/W33	HA 2332	FRB 5/290	2	205	93.2	ASNH 532
	SNL C3532/5 7/16 TGA	SNL 532	TSN 532GA	C3232 K*	HA 2332L	FRB 5/290	2	205	93.2	ASNH 532
5 1/2	SNL 22532/5 1/2 TG	SNL 532	TSN 532G	22232CCK/W33	HE 3132	FRB 17/290	2	187	84.7	ASNH 532
	SNL 23532/5 1/2 TG	SNL 532	TSN 532G	23232CCK/W33	HE 2332	FRB 5/290	2	205	93.2	ASNH 532
	SNL C3532/5 1/2 TG	SNL 532	TSN 532G	C3232 K*	HE 2332L	FRB 5/290	2	205	93.2	ASNH 532
140	SNL 22532/140 TG	SNL 532	TSN 532G	22232CCK/W33	H 3132	FRB 17/290	2	187	84.7	ASNH 532
	SNL 23532/140 TG	SNL 532	TSN 532G	23232CCK/W33	H 2332	FRB 5/290	2	205	93.2	ASNH 532
	SNL C3532/140 TG	SNL 532	TSN 532G	C3232 K*	H 2332L	FRB 5/290	2	205	93.2	ASNH 532

* Must always be located.

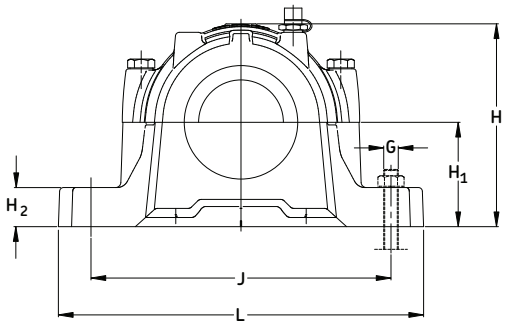

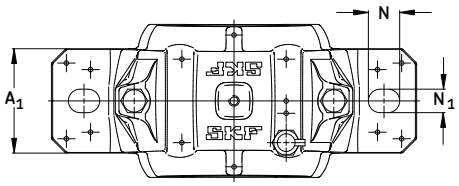

Housing No.	Dimensions													Bolts (2 req'd)	
	A	A_1	A_2	A_3	H	H_1	H_2	J_{max}	J_{min}	J	L	N	N_1	G	S*
	in/mm														
SNL 530	8 11/16	6 5/16	9 1/2	11 5/8	12 3/4	6.299	2 3/8	17 15/16	17 1/2	17 3/4	20 7/8	1 11/16	1 3/8	1 1/4	*
	220	160	241	295	323	160	60	457	443	450	530	42	35	30	*
SNL 532	9 1/4	6 5/16	10	12 7/16	13 9/16	6.693	2 3/8	18 3/4	18 1/4	18 1/2	21 11/16	1 11/16	1 3/8	1 1/4	*
	235	160	254	315	344	170	60	477	463	470	550	42	35	30	*

***NOTE:** Dimension "S" indicates the shaft length from the centre of the bearing to the end of the shaft for housings with one end closed. For tabulation of the dimension "S", see the bearing tables on pages 52 and 53.

For an example on how to order, please see page 57.

Pillow Block Housings

SNL, SSNLD

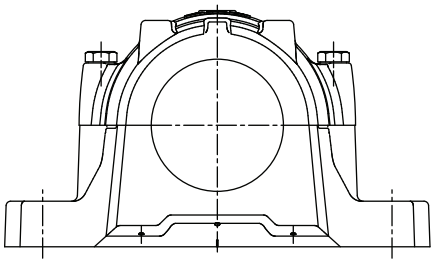

MATERIAL	SNL: cast iron GG20 (ISO/DIS 185 grade 200) SSNLD: Ductile iron	
BEARING SERIES USED	12, 12E, 13, 22, 22E, 23, 222CC, 222E, 223CC, 223E C 22, C 23, C32	
SHAFT SIZE RANGE	3/4" TO 5-1/2"	25mm TO 160mm
PILLOW BLOCK SIZE	205 - 232 (cylindrical bore mounting) 305 - 320 (cylindrical bore mounting)	
PILLOW BLOCK LUBRICATION	Grease (for oil lubrication consult SKF)	
STANDARD SEALS	TSN-G 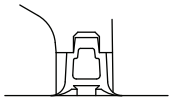	TSN-L 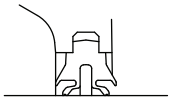
OPTIONAL SEALS	TSN-A 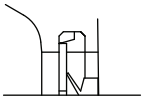	TSN-C 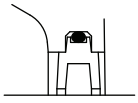
	TSN-S 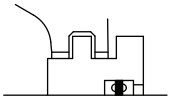	Loose felt strips 2 x FS 
	Taconite TSN-ND 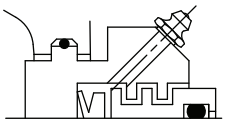	

SNL Split Pillow Block Nomenclature
Cylindrical Bore Mounting

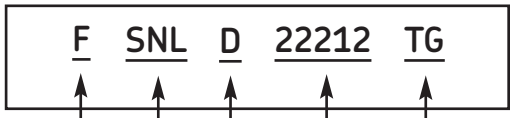

Base	
~~0~~	Two bolt (standard)
F	Four bolt*
S	Blank base (dimple marks only for holes)*
Basic Design	
Material	
~~0~~	Cast iron
D	Ductile iron
Size	
	Bearing bore: 12 = 60mm
Suffixes	
D	Purgeable labyrinth seal (TSNC-D c/w V ring) (1/pkg)
E	Purgeable labyrinth seal (TSNC-E, without V ring) (1/pkg)
H	Held unit, 2 fixing rings included
K7	Tighter housing fit that can be used with CARB bearings for high speeds or vibration
MC 106	Drilled and tapped ¼ - 28 UNF at both sides of cap. Two grease fittings 1792-B supplied with housing for seal purging
TA	V ring "A" seal (2/pkg)
TC	Felt "C" seal (2/pkg)
TG	Double lip "G" seal (2/pkg)
TL	Double lip "L" seal for metric sizes; Only TSN 507 toTSN 522 are available as of March 2007 (2/pkg)
TND	Taconite seal (1/pkg)
TS	Standard labyrinth "S" seal (1/pkg)
V	Open grease escape hole in base
VU	Two grease escape holes diagonally opposed on the side faces
Y	One end closed with end cover or end plug

How to order SNL (example): A customer-made sleeve is required for the stepped down side.

When you order one SNL 22212 TG you will receive a package containing the following:

1 - Pillow block housing SNL 212: Cap drilled, tapped and one grease fitting AH ⅛ -27 PTF included
1 - Bearing SKF 22212 E
1 - Seal kit TSN 212 G, containing 2 double lip seals to design "G" for shaft diameter db 70 mm

If a "HELD" or "FIXED" unit is required, add the suffix "H" and two FRB 10/110 fixing rings will be included.
Only one bearing per shaft should be held. CARB bearings displace internally and are therefore always "FREE".
However they must always be located in the housing with fixing rings, as does a true "FIXED" bearing.
If a unit with one end closed is required, add the suffix "Y" and one ASNH 515-612 end cover will be included.

*** CAUTION: If replacing a drilled blank base unit with a 4 hole base unit, the holes are NOT in the same position.**

SNL - Cylindrical Bore Mounting
Series SNL 200 and SNL 300
Pillow blocks of cast iron for bearings with cylindrical bore mounting, grease or oil lubrication
d_a 25 - 40 mm
d_b 30 - 50 mm

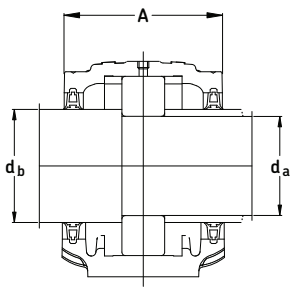

Double-lip seals
G & L design

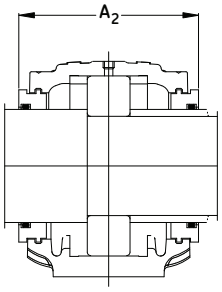

Labyrinth seals
S design

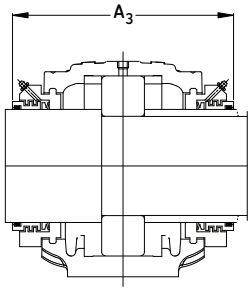

Taconite seals
ND design

Shaft Dia. d_a/d_b		Complete Pillow Block Assembly	Housing	Standard Seal Package	Bearing	Fixing Rings	Qty.	Mass Complete		End Cover
mm								lb.	kg.	
25	30	SNL 1205 TG	SNL 205	TSN 205G	1205 E	FRB 5/52	2	3.44	1.56	ASNH 506-605
		SNL 1305 TG	SNL 206-305	TSN 305G	1305 E	FRB 7.5/62	2	4.85	2.20	ASNH 507-605
		SNL 2205 TG	SNL 205	TSN 205G	2205 E	FRB 3.5/52	2	4.10	1.86	ASNH 506-605
		SNL 2305 TG	SNL 206-305	TSN 305G	2305	FRB 4/62	2	4.98	2.26	ASNH 507-605
		SNL 21305 TG	SNL 206-305	TSN 305G	21305 CC	FRB 7.5/62	2	4.83	2.19	ASNH 507-605
		SNL 22205 TG	SNL 205	TSN 205G	22205 E	FRB 3.5/52	2	3.53	1.60	ASNH 506-605
		SNL C2205 TG	SNL 205	TSN 205G	C2205*	FRB 3.5/52	2	4.10	1.86	ASNH 506-605
30	35	SNL 1206 TG	SNL 206-305	TSN 206G	1206 E	FRB 8/62	2	4.76	2.16	ASNH 507-606
		SNL 1306 TG	SNL 507-606	TSN 306G	1306 E	FRB 7.5/72	2	5.82	2.64	ASNH 507-606
		SNL 2206 TG	SNL 206-305	TSN 206G	2206 E	FRB 6/62	2	4.83	2.19	ASNH 507-606
		SNL 2306 TG	SNL 507-606	TSN 306G	2306	FRB 3.5/72	2	6.22	2.82	ASNH 507-606
		SNL 21306 TG	SNL 507-606	TSN 306G	21306 CC	FRB 7.5/72	2	5.80	2.63	ASNH 507-606
		SNL 22206 TG	SNL 206-305	TSN 206G	22206 E	FRB 6/62	2	4.87	2.21	ASNH 507-606
		SNL C2206 TG	SNL 206-305	TSN 206G	C2206*	FRB 6/62	2	4.83	2.19	ASNH 507-606
35	45	SNL 1207 TG	SNL 207	TSN 207G	1207 E	FRB 8.5/72	2	5.47	2.48	ASNH 509
		SNL 1307 TG	SNL 208-307	TSN 307G	1307 E	FRB 9/80	2	7.67	3.48	ASNH 510-608
		SNL 2207 TG	SNL 207	TSN 207G	2207 E	FRB 5.5/72	2	5.60	2.54	ASNH 509
		SNL 2307 TG	SNL 208-307	TSN 307G	2307 E	FRB 4/80	2	7.96	3.61	ASNH 510-608
		SNL 21307 TG	SNL 208-307	TSN 307G	21307 CC	FRB 9/80	2	7.67	3.48	ASNH 510-608
		SNL 22207 TG	SNL 207	TSN 207G	22207 E	FRB 5.5/72	2	5.67	2.57	ASNH 509
		SNL C2207 TG	SNL 207	TSN 207G	C2207*	FRB 5.5/72	2	5.67	2.57	ASNH 509
40	50	SNL 1208 TG	SNL 208-307	TSN 208G	1208 E	FRB 10.5/80	2	7.17	3.25	ASNH 510-608
		SNL 1308 TG	SNL 510-608	TSN 308G	1308 E	FRB 9/90	2	8.82	4.00	ASNH 510-608
		SNL 2208 TG	SNL 208-307	TSN 208G	2208 E	FRB 8/80	2	8.55	3.88	ASNH 510-608
		SNL 2308 TG	SNL 510-608	TSN 308G	2308 E	FRB 4/90	2	9.19	4.17	ASNH 510-608
		SNL 21308 TG	SNL 510-608	TSN 308G	21308 E	FRB 9/90	2	8.80	3.99	ASNH 510-608
		SNL 22208 TG	SNL 208-307	TSN 208G	22208 E	FRB 8/80	2	7.28	3.30	ASNH 510-608
		SNL 22308 TG	SNL 510-608	TSN 308G	22308 E	FRB 4/90	2	10.3	4.67	ASNH 510-608

* Must always be located.

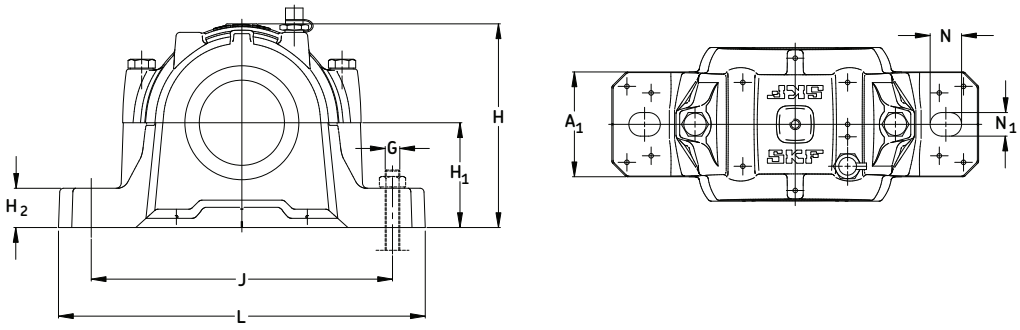

Housing No.	Dimensions													Bolts (2 req'd)
	A	A_1	A_2	A_3	H	H_1	H_2	J_{max}	J_{min}	J	L	N	N_1	G
	in/mm													
SNL 205	2 5/8	1 13/16	3 9/16	5 1/2	2 15/16	1.575	3/4	5 3/8	4 7/8	5 1/8	6 1/2	3/4	5/8	1/2
	67	46	90	140	74	40	19	137	123	130	165	20	15	12
SNL 206-305	3 1/16	2 1/16	3 3/8	5 15/16	3 3/8	1.969	7/8	6 1/8	5 11/16	5 15/16	7 5/16	3/4	5/8	1/2
	77	52	89	150	89	50	22	157	143	150	185	20	15	12
SNL 507-606	3 1/4	2 1/16	3 3/4	6 1/8	3 5/8	1.969	7/8	6 1/8	5 11/16	5 15/16	7 5/16	3/4	5/8	1/2
	82	52	94	155	93	50	22	157	143	150	185	20	15	12
SNL 207	3 1/4	2 1/16	3 3/4	6 1/8	3 5/8	1.969	7/8	6 1/8	5 11/16	5 15/16	7 5/16	3/4	5/8	1/2
	82	52	96	155	93	50	22	157	143	150	185	20	15	12
SNL 208-307	3 3/8	2 3/8	3 15/16	6 15/16	4 1/4	2.362	1	6 7/8	6 1/2	6 11/16	8 1/8	3/4	5/8	1/2
	85	60	99	160	108	60	25	175	165	170	205	20	15	12
SNL 510-608	3 9/16	2 3/8	4	6 9/16	4 1/2	2.362	1	6 7/8	6 1/2	6 11/16	8 1/8	3/4	5/8	1/2
	90	60	102	167	113	60	25	175	165	170	205	20	15	12

For an example on how to order, please see page 91.

SNL - Cylindrical Bore Mounting
Series SNL 200 and SNL 300
Pillow blocks of cast iron for bearings with cylindrical bore mounting, grease or oil lubrication
d_a 45 - 55 mm
d_b 55 - 65 mm

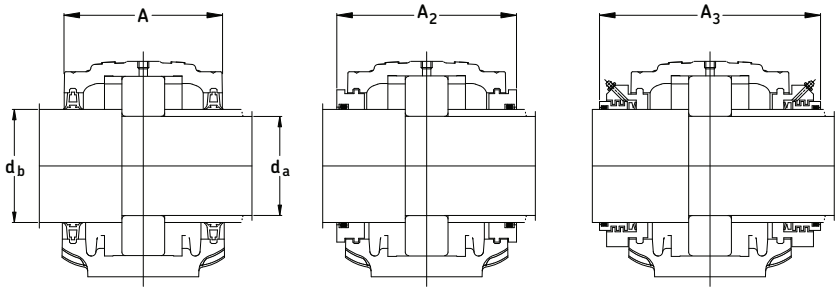

Double-lip seals
G & L design

Labyrinth seals
S design

Taconite seals
ND design

Shaft Dia. d_a/d_b		Complete Pillow Block Assembly	Housing	Standard Seal Package	Bearing	Fixing Rings	Qty.	Mass Complete		End Cover
mm								lb.	kg.	
45	55	SNL 1209 TG	SNL 209	TSN 209G	1209 E	FRB 5.5/85	2	7.21	3.27	ASNH 511-609
		SNL 1309 TG	SNL 511-609	TSN 309G	1309 E	FRB 9.5/100	2	12.0	5.45	ASNH 511-609
		SNL 2209 TG	SNL 209	TSN 209G	2209 E	FRB 3.5/85	2	7.34	3.33	ASNH 511-609
		SNL 2309 TG	SNL 511-609	TSN 309G	2309 E	FRB 4/100	2	12.5	5.69	ASNH 511-609
		SNL 21309 TG	SNL 511-609	TSN 309G	21309 E	FRB 9.5/100	2	12.0	5.44	ASNH 511-609
		SNL 22209 TG	SNL 209	TSN 209G	22209 E	FRB 3.5/85	2	7.36	3.34	ASNH 511-609
		SNL 22309 TG	SNL 511-609	TSN 309G	22309 E	FRB 4/100	2	12.8	5.79	ASNH 511-609
		SNL C2209 TG	SNL 209	TSN 209G	C2209*	FRB 3.5/85	2	12.8	5.79	ASNH 511-609
50	60	SNL 1210 TG	SNL 210	TSN 210G	1210 E	FRB 10.5/90	2	7.98	3.62	ASNH 512-610
		SNL 1310 TG	SNL 512-610	TSN 310G	1310 E	FRB 10.5/110	2	14.2	6.43	ASNH 512-610
		SNL 2210 TG	SNL 210	TSN 210G	2210 E	FRB 9/90	2	8.11	3.68	ASNH 512-610
		SNL 2310 TG	SNL 512-610	TSN 310G	2310	FRB 4/110	2	15.0	6.80	ASNH 512-610
		SNL 21310 TG	SNL 512-610	TSN 310G	21310 E	FRB 10.5/110	2	14.2	6.43	ASNH 512-610
		SNL 22210 TG	SNL 210	TSN 210G	22210 E	FRB 9/90	2	8.11	3.68	ASNH 512-610
		SNL 22310 TG	SNL 512-610	TSN 310G	22310 E	FRB 4/110	2	15.4	7.00	ASNH 512-610
		SNL C2210 TG	SNL 210	TSN 210G	C2210*	FRB 9/90	2	15.3	6.94	ASNH 512-610
55	65	SNL 1211 TG	SNL 211	TSN 211G	1211 E	FRB 11.5/100	2	11.1	5.02	ASNH 513-611
		SNL 1311 TG	SNL 513-611	TSN 311G	1311 E	FRB 11/120	2	18.2	8.25	ASNH 513-611
		SNL 2211 TG	SNL 211	TSN 211G	2211 E	FRB 9.5/100	2	11.2	5.10	ASNH 513-611
		SNL 2311 TG	SNL 513-611	TSN 311G	2311	FRB 4/120	2	19.1	8.65	ASNH 513-611
		SNL 21311 TG	SNL 513-611	TSN 311G	21311 E	FRB 11/120	2	18.2	8.25	ASNH 513-611
		SNL 22211 TG	SNL 211	TSN 211G	22211 E	FRB 9.5/100	2	11.3	5.11	ASNH 513-611
		SNL 22311 TG	SNL 513-611	TSN 311G	22311 E	FRB 4/120	2	19.6	8.90	ASNH 513-611
		SNL C2211 TG	SNL 211	TSN 211G	C2211*	FRB 9.5/100	2	11.3	5.11	ASNH 513-611

* Must always be located.

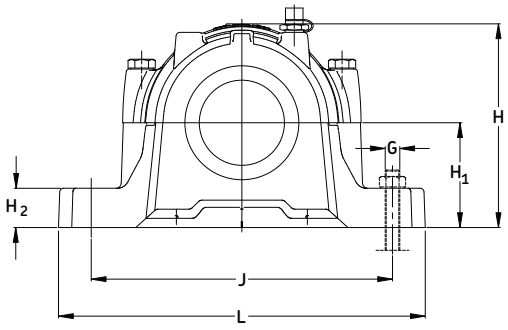

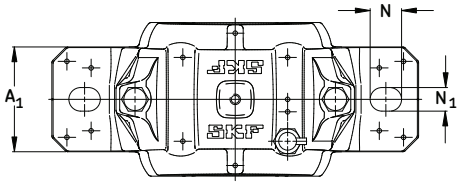

Housing No.	Dimensions													Bolts (2 req'd)
	A	A_1	A_2	A_3	H	H_1	H_2	J_{max}	J_{min}	J	L	N	N_1	G
	in/mm													
SNL 209	3 3/8	2 3/8	3 13/16	6 5/16	4 1/4	2.362	1	6 7/8	6 1/2	6 11/16	8 1/8	3/4	5/8	1/2
	85	60	97	160	109	60	25	175	165	170	205	20	15	12
SNL 210	3 9/16	2 3/8	4	6 1/2	4 1/2	2.362	1	6 7/8	6 1/2	6 11/16	8 1/8	3/4	5/8	1/2
	90	60	102	165	113	60	25	175	165	170	205	20	15	12
SNL 511-609	3 3/4	2 3/4	4 1/4	6 11/16	5	2.756	1 1/8	8 7/16	8 1/8	8 5/16	10 1/16	1	3/4	5/8
	95	70	107	172	128	70	28	215	205	210	255	24	18	16
SNL 211	3 3/4	2 3/4	4 1/4	6 11/16	5	2.756	1 1/8	8 7/16	8 1/8	8 5/16	10 1/16	1	3/4	5/8
	95	70	107	170	128	70	28	215	205	210	255	24	18	16
SNL 512-610	4 1/4	2 3/4	4 5/8	7 1/8	5 1/4	2.756	1 3/16	8 7/16	8 1/8	8 5/16	10 1/16	1	3/4	5/8
	105	70	117	187	134	70	30	215	205	210	255	24	18	16
SNL 513-611	4 3/8	3 1/8	5	7 1/2	5 7/8	3.150	1 3/16	9 3/8	9 3/4	9 1/8	10 13/16	1	3/4	5/8
	110	80	128	192	149	80	30	238	222	230	275	24	18	16

For an example on how to order, please see page 91.

SNL - Cylindrical Bore Mounting
Series SNL 200 and SNL 300
Pillow blocks of cast iron for bearings with cylindrical bore mounting, grease or oil lubrication
d_a 60 - 70 mm
d_b 70 - 80 mm

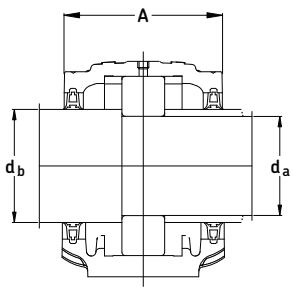

Double-lip seals
G & L design

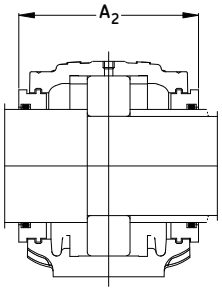

Labyrinth seals
S design

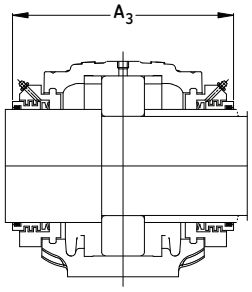

Taconite seals
ND design

Shaft Dia. d_a/d_b		Complete Pillow Block Assembly	Housing	Standard Seal Package	Bearing	Fixing Rings	Qty.	Mass Complete		End Cover
mm								lb.	kg.	
60	70	SNL 1212 TG	SNL 212	TSN 212G	1212 E	FRB 13/110	2	12.8	5.81	ASNH 515-612
		SNL 1312 TG	SNL 515-612	TSN 312G	1312 E	FRB 12.5/130	2	20.2	9.17	ASNH 515-612
		SNL 2212 TG	SNL 212	TSN 212G	2212 E	FRB 10/110	2	13.2	5.97	ASNH 515-612
		SNL 2312 TG	SNL 515-612	TSN 312G	2312	FRB 5/130	2	21.4	9.69	ASNH 515-612
		SNL 21312 TG	SNL 515-612	TSN 312G	21312 E	FRB 12.5/130	2	20.2	9.17	ASNH 515-612
		SNL 22212 TG	SNL 212	TSN 212G	22212 E	FRB 10/110	2	13.2	5.97	ASNH 515-612
		SNL 22312 TG	SNL 515-612	TSN 312G	22312 E	FRB 5/130	2	22.0	9.99	ASNH 515-612
		SNL C2212 TG	SNL 212	TSN 212G	C2212*	FRB 10/110	2	13.2	5.97	ASNH 515-612
65	75	SNL 1213 TG	SNL 213	TSN 213G	1213 E	FRB 14/120	2	16.4	7.44	ASNH 516-613
		SNL 1313 TG	SNL 516-613	TSN 313G	1313 E	FRB 12.5/140	2	26.9	12.2	ASNH 516-613
		SNL 2213 TG	SNL 213	TSN 213G	2213 E	FRB 10/120	2	20.8	9.44	ASNH 516-613
		SNL 2313 TG	SNL 516-613	TSN 313G	2313	FRB 5/140	2	28.2	12.8	ASNH 516-613
		SNL 21313 TG	SNL 516-613	TSN 313G	21313 E	FRB 12.5/140	2	26.9	12.2	ASNH 516-613
		SNL 22213 TG	SNL 213	TSN 213G	22213 E	FRB 10/120	2	20.8	9.44	ASNH 516-613
		SNL 22313 TG	SNL 516-613	TSN 313G	22313E	FRB 12.5/140	2	20.8	9.44	ASNH 516-613
		SNL C2213 TG	SNL 213	TSN 213G	C2213*	FRB 10/120	2	20.8	9.44	ASNH 516-613
70	80	SNL 1314 TG	SNL 517	TSN 314G	1314	FRB 13/150	2	29.3	13.3	ASNH 517
		SNL 2314 TG	SNL 517	TSN 314G	2314	FRB 5/150	2	30.9	14.0	ASNH 517
		SNL 21314 TG	SNL 517	TSN 314G	21314 E	FRB 13/150	2	29.3	13.3	ASNH 517
		SNL 22314 TG	SNL 517	TSN 314G	22314 E	FRB 5/150	2	31.7	14.4	ASNH 517
		SNL C2314 TG	SNL 517	TSN 314G	C2314*	FRB 5/150	2	30.9	14.0	ASNH 517

* Must always be located.

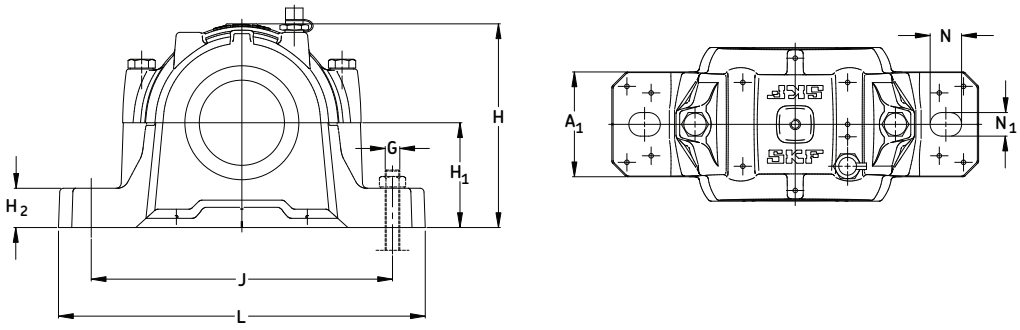

Housing No.	Dimensions													Bolts (2 req'd)
	A	A_1	A_2	A_3	H	H_1	H_2	J_{max}	J_{min}	J	L	N	N_1	G
	in/mm													
SNL 212	4 1/4	2 3/4	4 5/8	7 1/8	5 1/4	2.756	1 3/16	8 7/16	8 1/8	8 5/16	10 1/16	1	3/4	5/8
	105	70	117	180	134	70	30	215	205	210	255	24	18	16
SNL 213	4 3/8	3 1/8	5	7 9/16	5 7/8	3.150	1 3/16	9 3/8	8 3/4	9 1/8	10 13/16	1	3/4	5/8
	110	80	128	190	149	80	30	238	222	230	275	24	18	16
SNL 515-612	4 5/8	3 1/8	5	6 7/8	6 1/8	3.150	1 3/16	9 3/8	8 3/4	9 1/8	11	1	3/4	5/8
	115	80	127	175	154	80	30	238	222	230	280	24	18	16
SNL 516-613	4 3/4	3 5/8	5 7/16	7 7/8	7	3.740	1 1/4	10 1/2	9 15/16	10 1/4	12 7/16	1 1/8	7/8	3/4
	120	90	138	200	177	95	32	268	252	260	315	28	22	20
SNL 517	4 15/16	3 5/8	5 5/8	8	7 1/4	3.740	1 1/4	10 1/2	9 15/16	10 1/4	12 7/16	1 1/8	7/8	3/4
	125	90	143	205	183	95	32	268	252	260	320	28	22	20

For an example on how to order, please see page 91.

SNL - Cylindrical Bore Mounting
Series SNL 200 and SNL 300
Pillow blocks of cast iron for bearings with cylindrical bore mounting, grease or oil lubrication
d_a 75 - 85 mm
d_b 85 - 95 mm

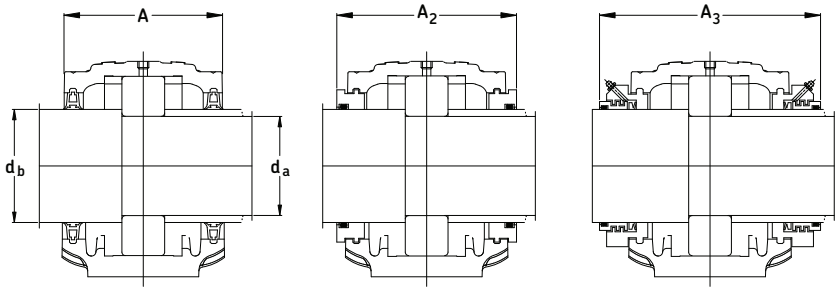

Double-lip seals
G & L design

Labyrinth seals
S design

Taconite seals
ND design

Shaft Dia. d_a/d_b		Complete Pillow Block Assembly	Housing	Standard Seal Package	Bearing	Fixing Rings	Qty.	Mass Complete		End Cover
mm								lb.	kg.	
75	85	SNL 1215 TG	SNL 215	TSN 215G	1215	FRB 15.5/130	2	18.1	8.22	ASNH 518-615
		SNL 1315 TG	SNL 518-615	TSN 315G	1315	FRB 14/160	2	36.2	16.4	ASNH 518-615
		SNL 2215 TG	SNL 215	TSN 215G	2215 E	FRB 12.5/130	2	18.6	8.42	ASNH 518-615
		SNL 2315 TG	SNL 518-615	TSN 315G	2315	FRB 5/160	2	38.1	17.3	ASNH 518-615
		SNL 21315 TG	SNL 518-615	TSN 315G	21315 E	FRB 14/160	2	36.2	16.4	ASNH 518-615
		SNL 22215 TG	SNL 215	TSN 215G	22215 E	FRB 12.5/130	2	18.8	8.52	ASNH 518-615
		SNL 22315 TG	SNL 518-615	TSN 315G	22315 E	FRB 5/160	2	39.5	17.9	ASNH 518-615
		SNL C2215 TG	SNL 215	TSN 215G	C2215*	FRB 12.5/130	2	18.6	8.42	ASNH 518-615
		SNL C2315 TG	SNL 518-615	TSN 315G	C2315*	FRB 5/160	2	38.4	17.4	ASNH 518-615
80	90	SNL 1216 TG	SNL 216	TSN 216G	1216	FRB 16/140	2	24.0	10.9	ASNH 216
		SNL 1316 TG	SNL 519-616	TSN 316G	1316	FRB 14.5/170	2	40.1	18.2	ASNH 519-616
		SNL 2216 TG	SNL 216	TSN 216G	2216 E	FRB 12.5/140	2	24.5	11.1	ASNH 216
		SNL 2316 TG	SNL 519-616	TSN 316G	2316	FRB 5/170	2	40.4	18.3	ASNH 519-616
		SNL 21316 TG	SNL 519-616	TSN 316G	21316 E	FRB 14.5/170	2	40.1	18.2	ASNH 519-616
		SNL 22216 TG	SNL 216	TSN 216G	22216 E	FRB 12.5/140	2	24.9	11.3	ASNH 216
		SNL 22316 TG	SNL 519-616	TSN 316G	22316 E	FRB 5/170	2	40.6	18.4	ASNH 519-616
		SNL C2216 TG	SNL 216	TSN 216G	C2216*	FRB 12.5/140	2	24.5	11.1	ASNH 216
		SNL C2316 TG	SNL 519-616	TSN 316G	C2316*	FRB 5/170	2	40.4	18.3	ASNH 519-616
85	95	SNL 1217 TG	SNL 217	TSN 217G	1217	FRB 16.5/150	2	26.2	11.9	ASNH 217
		SNL 1317 TG	SNL 520-617	TSN 317G	1317	FRB 14.5/180	2	50.7	23.0	ASNH 520-617
		SNL 2217 TG	SNL 217	TSN 217G	2217	FRB 12.5/150	2	26.9	12.2	ASNH 217
		SNL 2317 TG	SNL 520-617	TSN 317G	2317	FRB 5/180	2	54.7	24.8	ASNH 520-617
		SNL 21317 TG	SNL 520-617	TSN 317G	21317 E	FRB 14.5/180	2	50.7	23.0	ASNH 520-617
		SNL 22217 TG	SNL 217	TSN 217G	22217 E	FRB 12.5/150	2	27.3	12.4	ASNH 217
		SNL 22317 TG	SNL 520-617	TSN 317G	22317 E	FRB 5/180	2	55.1	25.0	ASNH 520-617
		SNL C2217 TG	SNL 217	TSN 217G	C2217*	FRB 12.5/150	2	26.9	12.2	ASNH 217
		SNL C2317 TG	SNL 520-617	TSN 317G	C2317*	FRB 5/180	2	54.7	24.8	ASNH 520-617

* Must always be located.

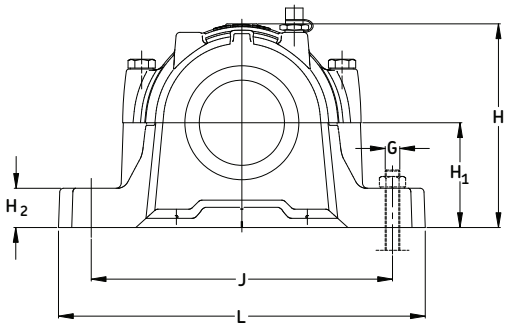

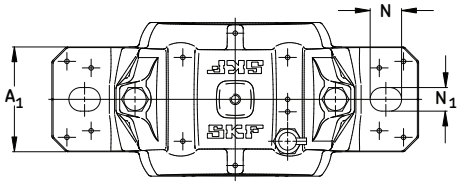

Housing No.	Dimensions													Bolts (2 req'd)
	A	A_1	A_2	A_3	H	H_1	H_2	J_{max}	J_{min}	J	L	N	N_1	G
	in/mm													
SNL 215	4 5/8	3 1/8	5 1/4	7 11/16	6 1/8	3.150	1 3/16	9 3/8	8 3/4	9 1/8	10 13/16	1	3/4	5/8
	115	80	133	195	155	80	30	238	222	230	280	24	18	16
SNL 216	4 3/4	3 5/8	5 7/16	7 7/8	7	3.740	1 1/4	10 1/2	9 15/16	10 1/4	12 7/16	1 1/8	7/8	3/4
	120	90	138	200	177	95	32	268	252	260	315	28	22	20
SNL 217	4 15/16	3 5/8	5 5/8	8	7 1/4	3.740	1 1/4	10 1/2	9 15/16	10 1/4	12 7/16	1 1/8	7/8	3/4
	125	90	143	205	183	95	32	268	252	260	320	28	22	20
SNL 518-615	5 1/2	3 15/16	6 1/4	8 11/16	7 5/8	3.937	1 3/8	11 5/8	11 1/4	11 7/16	13 5/8	1 1/8	7/8	3/4
	140	100	158	220	194	100	35	295	285	290	345	28	22	20
SNL 519-616	5 3/4	3 15/16	6 7/16	8 1/16	8 3/8	4.409	1 3/8	11 5/8	11 1/4	11 7/16	13 5/8	1 1/8	7/8	3/4
	145	100	163	205	212	112	35	295	285	290	345	28	22	20
SNL 520-617	6 5/16	4 5/16	7	8 11/16	8 9/16	4.409	1 9/16	12 3/16	12 3/8	12 5/8	15	1 1/4	1 1/32	1
	160	110	178	220	218	112	40	326	314	320	380	32	26	24

For an example on how to order, please see page 91.

SNL - Cylindrical Bore Mounting
Series SNL 200 and SNL 300
Pillow blocks of cast iron for bearings with cylindrical bore mounting, grease or oil lubrication
d_a 90 - 110 mm
d_b 100 - 125 mm

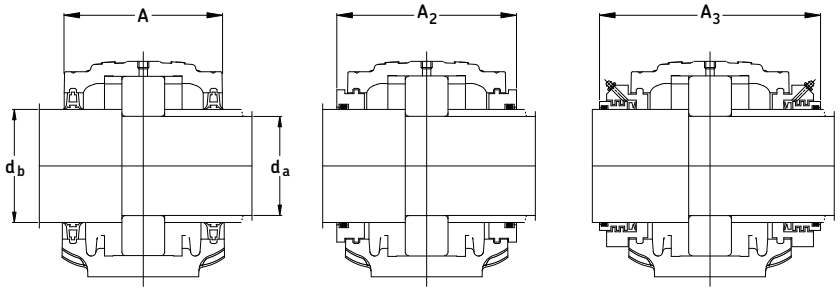

Double-lip seals
G & L design

Labyrinth seals
S design

Taconite seals
ND design

Shaft Dia. d_a/d_b		Complete Pillow Block Assembly	Housing	Standard Seal Package	Bearing	Fixing Rings	Qty.	Mass Complete		End Cover
mm								lb.	kg.	
90	100	SNL 1218 TG	SNL 218	TSN 218G	1218	FRB 17.5/160	2	32.4	14.7	ASNH 218
		SNL 2218 TG	SNL 218	TSN 218G	2218	FRB 12.5/160	2	34.8	15.8	ASNH 218
		SNL 22218 TG	SNL 218	TSN 218G	22218 E	FRB 12.5/160	2	34.2	15.5	ASNH 218
		SNL 23218 TG	SNL 218	TSN 218G	23218CC/W33	FRB 6.25/160	2	36.4	16.5	ASNH 218
		SNL C2218 TG	SNL 218	TSN 218G	C2218*	FRB 12.5/160	2	34.8	15.8	ASNH 218
95	110	SNL 1319 TA	SNL 522-619	TSN 319A	1319	FRB 17.5/200	2	64.6	29.3	ASNH 522-619
		SNL 2319 TA	SNL 522-619	TSN 319A	2319	FRB 6.5/200	2	70.6	32.0	ASNH 522-619
		SNL 21319 TA	SNL 522-619	TSN 319A	21319 E	FRB 17.5/200	2	65.5	29.7	ASNH 522-619
		SNL 22319 TA	SNL 522-619	TSN 319A	22319 E	FRB 6.5/200	2	71.0	32.2	ASNH 522-619
100	115	SNL 1220 TG	SNL 520-617	TSN 220G	1220	FRB 18/180	2	48.1	21.8	ASNH 520-617
		SNL 1320 TA	SNL 524-620	TSN 320A	1320	FRB 19.5/215	2	77.6	35.2	ASNH 524-620
		SNL 2220 TG	SNL 520-617	TSN 220G	2220	FRB 12/180	2	50.0	22.7	ASNH 520-617
		SNL 2320 TA	SNL 524-620	TSN 320A	2320	FRB 6.5/215	2	85.6	38.8	ASNH 524-620
		SNL 21320 TA	SNL 524-620	TSN 320A	21320 E	FRB 19.5/215	2	78.7	35.7	ASNH 524-620
		SNL 22220 TG	SNL 520-617	TSN 220G	22220 E	FRB 12/180	2	53.8	24.4	ASNH 520-617
		SNL 22320 TA	SNL 524-620	TSN 320A	22320 E	FRB 6.5/215	2	86.7	39.3	ASNH 524-620
		SNL 23220 TG	SNL 520-617	TSN 220G	23220CC/W33	FRB 4.85/180	2	52.5	23.8	ASNH 520-617
		SNL C2220 TG	SNL 520-617	TSN 220G	C2220*	FRB 12/180	2	50.0	22.7	ASNH 520-617
		SNL C2320 TA	SNL 524-620	TSN 320A	C2320*	FRB 6.5/215	2	85.6	38.8	ASNH 524-620
110	125	SNL 1222 TG	SNL 522-619	TSN 222G	1222	FRB 21/200	2	61.3	27.8	ASNH 522-619
		SNL 2222 TG	SNL 522-619	TSN 222G	2222	FRB 13.5/200	2	65.0	29.5	ASNH 522-619
		SNL 22222 TG	SNL 522-619	TSN 222G	22222 E	FRB 13.5/200	2	64.8	29.4	ASNH 522-619
		SNL 23222 TG	SNL 522-619	TSN 222G	23222CC/W33	FRB 5.1/200	2	70.3	31.9	ASNH 522-619
		SNL C2222 TG	SNL 522-619	TSN 222G	C2222*	FRB 13.5/200	2	65.0	29.5	ASNH 522-619

* Must always be located.

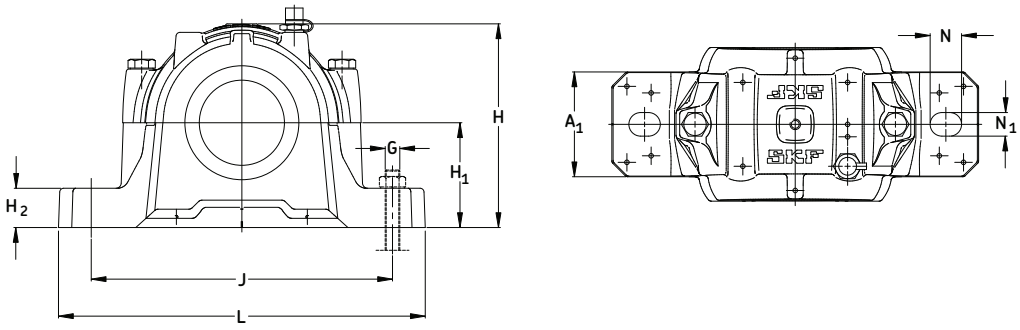

Housing No.	Dimensions													Bolts (2 req'd)
	A	A_1	A_2	A_3	H	H_1	H_2	J_{max}	J_{min}	J	L	N	N_1	G
	in/mm													
SNL 218	5 1/2	3 15/16	6 1/4	8 11/16	7 5/8	3.937	1 3/8	11 5/8	11 1/4	11 7/16	13 5/8	1 1/8	7/8	3/4
	140	100	158	220	194	100	35	295	285	290	345	28	22	20
SNL 520-617	6 5/16	4 5/16	7	8 11/16	8 9/16	4.409	1 9/16	12 13/16	12 3/8	12 5/8	15	1 1/4	1 1/32	1
	160	110	178	220	218	112	40	326	314	320	380	32	26	24
SNL 522-619	6 15/16	4 3/4	7 9/16	10	9 1/2	4.921	1 3/4	14	13 9/16	13 11/16	16 1/8	1 1/4	1 1/32	1
	175	120	191	255	242	125	45	356	344	350	410	32	26	24
SNL 524-620	7 5/16	4 3/4	7 7/8	10 1/4	10 11/16	5.512	1 3/4	14	13 9/16	13 11/16	16 1/8	1 1/4	1 1/32	1
	185	120	199	260	271	140	45	356	344	350	410	32	26	24

For an example on how to order, please see page 91.

SNL - Cylindrical Bore Mounting
Series SNL 200 and SNL 300
Pillow blocks of cast iron for bearings with cylindrical bore mounting, grease or oil lubrication
d_a 120 - 160 mm
d_b 135 - 175 mm

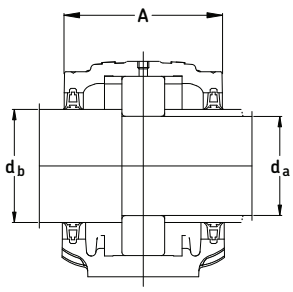

Double-lip seals
G & L design

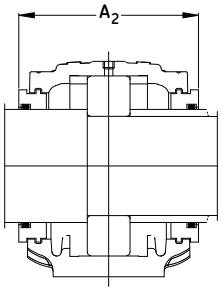

Labyrinth seals
S design

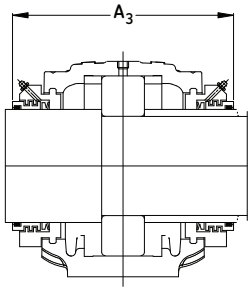

Taconite seals
ND design

Shaft Dia. d_a/d_b		Complete Pillow Block Assembly	Housing	Standard Seal Package	Bearing	Fixing Rings	Qty.	Mass Complete		End Cover
mm								lb.	kg.	
120	135	SNL 1224 TG	SNL 524-620	TSN 224G	1224	FRB 22/215	2	74.3	33.7	ASNH 524-620
		SNL 22224 TG	SNL 524-620	TSN 224G	22224 E	FRB 14/215	2	78.3	35.5	ASNH 524-620
		SNL 23224 TG	SNL 524-620	TSN 224G	23224CC/W33	FRB 5/215	2	84.7	38.4	ASNH 524-620
		SNL C3224 TG	SNL 524-620	TSN 224G	C3224*	FRB 5/215	2	84.7	38.4	ASNH 524-620
130	145	SNL 1226 TG	SNL 526	TSN 226G	1226	FRB 22/230	2	93.0	42.2	ASNH 526
		SNL 22226 TG	SNL 526	TSN 226G	22226 E	FRB 13/230	2	99.0	44.9	ASNH 526
		SNL 23226 TG	SNL 526	TSN 226G	23226CC/W33	FRB 5/230	2	104	47.2	ASNH 526
		SNL C2226 TG	SNL 526	TSN 226G	C2226*	FRB 13/230	2	100	45.4	ASNH 526
140	155	SNL 22228 TG	SNL 528	TSN 228G	22228CC/W33	FRB 15/250	2	121	54.7	ASNH 528
		SNL 23228 TG	SNL 528	TSN 228G	23228CC/W33	FRB 5/250	2	129	58.7	ASNH 528
		SNL C2228 TG	SNL 528	TSN 228G	C2228*	FRB 15/250	2	129	58.7	ASNH 528
150	165	SNL 22230 TG	SNL 530	TSN 230G	22230CC/W33	FRB 16.5/270	2	149	67.8	ASNH 530
		SNL 23230 TG	SNL 530	TSN 230G	23230CC/W33	FRB 5/270	2	161	73.2	ASNH 530
		SNL C2230 TG	SNL 530	TSN 230G	C2230*	FRB 16.5/270	2	161	73.2	ASNH 530
160	175	SNL 22232 TG	SNL 532	TSN 232G	22232CC/W33	FRB 17/290	2	173	78.4	ASNH 532
		SNL 23232 TG	SNL 532	TSN 232G	23232CC/W33	FRB 5/290	2	188	85.3	ASNH 532
		SNL C3232 TG	SNL 532	TSN 232G	C3232*	FRB 5/290	2	188	85.3	ASNH 532

* Must always be located.

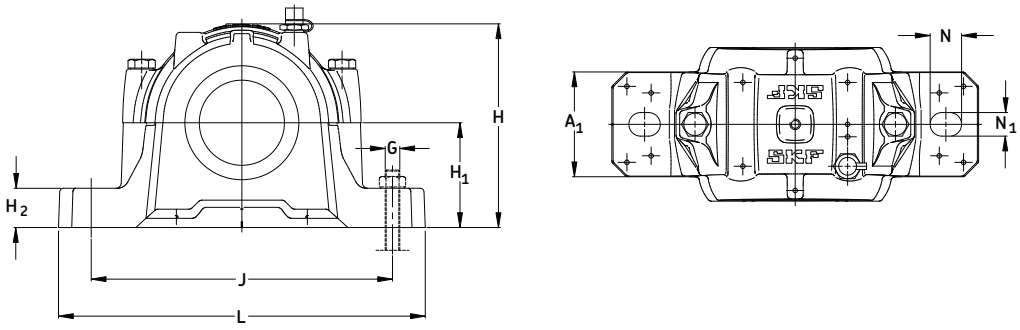

Housing No.	Dimensions													Bolts (2 req'd)
	A	A_1	A_2	A_3	H	H_1	H_2	J_{max}	J_{min}	J	L	N	N_1	G
	in/mm													
SNL 524-620	7 5/16	4 3/4	7 7/8	10 1/4	10 11/16	5.512	1 3/4	14	13 9/16	13 11/16	16 1/8	1 1/4	1	1
	185	120	199	260	271	140	45	356	344	350	410	32	26	24
SNL 526	7 1/2	5 1/8	8 3/16	10 7/16	11 7/16	5.906	2	15 1/4	14 11/16	15	17 9/16	1 3/8	1 1/8	1
	190	130	208	265	290	150	50	387	373	380	445	35	28	24
SNL 528	8 1/8	5 15/16	8 13/16	11 7/16	11 15/16	5.906	2	16 3/4	16 15/16	16 9/16	19 11/16	1 11/16	1 3/8	1 1/4
	205	150	223	290	302	150	50	427	413	420	500	42	35	30
SNL 530	8 11/16	6 5/16	9 1/2	12	12 3/4	6.299	2 3/8	17 15/16	17 1/2	17 3/4	20 7/8	1 11/16	1 3/8	1 1/4
	220	160	241	305	323	160	60	457	443	450	530	42	35	30
SNL 532	9 1/4	6 5/16	10	12 5/8	13 9/16	6.693	2 3/8	18 3/4	18 1/4	18 1/2	21 11/16	1 11/16	1 3/8	1 1/4
	235	160	254	320	344	170	60	477	463	470	550	42	35	30

For an example on how to order, please see page 91.

Housings for four-bolt mounting

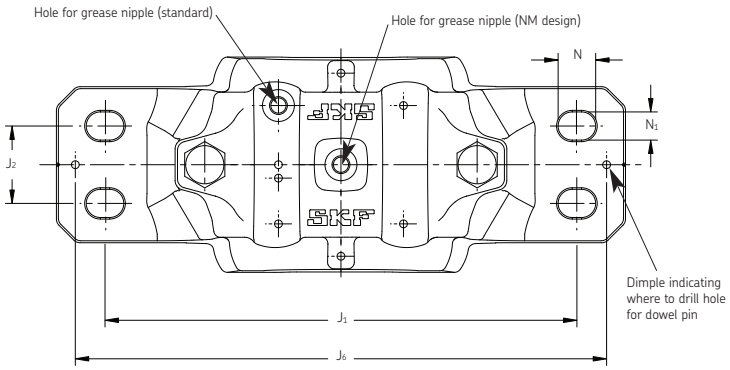

Housing Size	Dimensions N	N_1	J_1	J_2	J_6
-					
	mm				
FSNL 511-609 NM	20	15	210	35	234
FSNL 513-611 NM	20	15	230	40	252
FSNL 515-612 NM	20	15	230	40	257
FSNL 516-613 NM	24	18	260	50	288
FSNL 517 NM	24	18	260	50	292
FSNL 518-615 NM	24	18	290	50	317
FSNL 520-617 NM	24	18	320	60	348
FSNL 522-619 NM	24	18	350	70	378
FSNL 524-620 NM	24	18	350	70	378
FSNL 526 NM	28	22	380	70	414
FSNL 528 NM	32	26	420	80	458
FSNL 530 NM	32	26	450	90	486
FSNL 532 NM	32	26	470	90	506

Some housings which are already prepared for four-bolt mounting having 4 cast holes in the base can be supplied. These housings are also prepared for relubrication of the bearing via the outer ring (suffix NM) as standard. The housings are designated FSNL .. NM e.g. FSNL 511-609 NM.

Notes

Pillow Block Housings

SNL, SSNLD

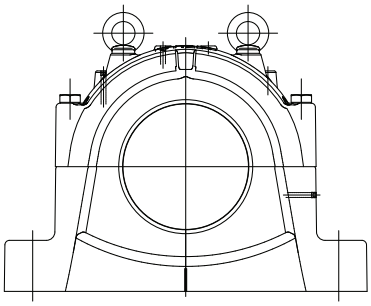

MATERIAL	SNL: cast iron EN-GJL-250 to EN 1561:1992 SSNLD: Ductile iron EN-GJS-400 to EN 1563:1997	
BEARING SERIES USED	230CCK, 231CCK, 232CCK, C 22K, C 30K, C 31K, C 32K	
SHAFT SIZE RANGE	5-15/16" to 13-15/16"	115mm to 500mm
PILLOW BLOCK SIZE	3038 - 30/530 (adapter mounting) 3134 - 3196 (adapter mounting) 3234 - 3288 (adapter mounting)	
PILLOW BLOCK LUBRICATION	Grease or Oil	
STANDARD SEALS	TS 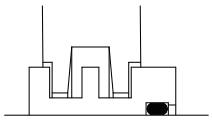	
OPTIONAL SEALS	TNF 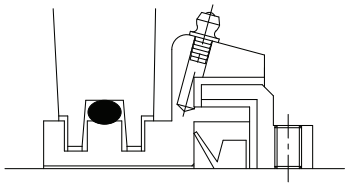	

SNL 3000, 3100 and 3200 Split Pillow Blocks Nomenclature Adapter Mounting

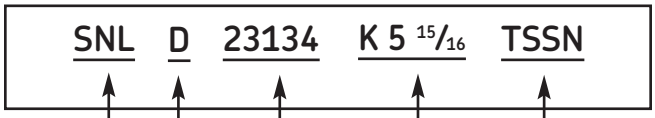

Base Design

Standard with a four bolt base

Material

~~0~~ Cast iron (standard)

D Ductile iron

Size

Bearing bore: 34 = 170 mm

Adapter mount

Shaft size: 5 15/16"

Suffixes

~~0~~	Standard TS triple ring seal
H	Held or fixed unit c/w fixing rings
T	Drilled and tapped with one 1/8-27" NPSF hole at the locknut side of the cap to take the included AH 1/8-27" PTF grease fitting
TD	Drilled and tapped with one 1/8-27" NPSF hole on each side of the cap to take the included AH 1/8-27" PTF grease fittings
TNF	Housing with taconite seal (1/pkg)
TS	Housing with labyrinth seal (1/pkg)
SN	Housing drilled and tapped for a sensor (hole size and thread configuration to be specified by the customer)
TURT	Modified housing, including oil seals for use with a spherical roller bearing
TURA	Modified housing, including oil seals for use with a CARB
Y	Housing with an end cover ("A" suffix used in European catalogues)

How to order SNL (example):

When you order a SNL 23134K/5 15/16" you will receive a package containing the following:

1 - Pillow block housing SNL 3134
1 - Triple ring seals TS 34/5 15/16"
1 - Bearing SKF 23134CCK/W33
1 - Adapter sleeve HA 3134 for shaft diameter 5 15/16"

If a "HELD" or "FIXED" unit is required, add the suffix "H" and two FRB 10/280 fixing rings will be included. Only one bearing per shaft should be held. CARB displace internally and are therefore always "FREE", however, they must always be located in the housing with fixing rings, as does a true "FIXED" bearing.
If a unit with one end closed is required, add the suffix "Y" and one ETS 34 end cover will be included.

Series SNL 3000, 3100 and 3200 Pillow blocks for bearings on adapter sleeves, grease or oil lubrication
d_a 5 15/16 - 6 1/2 in (150 - 160 mm)

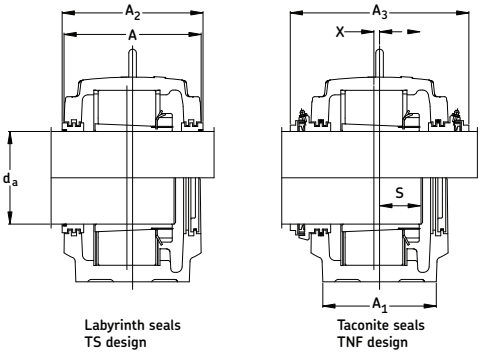

Labyrinth seals TS design

Taconite seals TNF design

Shaft Dia.		Complete Pillow Block Assembly	Housing	Seal	Bearing	Adapter Sleeve	Fixing Rings	Qty.	Mass Complete		End Cover
mm	in								lb.	kg.	
150		SNL 23134K/150	SNL3134	TS34	23134CCK/W33	H 3134	FRB 10/280	2	212	96.1	ETS34
		SNL C3134K/150	SNL3134	TS34	C3134K *	H 3134L	FRB 10/280	2	210	95.1	ETS34
		SNL 23234K/150	SNL3234	TS40/150	23234CCK/W33	H 2334	FRB 6/310	2	329	149	ETS40
	5 15/16	SNL 23134K/5 15/16	SNL3134	TS34/5 15/16	23134CCK/W33	HA 3134	FRB 10/280	2	207	94	ETS34
		SNLC3134K/5 15/16	SNL3134	TS34/5 15/16	C3134K*	HA 3134L	FRB 10/280	2	207	94	ETS34
		SNL 23234K/5 15/16	SNL3234	TS40/5 15/16	23234CCK/W33	HA 2334	FRB 6/310	2	329	149	ETS40
	6	SNL 23134K/6	SNL3134	TS34/6	23134CCK/W33	HE 3134	FRB 10/280	2	207	94	ETS34
160		SNL 23036K/160	SNL3036	TS36	23036CCK/W33	H 3036	FRB 17/280	2	214	97	ETS36
		SNL C3036K/160	SNL3036	TS36	C3036K*	H 3036	FRB 17/280	2	214	97	ETS36
		SNL 23136K/160	SNL3136	TS36	23136CCK/W33	H 3136	FRB 10/300	2	245	111	ETS36
		SNL C3136K/160	SNL3136	TS36	C3136K*	H 3136L	FRB 10/300	2	240	109	ETS36
		SNL 23236K/160	SNL3236	TS38/160	23236CCK/W33	H 2336	FRB 6/320	2	335	152	ETS38
	6 7/16	SNL 23036K/6 7/16	SNL3036	TS36/6 7/16	23036CCK/W33	HA 3036	FRB 17/280	2	214	97	ETS36
		SNL C3036K/6 7/16	SNL3036	TS36/6 7/16	C3036K*	HA 3036	FRB 17/280	2	214	97	ETS36
		SNL 23136K/6 7/16	SNL3136	TS36/6 7/16	23136CCK/W33	HA 3136	FRB 10/300	2	245	111	ETS36
		SNL C3136K/6 7/16	SNL3136	TS36/6 7/16	C3136K*	HA 3136L	FRB 10/300	2	240	109	ETS36
		SNL 23236K/6 7/16	SNL3236	TS38/6 7/16	23236CCK/W33	HA 2336	FRB 6/320	2	335	152	ETS38
	6 1/2	SNL 23036K/6 1/2	SNL3036	TS36/6 1/2	23036CCK/W33	HE 3036	FRB 17/280	2	214	97	ETS36
		SNL C3036K/6 1/2	SNL3036	TS36/6 1/2	C3036K*	HE 3036	FRB 17/280	2	214	97	ETS36
		SNL 23136K/6 1/2	SNL3136	TS36/6 1/2	23136CCK/W33	HE 3136	FRB 10/300	2	245	111	ETS36
		SNL C3136K/6 1/2	SNL3136	TS36/6 1/2	C3136K*	HE 3136L	FRB 10/300	2	240	109	ETS36

* Must always be located.

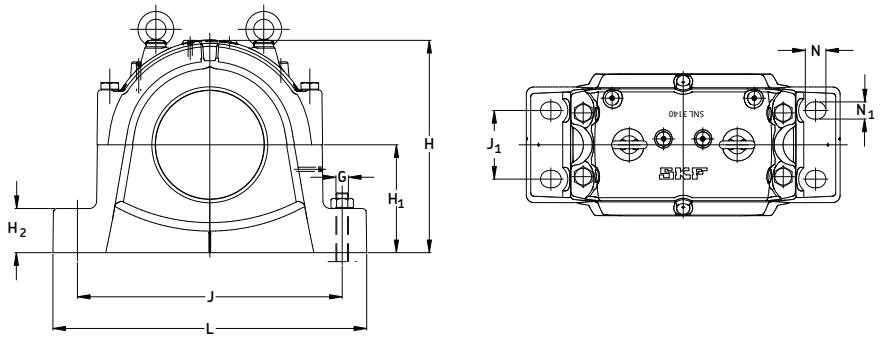

Housing No.	Dimensions												Bolts (2 req'd)
	A	A_1	A_2	A_3	X	H	H_1	H_2	L	J	J_1	S*	G
	in/mm												
SNL 3134	9.06 230	7.09 180	9.45 240	11.81 300	0.55 14	13.11 333	6.693 170	2.76 70	20.08 510	16.93 430	3.94 100	3.54 90	1 24
SNL 3234	10.24 260	8.27 210	10.63 270	13.19 335	0.39 10	14.76 375	7.48 190	3.15 80	22.05 560	18.90 480	4.72 120	3.74 95	1 24
SNL 3036	9.06 230	7.09 180	9.45 240	12.20 310	0.55 14	13.11 333	6.69 170	2.76 70	20.08 510	16.93 430	3.94 100	3.43 87	1 24
SNL 3136	9.45 240	7.48 190	9.84 250	12.40 315	0.59 15	14 353	7.087 180	3 75	20.87 530	17.72 450	4.33 110	3.74 95	1 24
SNL 3236	10.24 260	8.27 210	10.63 270	13.19 335	0.39 10	14.76 375	7.48 190	3.15 80	22.05 560	18.90 480	4.72 120	5.87 149	1 24

For an example on how to order, please see page 107.

***NOTE:** Dimension "S" indicates the shaft length from the centre of the bearing to the end of the shaft for housings with one end closed.

Series SNL 3000, 3100 and 3200 Pillow blocks for bearings on adapter sleeves, grease or oil lubrication
d_a 6 15/16 - 7 3/16 in (170 - 180 mm)

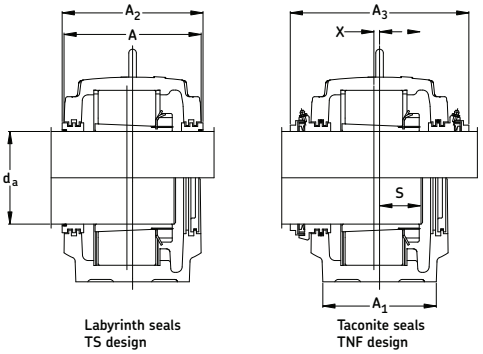

Labyrinth seals TS design

Taconite seals TNF design

Shaft Dia.		Complete Pillow Block Assembly	Housing	Seal	Bearing	Adapter Sleeve	Fixing Rings	Qty.	Mass Complete		End Cover
mm	in								lb.	kg.	
170		SNL 23038K/170	SNL3038	TS38	23038CCK/W33	H 3038	FRB 10/290	4	236	107	ETS38
		SNL C3038K/170	SNL3038	TS38	C3038K*	H 3038	FRB 10/290	4	236	107	ETS38
		SNL 23138K/170	SNL3138	TS38	23138CCK/W33	H 3138	FRB 10/320	2	304	138	ETS38
		SNL C3138K/170	SNL3138	TS38	C3138K*	H 3138L	FRB 10/320	2	301	136.5	ETS38
		SNL 23238K/170	SNL3238	TS40/170	23238CCK/W33	H 2338	FRB 6/340	2	412	187	ETS40
	6 15/16	SNL 23038K/6 15/16	SNL3038	TS38/6 15/16	23038CCK/W33	HA 3038	FRB 10/290	4	236	107	ETS38
		SNL C3038K/6 15/16	SNL3038	TS38/6 15/16	C3038K*	HA 3038	FRB 10/290	4	236	107	ETS38
		SNL 23138K/6 15/16	SNL3138	TS38/6 15/16	23138CCK/W33	HA 3138	FRB 10/320	2	304	138	ETS38
		SNL C3138K/6 15/16	SNL3138	TS38/6 15/16	C3138K*	HA 3138L	FRB 10/320	2	300	136	ETS38
		SNL 23238K/6 15/16	SNL3238	TS40/6 15/16	23238CCK/W33	HA 2338	FRB 6/340	2	412	187	ETS40
180		SNL 23040K/180	SNL3040	TS40	23040CCK/W33	H 3040	FRB 10/310	4	295	134	ETS40
		SNL C3040K/180	SNL3040	TS40	C3040K*	H 3040	FRB 10/310	4	295	134	ETS40
		SNL 23140K/180	SNL3140	TS40	23140CCK/W33	H 3140	FRB 10/340	2	379	172	ETS40
		SNL C3140K/180	SNL3140	TS40	C3140K*	H 3140	FRB 10/340	2	373	169	ETS40
		SNL 23240K/180	SNL3240	TS48/180	23240CCK/W33	H 2340	FRB 6/360	2	474	215	ETS48
	7 3/16	SNL 23040K/7 3/16	SNL3040	TS40/7 3/16	23040CCK/W33	HA 3040	FRB 10/310	4	295	134	ETS40
		SNL C3040K/7 3/16	SNL3040	TS40/7 3/16	C3040K*	HA 3040	FRB 10/310	4	295	134	ETS40
		SNL 23140K/7 3/16	SNL3140	TS40/7 3/16	23140CCK/W33	HA 3140	FRB 10/340	2	379	172	ETS40
		SNL C3140K/7 3/16	SNL3140	TS40/7 3/16	C3140K*	HA 3140	FRB 10/340	2	373	169	ETS40
		SNL 23240K/7 3/16	SNL 3240	TS 48/7 3/16	23240CCK/W33	HA 2340	FRB 6/360	2	474	215	ETS48

* Must always be located.

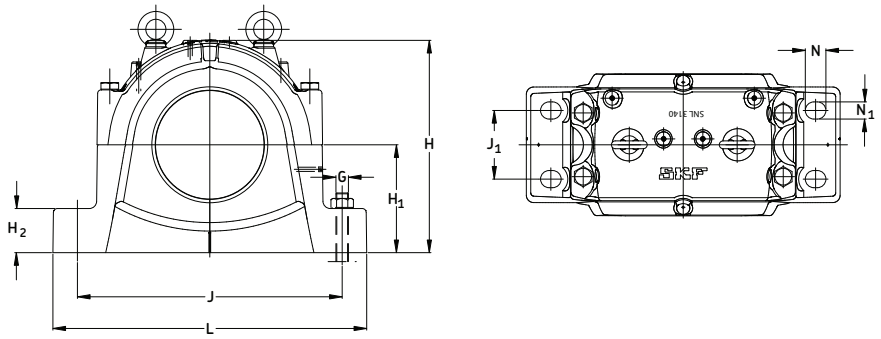

Housing No.	Dimensions												Bolts (2 req'd)
	A	A_1	A_2	A_3	X	H	H_1	H_2	L	J	J_1	S*	G
	in/mm												
SNL 3038	9.45 240	7.48 190	9.84 250	12.40 315	0.59 15	13.90 353	7.09 180	2.95 75	20.87 530	17.72 450	4.33 110	5.00 127	1 24
SNL 3138	10.24 260	8.27 210	10.63 270	13.19 335	0.39 10	14.76 375	7.480 190	3.15 80	22.05 560	18.90 480	4.72 120	3.94 100	1 24
SNL 3238	11.02 280	9.06 230	11.42 290	13.98 355	0.39 10	16.18 411	8.27 210	3.35 85	24.02 610	20.08 510	5.12 130	4.29 109	1 ¼ 30
SNL 3040	10.24 260	8.27 210	10.63 270	13.19 335	0.39 10	14.76 375	7.48 190	3.15 80	22.05 560	18.90 480	4.72 120	3.74 95	1 24
SNL 3140	11 280	9.06 230	11.42 290	13.98 355	0.39 10	16.18 411	8.268 210	3.35 85	24 610	20.08 510	5.12 130	4.25 108	1 ¼ 30
SNL 3240	11.42 290	9.45 240	11.81 300	14.96 380	0.47 12	17.09 434	8.66 220	3.54 90	25.20 640	21.26 540	5.51 140	4.53 115	1 ¼ 30

For an example on how to order, please see page 107.

***NOTE:** Dimension "S" indicates the shaft length from the centre of the bearing to the end of the shaft for housings with one end closed.

Series SNL 3000, 3100 and 3200 Pillow blocks for bearings on adapter sleeves, grease or oil lubrication
d_a 9 7/16 in (200 - 240 mm)

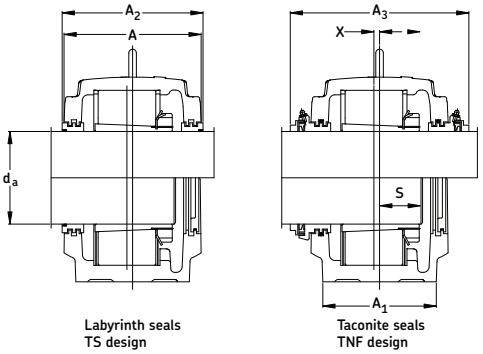

Labyrinth seals
TS design

Taconite seals
TNF design

Shaft Dia.		Complete Pillow Block Assembly	Housing	Seal	Bearing	Adapter Sleeve	Fixing Rings	Qty.	Mass Complete		End Cover
mm	in								lb.	kg.	
200		SNL 23044K/200	SNL3044	TS44	23044CCK/W33	OH 3044H	FRB 10/340	4	370	168	ETS44
		SNL C3044K/200	SNL3044	TS44	C3044K*	OH 3044H	FRB 10/340	4	370	168	ETS44
		SNL 23144K/200	SNL3144	TS44	23144CCK/W33	OH 3144H	FRB 10/370	2	450	204	ETS44
		SNL C3144K/200	SNL3144	TS44	C3144K*	OH 3144HTL	FRB 10/370	2	201	21	ETS44
		SNL 23244K/200	SNL3244	TS48/200	23244CCK/W33	OH 2344H	FRB 10/400	2	637	289	ETS48
220		SNL 23048K/220	SNL3048	TS48	23048CCK/W33	OH 3048H	FRB 12/360	4	417	189	ETS48
		SNL C3048K/220	SNL3048	TS48	C3048K*	OH 3048H	FRB 12/360	4	417	189	ETS48
		SNL 23148K/220	SNL3148	TS48	23148CCK/W33	OH 3148H	FRB 10/400	2	576	261	ETS48
		SNL C3148K/220	SNL3148	TS48	C3148K*	OH 3148HTL	FRB 10/400	2	568	257.5	ETS48
		SNL 23248K/220	SNL3248	TS52/220	23248CCK/W33	OH 2348H	FRB 10/440	2	778	353	ETS52
	9 7/16	SNL23052K/9 7/16	SNL3052	TS52/9 7/16	23052CCK/W33	SNP 3052x9 7/16	FRB 22/400	2	560	254	ETS52
240		SNL 23052K/240	SNL3052	TS52	23052CCK/W33	OH 3052H	FRB 22/400	2	560	254	ETS52
		SNL C3052K/240	SNL3052	TS52	C3052K*	OH 3052H	FRB 22/400	2	560	254	ETS52
		SNL 23152K/240	SNL3152	TS52	23152CCK/W33	OH 3152H	FRB 10/440	2	717	325	ETS52
		SNL C3152K/240	SNL3152	TS52	C3152K*	OH 3152HTL	FRB 10/440	2	711	322.5	ETS52
		SNL 23252K/240	SNL3252	TS64/240	23252CCK/W33	OH 2352H	FRB 10/480	2	1034	469	ETS64

* Must always be located.

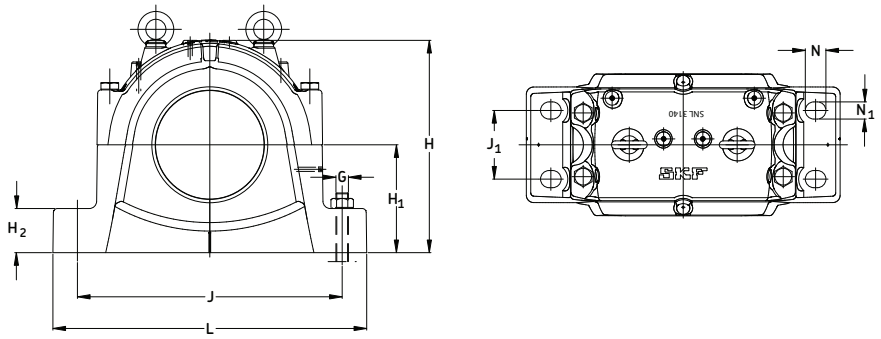

Housing No.	Dimensions												Bolts (2 req'd)
	A	A_1	A_2	A_3	X	H	H_1	H_2	L	J	J_1	S*	G
	in/mm												
SNL 3044	11.02 280	9.06 230	11.42 290	14.17 360	0.39 10	16.18 411	8.27 210	3.35 85	24.02 610	20.08 510	5.12 130	4.21 107	1 ¼ 30
SNL 3144	11.42 290	9.45 240	11.81 300	14.37 365	0.47 12	17.09 434	8.661 220	3.54 90	25.20 640	21.26 540	5.51 140	4.49 114	1 ¼ 30
SNL 3244	12.20 310	10.24 260	12.40 315	15.75 400	0.47 12	18.66 474	9.45 240	3.74 95	27.56 700	23.62 600	5.91 150	4.89 124	1 ¼ 30
SNL 3048	11.42 290	9.45 240	11.81 300	14.96 380	0.47 12	17.09 434	8.66 220	3.54 90	25.20 640	21.26 540	5.51 140	4.45 113	1 ¼ 30
SNL 3148	12.20 310	10.24 260	12.40 315	15.75 400	0.47 12	10.24 474	9.449 240	3.74 95	27.56 700	23.62 600	5.91 150	4.76 121	1 ¼ 30
SNL 3248	12.60 320	11.02 280	12.99 330	16.34 415	0.51 13	20.31 516	10.24 260	3.94 100	30.31 770	25.59 650	6.30 160	5.28 134	1 ½ 36
SNL 3052	12.20 310	10.24 260	12.40 315	15.75 400	27/64 12	18.66 474	9.45 240	3.74 95	27.56 700	23.62 600	5.91 150	4.72 120	1 ¼ 30
SNL 3152	12.60 320	11.02 280	12.99 330	16.34 415	0.51 13	20.31 516	10.24 260	3.94 100	30.31 770	25.59 650	6.30 160	5.16 131	1 ½ 36
SNL 3252	13.78 350	12.20 310	14.17 360	17.52 445	0.87 22	23.27 591	11.81 300	4.33 110	32.68 830	27.95 710	7.48 190	5.94 151	1 ½ 36

For an example on how to order, please see page 107.

***NOTE:** Dimension "S" indicates the shaft length from the centre of the bearing to the end of the shaft for housings with one end closed.

Series SNL 3000, 3100 and 3200 Pillow blocks for bearings on adapter sleeves, grease or oil lubrication
d_a 260 - 320 mm

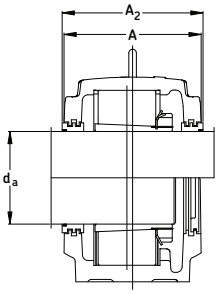

Labyrinth seals
TS design

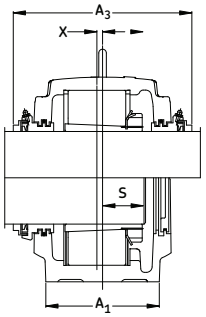

Taconite seals
TNF design

Shaft Dia.	Complete Pillow Block Assembly	Housing	Seal	Bearing	Adapter Sleeve	Fixing Rings	Qty.	Mass Complete		End Cover
mm								lb.	kg.	
260	SNL 23056K/260	SNL3056	TS56	23056CCK/W33	OH 3056H	FRB 10/420	6	650	295	ETS56
	SNL C3056K/260	SNL3056	TS56	C3056K*	OH3056H	FRB 10/420	6	650	295	ETS56
	SNL 23156K/260	SNL3156	TS56	23156CCK/W33	OH3156H	FRB 10/460	2	820	372	ETS56
	SNL C3156K/260	SNL3156	TS56	C3156K*	OH3156HTL	FRB 10/460	2	811	368	ETS56
	SNL 23256K/260	SNL3256	TS60/260	23256CCK/W33	OH2356H	FRB 10/500	2	1045	474	ETS60
280	SNL 23060K/280	SNL3060	TS60	23060CCK/W33	OH3060H	FRB25/460	2	772	350	ETS60
	SNL C3060K/280	SNL3060	TS60	C3060KM*	OH3060H	FRB25/460	2	772	350	ETS60
	SNL 23160K/280	SNL3160	TS60	23160CCK/W33	OH3160H	FRB 10/500	2	1001	454	ETS60
	SNL C3160K/280	SNL3160	TS60	C3160K*	OH3160H	FRB 10/500	2	990	449	ETS60
	SNL 23260K/280	SNL3260	TS64/280	23260CCK/W33	OH3260H	FRB 10/540	2	1228	557	ETS64
300	SNL 23064K/300	SNL3064	TS64	23064CCK/W33	OH 3064H	FRB 10/480	6	895	406	ETS64
	SNL C3064K/300	SNL3064	TS64	C3064KM*	OH 3064H	FRB 10/480	6	895	406	ETS64
	SNL 23164K/300	SNL3164	TS64	23164CCK/W33	OH 3164H	FRB 10/540	2	1175	533	ETS64
	SNL C3164K/300	SNL3164	TS64	C3164K*	OH 3164H	FRB 10/540	2	1164	528	ETS64
	SNL 23264K/300F	SNL3264F	TS68/300	23264CCK/W33	OH 3264H	FIXED HSG**	-	1541	699	ETS68
	SNL 23264K/300L	SNL 3264L	TS68/300	23264CCK/W33	OH 3264H	FREE HSG	-	1535	696	ETS68
320	SNL 23068K/320	SNL3068	TS68	23068CCK/W33	OH3068H	FRB16/520	4	1054	478	ETS68
	SNL C3068K/320	SNL3068	TS68	C3068KM*	OH3068H	FRB16/520	4	1054	478	ETS68
	SNL 23168K/320F	SNL 3168F	TS68	23168CCK/W33	OH3168H	FIXED HSG**	-	1520	689	ETS68
	SNL 23168K/320L	SNL 3168L	TS68	23168CCK/W33	OH3168H	FREE HSG	-	1520	689	ETS68
	SNL C3168K/320F	SNL 3168F	TS68	C3168KM*	OH3168H	FIXED HSG**	-	1520	689	ETS68
	SNL C3168K/320L	SNL 3168L	TS68	C3168KM*	OH3168H	FREE HSG	-	1520	689	ETS68
	SNL 23268K/320F	SNL 3268F	TS76/320	23268CAK/W33	OH3268H	FIXED HSG**	-	1807	819	ETS76
	SNL 23268K/320L	SNL 3268L	TS76/320	23268CAK/W33	OH3268H	FREE HSG	-	1800	816	ETS76

* Must always be located.

** These blocks are manufactured as fixed units, no fixing rings are required.

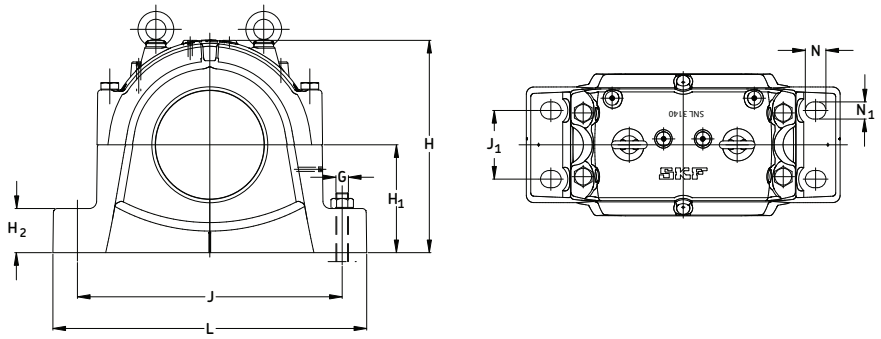

Housing No.	Dimensions												Bolts (2 req'd)
	A	A_1	A_2	A_3	X	H	H_1	H_2	L	J	J_1	S*	G
	in/mm												
SNL 3056	12.60 320	11.02 280	12.99 330	16.34 415	33/64 13	20.31 516	10.24 260	3.94 100	30.31 770	25.59 650	6.30 160	5.00 127	1 ½ 36
SNL 3156	12.60 320	11.02 280	12.99 330	16.34 415	0.63 16	21.69 551	11.02 280	4.13 105	31.10 790	26.38 670	6.30 160	5.28 134	1 ½ 36
SNL 3256	13.78 350	12.20 310	14.17 360	17.52 445	0.87 22	23.27 591	11.81 300	4.33 110	32.68 830	27.95 710	7.48 190	5.98 152	1 ½ 36
SNL 3060	12.60 320	11.02 280	12.99 330	16.34 415	0.63 16	21.69 551	11.02 280	4.13 105	31.10 790	26.38 670	6.30 160	5.28 134	1 ½ 36
SNL 3160	13.78 350	12.20 310	14.17 360	17.52 445	0.87 22	23.27 591	11.81 300	4.33 110	32.68 830	27.95 710	7.48 190	6.06 154	1 ½ 36
SNL 3260	14.57 370	12.99 330	14.96 380	18.31 465	0.91 23	24.84 631	12.60 320	4.53 115	34.65 880	29.53 750	7.87 200	6.61 168	1 ½ 36
SNL 3064	13.78 350	12.20 310	14.17 360	17.52 445	0.87 22	23.27 591	11.81 300	4.33 110	32.68 830	27.95 710	7.48 190	4.75 146	1 ½ 36
SNL 3164	14.57 370	12.99 330	14.96 380	18.31 465	0.91 23	24.84 631	12.60 320	4.53 115	34.65 880	29.53 750	7.87 200	6.50 165	1 ½ 36
SNL 3264	15.75 400	14.17 360	16.14 410	19.49 495	0.94 24	26.57 675	13.39 340	4.72 120	37.40 950	31.89 810	8.66 220	7.13 181	1 ½ 36
SNL 3068	14.57 370	12.99 330	14.96 380	18.31 465	0.91 23	24.84 631	12.60 320	4.53 115.0	34.65 880	29.53 750	7.87 200	6.14 156	1 ½ 36
SNL 3168	15.75 400	14.17 360	16.14 410	19.49 495	0.94 24	26.57 675	13.39 340	4.7 120.0	37.40 950	31.89 810	8.66 220	7.28 185	1 ½ 36
SNL 3268	15.75 400	14.17 360	16.14 410	19.49 495	1.18 30	28.15 715	14.17 360	4.7 120.0	40.94 1040	34.25 870	8.66 220	7.72 196	1 ½ 36

For an example on how to order, please see page 107.

***NOTE:** Dimension "S" indicates the shaft length from the centre of the bearing to the end of the shaft for housings with one end closed.

Series SNL 3000, 3100 and 3200 Pillow blocks for bearings on adapter sleeves, grease or oil lubrication
d_a 340 - 380 mm

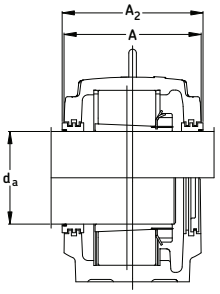

Labyrinth seals
TS design

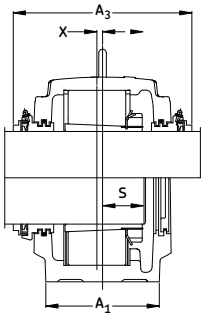

Taconite seals
TNF design

Shaft Dia.	Complete Pillow Block Assembly	Housing	Seal	Bearing	Adapter Sleeve	Fixing Rings	Qty.	Mass Complete		End Cover
mm								lb.	kg.	
340	SNL 23072K/340	SNL 3072	TS72	23072CCK/W33	OH3072H	FRB 16/540	4	1068	484	ETS72
	SNL C3072K/340	SNL 3072	TS72	C3072KM*	OH3072H	FRB 16/540	4	1068	484	ETS72
	SNL 23172K/340F	SNL 3172F	TS72	23172CCK/W33	OH3172H	FIXED HSG**	-	1601	726	ETS72
	SNL 23172K/340L	SNL 3172L	TS72	23172CCK/W33	OH3172H	FREE HSG	-	1601	726	ETS72
	SNL C3172K/340F	SNL 3172F	TS72	C3172KM*	OH3172H	FIXED HSG**	-	1601	726	ETS72
	SNL 23272K/340F	SNL 3272F	TS80/340	23272CAK/W33	OH3272H	FIXED HSG**	-	2171	984	ETS80
	SNL 23272K/340L	SNL 3272L	TS80/340	23272CAK/W33	OH3272H	FREE HSG	-	2164	981	ETS80
360	SNL 23076K/360F	SNL 3076F	TS76	23076CCK/W33	OH3076H	FIXED HSG**	-	1299	589	ETS76
	SNL 23076K/360L	SNL 3076L	TS76	23076CCK/W33	OH3076H	FREE HSG	-	1293	586	ETS76
	SNL C3076K/360F	SNL 3076F	TS76	C3076KM*	OH3076H	FIXED HSG**	-	1293	586	ETS76
	SNL 23176K/360F	SNL 3176F	TS76	23176CAK/W33	OH3176H	FIXED HSG**	-	1681	762	ETS76
	SNL 23176K/360L	SNL 3176L	TS76	23176CAK/W33	OH3176H	FREE HSG	-	1674	759	ETS76
	SNL C3176K/360F	SNL 3176F	TS76	C3176KMB*	OH3176HE	FIXED HSG**	-	1674	759	ETS76
	SNL 23276K/360F	SNL 3276F	TS92/360	23276CAK/W33	OH3276H	FIXED HSG**	-	2534	1149	ETS92
	SNL 23276K/360L	SNL 3276L	TS92/360	23276CAK/W33	OH3276H	FREE HSG	-	2515	1140	ETS92
380	SNL 23080K/380F	SNL 3080F	TS80	23080CCK/W33	OH3080H	FIXED HSG**	-	1432	649	ETS80
	SNL 23080K/380L	SNL 3080L	TS80	23080CCK/W33	OH3080H	FREE HSG	-	1425	646	ETS80
	SNL C3080K/380F	SNL 3080F	TS80	C3080KM*	OH3080H	FIXED HSG**	-	1432	649	ETS80
	SNL 23180K/380F	SNL 3180F	TS80	23180CAK/W33	OH3180H	FIXED HSG**	-	2054	931	ETS80
	SNL 23180K/380L	SNL 3180L	TS80	23180CAK/W33	OH3180H	FREE HSG	-	2047	928	ETS80
	SNL C3180K/380F	SNL 3180F	TS80	C3180KMB*	OH3180HE	FIXED HSG**	-	2054	931	ETS80
	SNL 23280K/380F	SNL 3280F	TS84/380	23280CAK/W33	OH3280H	FIXED HSG**	-	2718	1232	ETS84
	SNL 23280K/380L	SNL 3280L	TS84/380	23280CAK/W33	OH3280H	FREE HSG	-	2702	1225	ETS84

* Must always be located.

** These blocks are manufactured as fixed units, no fixing rings are required.

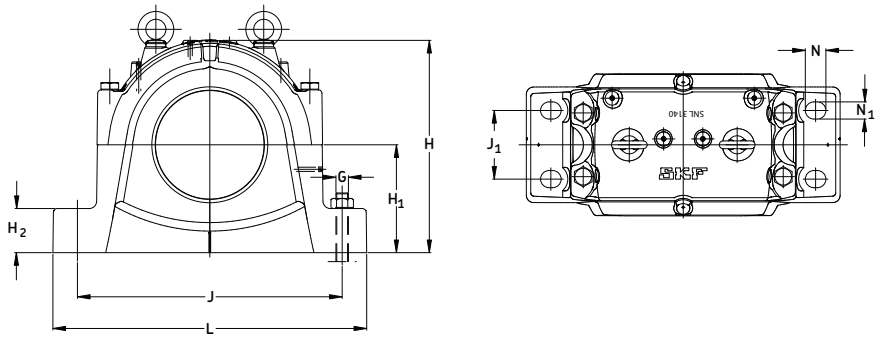

Housing No.	Dimensions												Bolts (2 req'd)
	A	A_1	A_2	A_3	X	H	H_1	H_2	L	J	J_1	S*	G
	in/mm												
SNL 3072	14.57 370	12.99 330	14.96 380	18.31 465	0.91 23	24.84 631	12.60 320	4.5 115.0	34.65 880	29.53 750	7.87 200	6.14 156	1 ½ 36
SNL 3172	15.75 400	14.17 360	16.14 410	19.49 495	1.18 30	27.36 695	13.78 350	4.7 120.0	39.37 1000	33.07 840	8.66 220	7.48 190	1 ½ 36
SNL 3272	16.93 430	15.35 390	17.32 440	20.47 520	1.18 30	30.51 775	14.96 380	4.9 125.0	44.09 1120	37.40 950	9.45 240	8.15 207	- 42
SNL 3076	15.75 400	14.17 360	16.14 410	19.49 495	0.94 24	26.57 675	13.39 340	4.7 120.0	37.40 950	31.89 810	8.66 220	6.46 164	1 ½ 36
SNL 3176	15.75 400	14.17 360	16.14 410	19.49 495	1.18 30	28.15 715	14.17 360	4.7 120.0	40.94 1040	34.25 870	8.66 220	7.52 191	1 ½ 36
SNL 3276	18.11 460	16.54 420	18.50 470	21.85 555	1.38 35	31.89 810	16.14 410	5.1 130.0	46.06 1170	39.37 1000	10.24 260	8.66 220	- 42
SNL 3080	15.75 400	14.17 360	16.14 410	19.49 495	1.18 30	27.36 695	13.78 350	4.7 120.0	39.37 1000	33.07 840	8.66 220	6.85 174	1 ½ 36
SNL 3180	16.93 430	15.35 390	17.32 440	20.67 525	1.18 30	30.51 775	14.96 380	4.9 125.0	44.09 1120	37.40 950	9.45 240	7.99 203	- 42
SNL 3280	18.11 460	16.54 420	18.50 470	21.85 555	1.38 35	31.89 810	16.14 410	5.1 130.0	46.06 1170	39.37 1000	10.24 260	8.94 227	- 42

For an example on how to order, please see page 107.

***NOTE:** Dimension "S" indicates the shaft length from the centre of the bearing to the end of the shaft for housings with one end closed.

Series SNL 3000, 3100 and 3200 Pillow blocks for bearings on adapter sleeves, grease or oil lubrication
d_a 400 - 450 mm

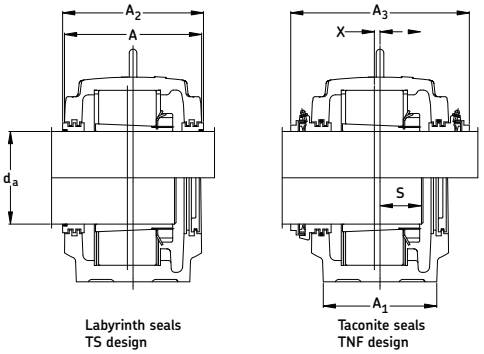

Labyrinth seals
TS design

Taconite seals
TNF design

Shaft Dia.	Complete Pillow Block Assembly	Housing	Seal	Bearing	Adapter Sleeve	Fixing Rings	Qty.	Mass Complete		End Cover
mm								lb.	kg.	
400	SNL 23084K/400F	SNL 3084F	TS84	23084CAK/W33	OH3084H	FIXED HSG**	-	1486	674	ETS84
	SNL 23084K/400L	SNL 3084L	TS84	23084CAK/W33	OH3084H	FREE HSG	-	1486	674	ETS84
	SNLC3084K/400F	SNL 3084F	TS84	C3084KM*	OH3084H	FIXED HSG**	-	1486	674	ETS84
	SNL 23184K/400F	SNL 3184F	TS84	23184CKJ/W33	OH3184H	FIXED HSG**	-	2507	1137	ETS84
	SNL 23184K/400L	SNL 3184L	TS84	23184CKJ/W33	OH3184H	FREE HSG	-	2507	1137	ETS84
	SNL C3184K/400F	SNL 3184F	TS84	C3184KM*	OH3184H	FIXED HSG**	-	2507	1137	ETS84
	SNL 23284K/400F	SNL 3284F	TS92/400	23284CAK/W33	OH3284H	FIXED HSG**	-	3149	1428	ETS92
	SNL 23284K/400L	SNL 3284L	TS92/400	23284CAK/W33	OH3284H	FREE HSG	-	3136	1422	ETS92
410	SNL 23088K/410F	SNL 3088F	TS88	23088CAK/W33	OH3088H	FIXED HSG**	-	1859	843	ETS88
	SNL 23088K/410L	SNL 3088L	TS88	23088CAK/W33	OH3088H	FREE HSG	-	1852	840	ETS88
	SNL 23188K/410F	SNL 3188F	TS88	23188CAK/W33	OH3188H	FIXED HSG**	-	2642	1198	ETS88
	SNL 23188K/410L	SNL 3188L	TS88	23188CAK/W33	OH3188H	FREE HSG	-	2633	1194	ETS88
	SNL C3188K/410F	SNL 3188F	TS88	C3188KMB*	OH3188HE	FIXED HSG**	-	2642	1198	ETS88
	SNL 23288K/410F	SNL 3288F	TS96/410	23288CAK/W33	OH3288H	FIXED HSG**	-	2088	947	ETS96
	SNL 23288K/410L	SNL 3288L	TS96/410	23288CAK/W33	OH3288H	FREE HSG	-	2075	941	ETS96
430	SNL 23092K/430F	SNL 3092F	TS92	23092CAK/W33	OH3092H	FIXED HSG**	-	2192	994	ETS92
	SNL 23092K/430L	SNL 3092L	TS92	23092CAK/W33	OH3092H	FREE HSG	-	2185	991	ETS92
	SNL 23192K/430F	SNL 3192F	TS92	23192CAK/W33	OH3192H	FIXED HSG**	-	3105	1408	ETS92
	SNL 23192K/430L	SNL 3192L	TS92	23192CAK/W33	OH3192H	FREE HSG	-	3096	1404	ETS92
	SNL C3192K/430F	SNL 3192F	TS92	C3192KM*	OH3192H	FIXED HSG**	-	3105	1408	ETS92
450	SNL 23096K/450F	SNL 3096F	TS96	23096CAK/W33	OH3096H	FIXED HSG**	-	2216	1005	ETS96
	SNL 23096K/450L	SNL 3096L	TS96	23096CAK/W33	OH3096H	FREE HSG	-	2207	1001	ETS96
	SNL 23196K/450F	SNL 3196F	TS96	23196CAK/W33	OH3196H	FIXED HSG**	-	3420	1551	ETS96
	SNL 23196K/450L	SNL 3196L	TS96	23196CAK/W33	OH3196H	FREE HSG	-	3411	1547	ETS96
	SNL C3196K/450F	SNL 3196F	TS96	C3196KMB*	OH3196HE	FIXED HSG**	-	3420	1551	ETS96

* Must always be located.

** These blocks are manufactured as fixed units, no fixing rings are required.

Large SNL Pillow Blocks of the 3000, 3100 and 3200 series

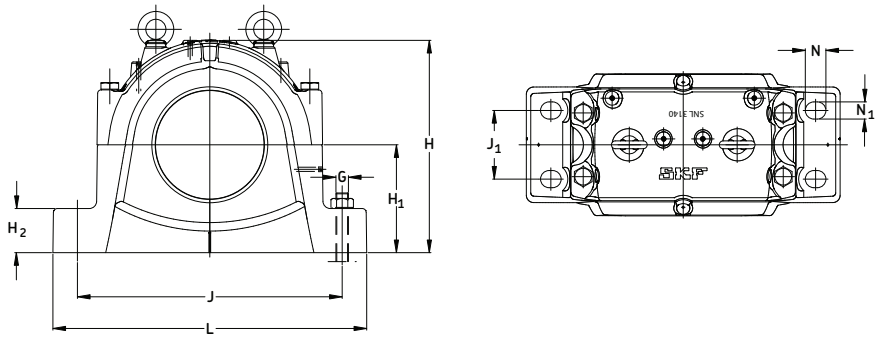

Housing No.	Dimensions												Bolts (2 req'd)
	A	A_1	A_2	A_3	X	H	H_1	H_2	L	J	J_1	S*	G
	in/mm												
SNL 3084	15.75 400	14.17 360	16.14 410	19.49 495	1.18 30	28.15 715	14.17 360	4.72 120	40.94 1040	34.25 870	8.66 220	6.89 175	1 ½ 36
SNL 3184	18.11 460	16.54 420	18.50 470	21.85 555	1.38 35	31.89 810	16.14 410	5.12 130	46.06 1170	39.37 1000	10.24 260	8.78 223	- 42
SNL 3284	18.50 470	17.32 440	18.90 480	22.24 565	1.38 35	34.65 880	17.32 440	5.71 145	50.39 1280	42.13 1070	10.24 260	9.33 237	- 42
SNL 3088	16.93 430	15.35 390	17.32 440	20.67 525	1.18 30	30.51 775	14.96 380	4.92 125	44.09 1120	37.40 950	9.45 240	7.48 190	- 42
SNL 3188	18.11 460	16.93 430	18.50 470	21.85 555	1.38 35	32.87 835	16.54 420	5.31 135	48.03 1220	40.55 1030	10.24 260	8.79 223	- 42
SNL 3288	18.50 470	17.32 440	18.90 480	22.24 565	1.38 35	36.22 920	18.11 460	6.10 155	52.36 1330	43.70 1110	10.24 260	9.41 239	- 48
SNL 3092	18.11 460	16.54 420	18.50 470	21.85 555	1.38 35	31.89 810	16.14 410	5.12 130	46.06 1170	39.37 1000	10.24 260	7.91 201	- 42
SNL 3192	18.50 470	17.32 440	18.90 480	22.24 565	1.38 35	34.65 880	17.32 440	5.71 145	50.39 1280	42.13 1070	10.24 260	9.13 232	- 42
SNL 3096	18.11 460	16.54 420	18.50 470	21.85 555	1.38 35	31.89 810	16.14 410	5.12 130	46.06 1170	39.37 1000	10.24 260	7.91 201	- 42
SNL 3196	18.50 470	17.32 440	18.90 480	22.24 565	1.38 35	36.22 920	18.11 460	6.10 155	52.36 1330	43.70 1110	10.24 260	9.21 234	- 48

For an example on how to order, please see page 107.

***NOTE:** Dimension "S" indicates the shaft length from the centre of the bearing to the end of the shaft for housings with one end closed.

Pillow Block Housings

SAFD, FSAFD

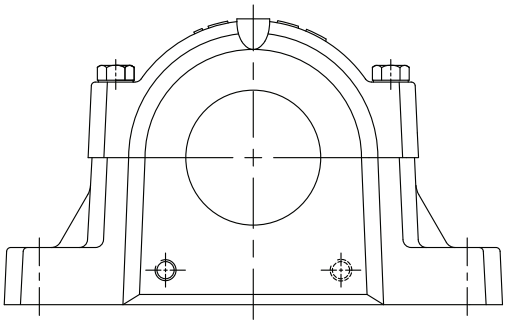

MATERIAL	Ductile Iron ASTM A536 grade 65-45-12	
BEARING SERIES USED	12K, 12EK, 22K, 22EK, 222CCK, 222EK, 232CCK	
SHAFT SIZE RANGE	1-7/16" to 8"	50mm to 200mm
PILLOW BLOCK SIZE	509 - 544 (adapter mounting)	
PILLOW BLOCK LUBRICATION	Grease or Oil	
STANDARD SEALS	LER 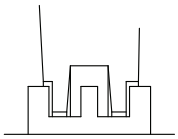	LOR & LORP 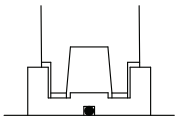
OPTIONAL SEALS	LOR + Contact element B-10724-xxx or B-10785-xxx 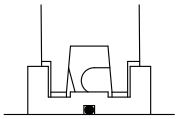	TER-C 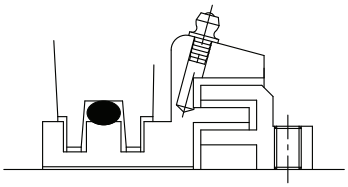
	TER-CV 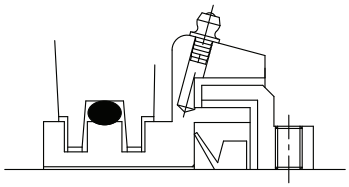	
	TSNC-E & TSAF-E 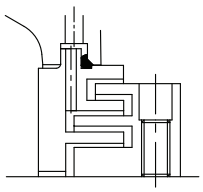	TSNC-D & TSAF -D 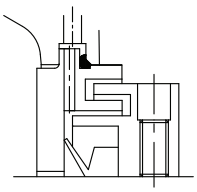

Note : SAFD & FSAFD pillow blocks must be modified to MC14 when using TSNC-D & E type seals for sizes 520 through 532, and TSAF-D & E for sizes 515-518. For smaller sizes, TSNC-D & E and TSAF-D & E are not available.
Consult SKF for availability of metric LOR & LORC type seals.

SAFD Split Pillow Blocks Nomenclature Adapter Mounting

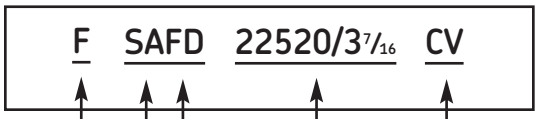

Base

~~0~~	Two bolt
F**	Four bolt

Basic Design

Material

D	Ductile iron

Size

Bearing size: 20 = 100mm
Shaft size: 3 7/16"

Suffixes

~~0~~	Standard triple LER/LOR triple ring seals (included)*
C	Taconite service seal TER..C of Canadian design (1/pkg)
CV	Taconite service seal TER..CV of Canadian design c/w V ring (1/pkg)
D	Purgeable labyrinth seal TSNC..D c/w V ring (1/pkg)
E	Purgeable labyrinth seal TSNC..E without V ring (1/pkg)
H	Held bearing c/w fixing rings
K7	Tighter housing fit, can be used with CARB® bearings for high speeds or vibration
M	Metric (used as housing suffix where a modification is required)
TLC	Combination of LOR and B-10724-xxx contact element (max temp. 120ºC)
TLP	LORP c/w B-10785-xxx contact element for higher temperatures and speeds. (max temp. 200ºC)
Y	One end closed with end cover or end plug

Note:

* SAFD blocks include the seals for standard shaft sizes (shown as highlighted in the tables)
If non-standard shaft sizes are requested those seals must be ordered separately
** Sizes 618, 522 and above are standard with 4 bolt bases. Prefix "F" is not required

How to order SAFD: (Example)

When you order one SAFD 22520-3 7/16 you will receive the following:

1 - Pillow block housing SAFD 520: Cap drilled and tapped with two 1/4" NPT holes (for Alemite 1627-B grease fittings, which are not included.) Base drilled, tapped and plugged with two diagonally opposed 1/2" NPT holes.
2 - Triple ring seals LOR 102 installed in housing hubs.
1 - Bearing SKF 22220 EK
1 - Adapter sleeve HA 320 for shaft dia. 3 7/16

If a "HELD or FIXED" unit is required, add the suffix "H" and 2 fixing rings (locating or stabilizing) FRB 12/180 will be included.
Only one bearing per shaft should be held. CARB bearings displace internally and are therefore always "FREE".
However, they must always be located in the housing with fixing rings as does a true "FIXED" bearing.
If one end closed is required please add the letter "Y" to the assembly number and one EPR 12 will be included.

Series SAFD 500
Pillow blocks of ductile iron for bearings with adapter sleeve, grease or oil lubrication
d_a 1 7/16 - 2 in

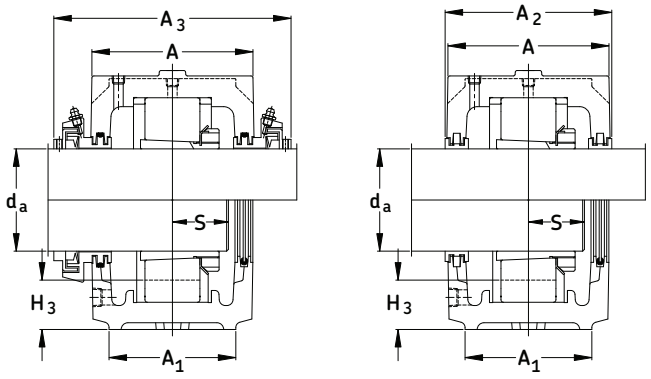

Shaft Dia. d_a	Complete Pillow Block Assembly	Housing	Triple Ring Seal	Taconite Service Seal	Bearing	Adapter Sleeve	Fixing Rings (2 req'd)	Mass Complete	
in								lb.	kg.
1 7/16 [1]	SAFD 1509/ 1 7/16	SAFD 509	LER 17	TER 17	1209 EK	HA 209	FRB 5.5/85	11.5	5.2
	SAFD 2509/ 1 7/16	SAFD 509	LER 17	TER 17	2209 EK	HA 309	FRB 3.5/85	11.7	5.3
	SAFD 22509/ 1 7/16	SAFD 509	LER 17	TER 17	22209 EK	HA 309	FRB 3.5/85	11.7	5.3
	SAFD C2509/ 1 7/16	SAFD 509	LER 17	TER 17	C2209 K*	HA 309E	FRB 3.5/85	12.0	5.5
1 1/2	SAFD 1509/ 1 1/2	SAFD 509	LER 18	-	1209 EK	HE 209	FRB 5.5/85	11.5	5.2
	SAFD 2509/ 1 1/2	SAFD 509	LER 18	-	2209 EK	HE 309	FRB 3.5/85	11.7	5.3
	SAFD 22509/ 1 1/2	SAFD 509	LER 18	-	22209 EK	HE 309	FRB 3.5/85	11.7	5.3
	SAFD C2509/ 1 1/2	SAFD 509	LER 18	-	C2209 K*	HE 309E	FRB 3.5/85	12.0	5.5
1 11/16 [1]	SAFD 1510/ 1 11/16	SAFD 510	LER 20	TER 510/ 1 11/16	1210 EK	HA 210	FRB 6.5/90	12.7	5.8
	SAFD 2510/ 1 11/16	SAFD 510	LER 20	TER 510/ 1 11/16	2210 K	HA 310	FRB 5/90	12.9	5.9
	SAFD 22510/ 1 11/16	SAFD 510	LER 20	TER 510/ 1 11/16	22210 EK	HA 310	FRB 5/90	12.9	5.9
	SAFD C2510/ 1 11/16	SAFD 510	LER 20	TER 510/ 1 11/16	C2210 K*	HA 310E	FRB 5/90	12.9	5.9
1 3/4	SAFD 1510/ 1 3/4	SAFD 510	LER 21	TER 510/ 1 3/4	1210 EK	HE 210	FRB 6.5/90	12.7	5.8
	SAFD 2510/ 1 3/4	SAFD 510	LER 21	TER 510/ 1 3/4	2210 K	HE 310	FRB 5/90	12.9	5.9
	SAFD 22510/ 1 3/4	SAFD 510	LER 21	TER 510/ 1 3/4	22210 EK	HE 310	FRB 5/90	12.9	5.9
	SAFD C2510/ 1 3/4	SAFD 510	LER 21	TER 510/ 1 3/4	C2210 K*	HE 310E	FRB 5/90	12.9	5.9
1 15/16 [1]	SAFD 1511/ 1 15/16	SAFD 511	LER 24	TER 511/ 1 15/16	1211 EK	HA 211	FRB 6/100	16.5	7.5
	SAFD 2511/ 1 15/16	SAFD 511	LER 24	TER 511/ 1 15/16	2211 EK	HA 311	FRB 4/100	16.8	7.6
	SAFD 22511/ 1 15/16	SAFD 511	LER 24	TER 511/ 1 15/16	22211 EK	HA 311	FRB 4/100	16.8	7.6
	SAFD C2511/ 1 15/16	SAFD 511	LER 24	TER 511/ 1 15/16	C2211 K*	HA 311BE	FRB 4/100	16.0	7.3
2	SAFD 1511/2	SAFD 511	LER 25	TER 511/2	1211 EK	HE 211B	FRB 6/100	16.5	7.5
	SAFD 2511/2	SAFD 511	LER 25	TER 511/2	2211 EK	HE 311B	FRB 4/100	16.8	7.6
	SAFD 22511/2	SAFD 511	LER 25	TER 511/2	22211 EK	HE 311B	FRB 4/100	16.8	7.6
	SAFD C2511/ 2	SAFD 511	LER 25	TER 511/2	C2211 K*	HE 311BE	FRB 4/100	16.0	7.3

[1] The highlighted sizes contain seals, which are included in that housing, optional shaft sizes require additional seals.

* Must always be located.

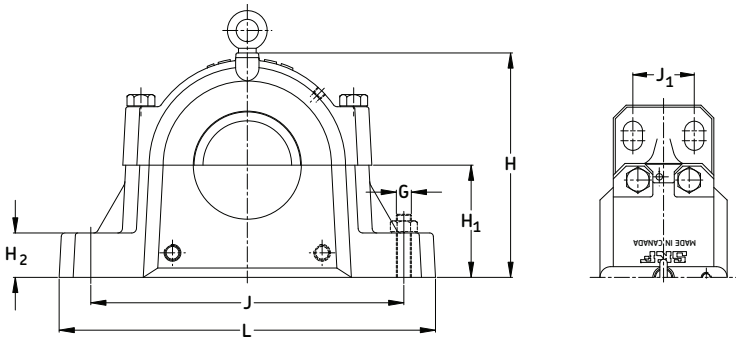

Housing No.	Dimensions							Static Oil Level					Bolts (req'd)		End Plug
	A	A_1	A_2	A_3	H	H_1	H_2	H_3	L	J_{max}	J_{min}	J_1	G	S	
	in/mm														
SAFD 509	3 7/16	2 3/8	3 5/8	-	4 3/8	2 1/4	13/16	31/32	8 1/4	7	6 1/4	-	(2) 1/2	*	EPR 3
	87	60	92	-	111	57.15	21	25	210	178	159	-	(2) 12		
SAFD 510	3 7/16	2 3/8	3 5/8	6 3/4	4 5/8	2 1/2	15/16	15/32	8 1/4	7	6 1/2	-	(2) 1/2	*	EPR 4
	87	60	92	171	117	63.50	24	28	210	178	165	-	(2) 12		
SAFD 511	3 3/4	2 3/4	3 7/8	7	5 1/4	2 3/4	15/16	15/16	9 5/8	7 7/8	7 3/8	-	(2) 5/8	*	EPR 5
	95	70	98	178	133	69.85	24	30	245	200	187	-	(2) 16		

NOTE: Dimension "S" indicates the shaft length from the centre of the bearing to the end of the shaft for housings with one end closed. For tabulation of the dimension "S", see the bearing tables on pages 52 and 53.
When oil lubrication is used static oil level H_3 must be maintained.

For an example on how to order please see page 121.

Series SAFD 500
Pillow blocks of ductile iron, for bearings with adapter sleeve, grease or oil lubrication
d_a 2 3/16 - 2 3/4 in

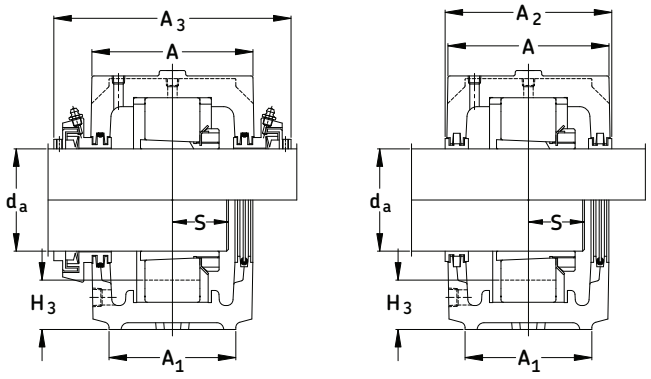

Shaft Dia. d_a	Complete Pillow Block Assembly**	Housing	Triple Ring Seal	Taconite Service Seal	Bearing	Adapter Sleeve	Fixing Rings (2 req'd)	Mass Complete	
in								lb.	kg.
2 3/16 [1]	SAFD 1513/ 2 3/16	SAFD 513	LER 29	TER 513/ 2 3/16	1213 EK	HA 213	FRB 8/120	22.3	10.0
	SAFD 2513/ 2 3/16	SAFD 513	LER 29	TER 513/ 2 3/16	2213 EK	HA 313	FRB 4/120	23.1	10.5
	SAFD 22513/ 2 3/16	SAFD 513	LER 29	TER 513/ 2 3/16	22213EK	HA 313	FRB 4/120	23.1	10.5
	SAFD C2513/ 2 3/16	SAFD 513	LER 29	TER 513/ 2 3/16	C2213 K*	HA 313E	FRB 4/120	22.0	10.0
2 1/4	SAFD 1513/ 2 1/4	SAFD 513	LER 30	TER 513/ 2 1/4	1213 EK	HE 213	FRB 8/120	22.3	10.0
	SAFD 2513/ 2 1/4	SAFD 513	LER 30	TER 513/ 2 1/4	2213 EK	HE 313	FRB 4/120	23.1	10.5
	SAFD 22513/ 2 1/4	SAFD 513	LER 30	TER 513/ 2 1/4	22213EK	HE 313	FRB 4/120	23.1	10.5
	SAFD C2513/ 2 1/4	SAFD 513	LER 30	TER 513/ 2 1/4	C2213 K*	HE 313E	FRB 4/120	22.0	10.0
2 7/16 [1]	(F)SAFD 1515/ 2 7/16	(F)SAFD 515	LOR 37	TER 515/ 2 7/16	1215 K	HA 215	FRB 8/130	27.4	12.5
	(F)SAFD 2515/ 2 7/16	(F)SAFD 515	LOR 37	TER 515/ 2 7/16	2215 K	HA 315	FRB 5/130	28.2	12.8
	(F)SAFD 22515/ 2 7/16	(F)SAFD 515	LOR 37	TER 515/ 2 7/16	22215 EK	HA 315	FRB 5/130	28.4	12.9
	(F)SAFD C2515/ 2 7/16	(F)SAFD 515	LOR 37	TER 515/ 2 7/16	C2215 K*	HA 315E	FRB 5/130	28.4	12.9
2 1/2	(F)SAFD 1515/ 2 1/2	(F)SAFD 515	LOR 38	TER 515/ 2 7/16	1215 K	HE 215	FRB 8/130	27.4	12.5
	(F)SAFD 2515/ 2 1/2	(F)SAFD 515	LOR 38	TER 515/ 2 7/16	2215 K	HE 315	FRB 5/130	28.2	12.8
	(F)SAFD 22515/ 2 1/2	(F)SAFD 515	LOR 38	TER 515/ 2 7/16	22215 EK	HE 315	FRB 5/130	28.4	12.9
	(F)SAFD C2515/ 2 1/2	(F)SAFD 515	LOR 38	TER 515/ 2 7/16	C2215 K*	HE 315E	FRB 5/130	28.4	12.9
2 11/16 [1]	(F)SAFD 1516/ 2 11/16	(F)SAFD 516	LOR 44	TER 516/ 2 11/16	1216 K	HA 216	FRB 8.5/140	32.4	14.7
	(F)SAFD 2516/ 2 11/16	(F)SAFD 516	LOR 44	TER 516/ 2 11/16	2216 K	HA 316	FRB 5/140	33.5	15.2
	(F)SAFD 22516/ 2 11/16	(F)SAFD 516	LOR 44	TER 516/ 2 11/16	22216 EK	HA 316	FRB 5/140	33.6	15.2
	(F)SAFD C2516/ 2 11/16	(F)SAFD 516	LOR 44	TER 516/ 2 11/16	C2216 K*	HA 316E	FRB 5/140	38.0	17.3
2 3/4	(F)SAFD 1516/ 2 3/4	(F)SAFD 516	LOR 45	TER 516/ 2 3/4	1216 K	HE 216	FRB 8.5/140	32.4	14.7
	(F)SAFD 2516/ 2 3/4	(F)SAFD 516	LOR 45	TER 516/ 2 3/4	2216 EK	HE 316	FRB 5/140	33.5	15.2
	(F)SAFD 22516/ 2 3/4	(F)SAFD 516	LOR 45	TER 516/ 2 3/4	22216 EK	HE 316	FRB 5/140	33.6	15.3

[1] The highlighted sizes contain seals, which are included in that housing, optional shaft sizes require additional seals.

* Must always be located.

** (F)SAFD = 2 or 4 bolt base. Sizes 522 and above are standard with 4 bolt base. The prefix (F) is not required

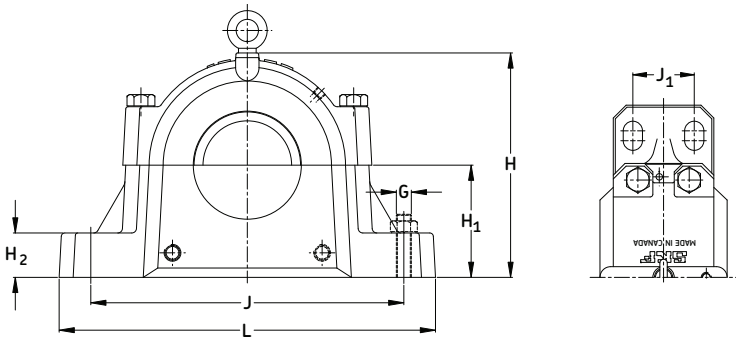

Housing No.	Dimensions							Static Oil Level					Bolts (req'd)		End Plug
	A	A_1	A_2	A_3	H	H_1	H_2	H_3	L	J_{max}	J_{min}	J_1	G	S	
	in/mm														
SAFD 513	4 1/4	3 1/8	4 1/2	7 3/8	5 15/16	3	1	1 3/32	11	9 1/2	8 1/8	-	(2) 5/8	*	EPR 6
	108	79	114	188	151	76.2	25	28	279	241	206	-	(2) 16		
SAFD 515	4 5/8	3 1/8	4 3/4	7 3/4	6 3/8	3 1/4	1 1/8	1 1/8	11 1/4	9 5/8	8 5/8	-	(2) 5/8	*	EPR 7
	117	79	121	197	162	82.55	29	29	286	244	219	-	(2) 16		
FSAFD 515	4 5/8	3 1/8	4 3/4	7 3/4	6 3/8	3 1/4	1 1/8	1 1/8	11 1/4	9 5/8	8 5/8	1 7/8	(4) 1/2	*	EPR 7
	117	79	121	197	162	82.55	29	29	286	244	219	47.6	(4) 12		
SAFD 516	4 3/4	3 1/2	4 7/8	7 15/16	6 7/8	3 1/2	1 1/4	1 1/4	13	11	9 5/8	-	(2) 3/4	*	EPR 8
	121	89	124	202	175	88.9	32	32	330	279	244	-	(2) 20		
FSAFD 516	4 3/4	3 1/2	4 7/8	7 15/16	6 7/8	3 1/2	1 1/4	1 1/4	13	11	9 5/8	2 1/8	(4) 5/8	*	EPR 8
	121	89	124	202	175	88.9	32	32	330	279	244	54	(4) 16		

NOTE: Dimension "S" indicates the shaft length from the centre of the bearing to the end of the shaft for housings with one end closed. For tabulation of the dimension "S", see the bearing tables on pages 52 and 53.

For an example on how to order please see page 121.

Series SAFD 500
Pillow blocks of ductile iron, for bearings with adapter sleeve, grease or oil lubrication
d_a 2 15/16 - 3 7/16 in

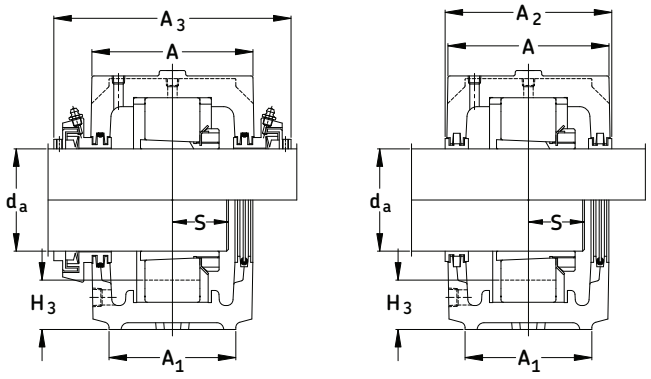

Shaft Dia. d_a	Complete Pillow Block Assembly**	Housing	Triple Ring Seal	Taconite Service Seal	Bearing	Adapter Sleeve	Fixing Rings (2 req'd)	Mass Complete	
in								lb.	kg.
2 15/16 [1]	(F)SAFD 1517/ 2 15/16	(F)SAFD 517	LOR 53	TER 517/ 2 15/16	1217 K	HA 217	FRB 9/150	39.7	18.0
	(F)SAFD 2517/ 2 15/16	(F)SAFD 517	LOR 53	TER 517/ 2 15/16	2217 K	HA 317	FRB 5/150	41.0	18.6
	(F)SAFD 22517/ 2 15/16	(F)SAFD 517	LOR 53	TER 517/ 2 15/16	22217 EK	HA 317	FRB 5/150	41.2	18.7
	(F)SAFD C2517/ 2 15/16	(F)SAFD 517	LOR 53	TER 517/ 2 15/16	C2217 K*	HA 317E	FRB 5/150	38.0	17.3
3	(F)SAFD 1517/ 3	(F)SAFD 517	LOR 54	TER 517/ 3	1217 K	HE 217	FRB 9/150	39.7	18.0
	(F)SAFD 2517/ 3	(F)SAFD 517	LOR 54	TER 517/ 3	2217 K	HE 317	FRB 5/150	41.0	18.6
	(F)SAFD 22517/ 3	(F)SAFD 517	LOR 54	TER 517/ 3	22217 EK	HE 317	FRB 5/150	41.2	18.7
	(F)SAFD C2517/ 3	(F)SAFD 517	LOR 54	TER 517/ 3	C2217 K*	HE 317E	FRB 5/150	38.0	17.3
3 3/16 [1]	(F)SAFD 1518/ 3 3/16	(F)SAFD 518	LOR 188	TER 518/ 3 3/16	1218 K	HA 218	FRB 16.2/160	48.5	22.0
	(F)SAFD 2518/ 3 3/16	(F)SAFD 518	LOR 188	TER 518/ 3 3/16	2218 K	HA 318	FRB 11.2/160	51.0	23.0
	(F)SAFD 22518/ 3 3/16	(F)SAFD 518	LOR 188	TER 518/ 3 3/16	22218 EK	HA 318	FRB 11.2/160	51.0	23.0
	(F)SAFD 23518/ 3 3/16	(F)SAFD 518	LOR 188	TER 518/ 3 3/16	23218CCK/W33	HA 2318	FRB 5/160	54.0	24.4
	(F)SAFD C2518/ 3 3/16	(F)SAFD 518	LOR 188	TER 518/ 3 3/16	C2218 K*	HA 318E	FRB 11.2/160	51.0	23.0
3 1/4	(F)SAFD 1518/ 3 1/4	(F)SAFD 518	LOR 189	TER 518/ 3 1/4	1218 K	HE 218	FRB 16.2/160	48.5	22.0
	(F)SAFD 2518/ 3 1/4	(F)SAFD 518	LOR 189	TER 518/ 3 1/4	2218 K	HE 318	FRB 11.2/160	51.0	23.1
	(F)SAFD 22518/ 3 1/4	(F)SAFD 518	LOR 189	TER 518/ 3 1/4	22218 EK	HE 318	FRB 11.2/160	51.0	23.1
	(F)SAFD 23518/ 3 1/4	(F)SAFD 518	LOR 189	TER 518/ 3 1/4	23218CCK/W33	HE 2318	FRB 5/160	54.0	24.4
	(F)SAFD C2518/ 3 1/4	(F)SAFD 518	LOR 189	TER 518/ 3 1/4	C2218 K*	HE 318E	FRB 11.2/160	47.0	21.364
3 7/16 [1]	(F)SAFD 1520/ 3 7/16	(F)SAFD 520	LOR 102	TER 520/ 3 7/16	1220 K	HA 220	FRB 18/180	61.3	27.8
	(F)SAFD 2520/ 3 7/16	(F)SAFD 520	LOR 102	TER 520/ 3 7/16	2220 K	HA 320	FRB 12/180	64.6	29.3
	(F)SAFD 22520/ 3 7/16	(F)SAFD 520	LOR 102	TER 520/ 3 7/16	22220 EK	HA 320	FRB 12/180	64.2	29.1
	(F)SAFD 23520/ 3 7/16	(F)SAFD 520	LOR 102	TER 520/ 3 7/16	23220CCK/W33	HA 2320	FRB 4.85/180	68.6	31.1
	(F)SAFD C2520/ 3 7/16	(F)SAFD 520	LOR 102	TER 520/ 3 7/16	C2220 K*	HA 320E	FRB 12/180	62.0	28.2

[1] The highlighted sizes contain seals, which are included in that housing, optional shaft sizes require additional seals.

* Must always be located.

** (F)SAFD = 2 or 4 bolt base. Sizes 522 and above are standard with 4 bolt base. The prefix (F) is not required.

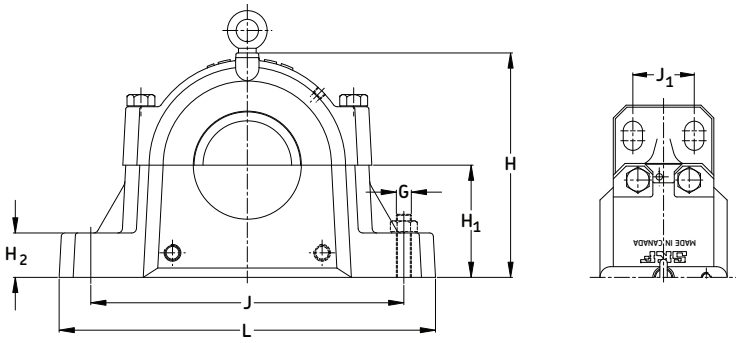

Housing No.	Dimensions							Static Oil Level					Bolts (req'd)		End Plug
	A	A_1	A_2	A_3	H	H_1	H_2	H_3	L	J_{max}	J_{min}	J_1	G	S	
	in/mm														
SAFD 517	4 13/16	3 1/2	5	8	7 5/16	3 3/4	1 1/4	1 3/8	13	11	9 7/8	-	(2) 3/4	*	EPR 9
	122	89	127	203	186	95.25	32	35	330	279	251	-	(2) 20		
FSAFD 517	4 13/16	3 1/2	5	8	7 5/16	3 3/4	1 1/4	1 3/8	13	11	9 7/8	2 1/8	(4) 5/8	*	EPR 9
	122	89	127	203	186	95.25	32	35	330	279	251	54	(4) 16		
SAFD 518	5 1/2	3 7/8	5 3/4	8 11/16	7 3/4	4	1 5/8	1 1/2	13 3/4	11 5/8	10 3/8	-	(2) 3/4	*	EPR 11
	140	98	146	221	197	101.60	41	38	349	295	264	-	(2) 20		
FSAFD 518	5 1/2	3 7/8	5 3/4	8 11/16	7 3/4	4	1 5/8	1 1/2	13 3/4	11 5/8	10 3/8	2 1/8	(4) 5/8	*	EPR 11
	140	98	146	221	197	101.60	41	38	349	295	264	54	(4) 16		
SAFD 520	6	4 3/8	6 1/8	9	8 3/4	4 1/2	1 3/4	1 21/32	15 1/4	13 1/8	11 5/8	-	(2) 7/8	*	EPR 12
	152	111	156	230	222	114.30	44	42	387	333	295	-	(2) 24		
FSAFD 520	6	4 3/8	6 1/8	9	8 3/4	4 1/2	1 3/4	1 21/32	15 1/4	13 1/8	11 5/8	2 3/8	(4) 3/4	*	EPR 12
	152	111	156	230	222	114.30	44	42	387	333	295	60	(4) 20		

NOTE: Dimension "S" indicates the shaft length from the centre of the bearing to the end of the shaft for housings with one end closed. For tabulation of the dimension "S", see the bearing tables on pages 52 and 53.

For an example on how to order please see page 121.

Series SAFD 500
Pillow blocks of ductile iron, for bearings with adapter sleeve, grease or oil lubrication
d_a 3 1/2 - 4 1/4 in

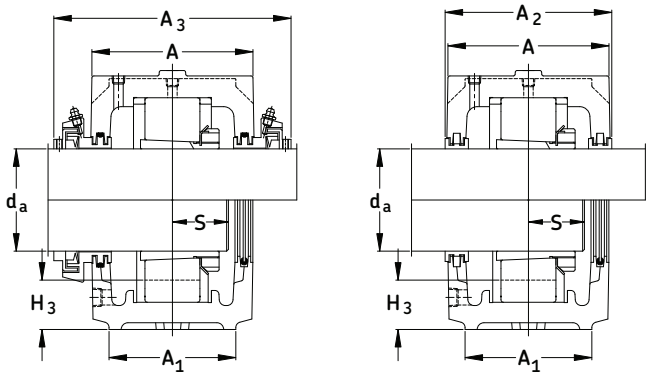

Shaft Dia. d_a	Complete Pillow Block Assembly**	Housing	Triple Ring Seal	Taconite Service Seal	Bearing	Adapter Sleeve	Fixing Rings (2 req'd)	Mass Complete	
in								lb.	kg.
3 1/2	(F)SAFD 1520/ 3 1/2	FSAFD 520	LOR 103	TER 520/ 3 1/2	1220 K	HE 220	FRB 18/180	61.3	27.8
	(F)SAFD 2520/ 3 1/2	FSAFD 520	LOR 103	TER 520/ 3 1/2	2220 K	HE 320	FRB 12/180	64.4	29.3
	(F)SAFD 22520/ 3 1/2	FSAFD 520	LOR 103	TER 520/ 3 1/2	22220 EK	HE 320	FRB 12/180	64.2	29.1
	(F)SAFD 23520/ 3 1/2	FSAFD 520	LOR 103	TER 520/ 3 1/2	23220CCK/W33	HE 2320	FRB 4.85/180	68.6	31.1
	(F)SAFD C2520/ 3 1/2	FSAFD 520	LOR 103	TER 520/ 3 1/2	C2220 K*	HE 320E	FRB 12/180	62.0	28.2
3 15/16 [1]	SAFD 1522/ 3 15/16	SAFD 522	LOR 109	TER 522/ 3 15/16	1222 K	H 222	FRB 21/200	88.0	40.0
	SAFD 2522/ 3 15/16	SAFD 522	LOR 109	TER 522/ 3 15/16	2222 K	H 322	FRB 13.5/200	93.0	42.1
	SAFD 22522/ 3 15/16	SAFD 522	LOR 109	TER 522/ 3 15/16	22222 EK	H 322	FRB 13.5/200	92.4	41.9
	SAFD 23522/ 3 15/16	SAFD 522	LOR 109	TER 522/ 3 15/16	23222CCK/W33	H 2322	FRB 5.1/200	100	45.1
	SAFD C2522/ 3 15/16	SAFD 522	LOR 109	TER 522/ 3 15/16	C2222 K*	H 322E	FRB 13.5/200	73.0	33.2
4	SAFD 1522/4	SAFD 522	LOR 110	TER 522/4	1222 K	HE 222	FRB 21/200	88.0	40.0
	SAFD 2522/4	SAFD 522	LOR 110	TER 522/4	2222 K	HE 322	FRB 13.5/200	93.0	42.2
	SAFD 22522/4	SAFD 522	LOR 110	TER 522/4	22222 EK	HE 322	FRB 13.5/200	92.4	41.9
	SAFD 23522/4	SAFD 522	LOR 110	TER 522/4	23222CCK/W33	HE 2322	FRB 5.1/200	100	45.1
	SAFD C2522/4	SAFD 522	LOR 110	TER 522/4	C2222 K*	HE 322E	FRB 13.5/200	73.0	33.2
4 3/16 [1]	SAFD 22524/4 3/16	SAFD 524	LOR 113	TER 524/4 3/16	22224 EK	HA 3124	FRB 14/215	106	48.0
	SAFD 23524/4 3/16	SAFD 524	LOR 113	TER 524/4 3/16	23224CCK/W33	HA 2324	FRB 5/215	114	52.0
	SAFD C2524/4 3/16	SAFD 524	LOR 113	TER 524/4 3/16	C2224 K*	HA 3124L	FRB 14/215	106	48.0
	SAFD C3524/4 3/16	SAFD 524	LOR 113	TER 524/4 3/16	C3224 K*	HA 2324L	FRB 5/215	114	52.0
4 1/4	SAFD 22524/4 1/4	SAFD 524	LOR 114	TER 524/4 1/4	22224 EK	HE 3124	FRB 14/215	106	48.0
	SAFD 23524/4 1/4	SAFD 524	LOR 114	TER 524/4 1/4	23224CCK/W33	HE 2324	FRB 5/215	114	52.0
	SAFD C2524/4 1/4	SAFD 524	LOR 114	TER 524/4 1/4	C2224 K*	HE 3124L	FRB 14/215	106	48.0
	SAFD C3524/4 1/4	SAFD 524	LOR 114	TER 524/4 1/4	C3224 K*	HE 2324L	FRB 5/215	114	52.0

[1] The highlighted sizes contain seals, which are included in that housing, optional shaft sizes require additional seals.

* Must always be located.

** (F)SAFD = 2 or 4 bolt base. Sizes 522 and above are standard with 4 bolt base. The prefix (F) is not required.

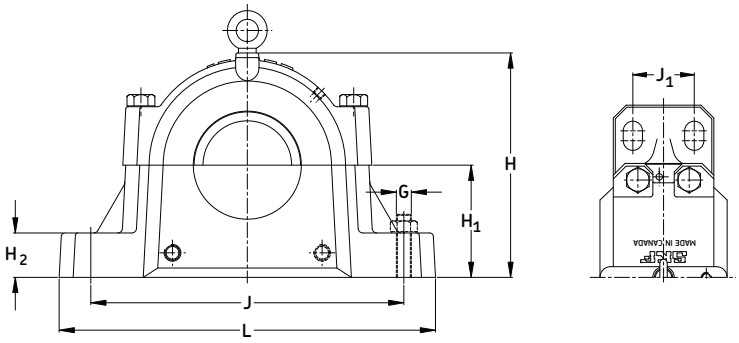

Housing No.	Dimensions							Static Oil Level					Bolts (req'd)		End Plug
	A	A_1	A_2	A_3	H	H_1	H_2	H_3	L	J_{max}	J_{min}	J_1	G	S	
	in/mm														
SAFD 520	6	4 3/8	6 1/8	9	8 3/4	4 1/2	1 3/4	1 21/32	15 1/4	13 1/8	11 5/8	-	(2) 7/8	*	EPR 12
	152	111	156	230	222	114.30	44	42	387	333	295	-	(2) 24		
FSAFD 520	6	4 3/8	6 1/8	9	8 3/4	4 1/2	1 3/4	1 21/32	15 1/4	13 1/8	11 5/8	2 3/8	(4) 3/4	*	EPR 12
	152	111	156	230	222	114.30	44	42	387	333	295	60	(4) 20		
SAFD 522	6 7/16	4 3/4	6 1/2	9 1/2	9 5/8	4 15/16	2	1 25/32	16 1/2	14 1/2	12 5/8	2 3/4	(4) 3/4	*	EPR 13
	164	121	165	242	244	125.41	51	45	419	368	321	70	(4) 20		
SAFD 524	7 1/8	4 3/4	7 3/8	10 5/16	10 1/4	5 1/4	2 1/8	1 27/32	16 1/2	14 1/2	13 1/4	2 3/4	(4) 3/4	*	EPR 14
	181	121	187	262	260	133.35	54	47	419	368	337	70	(4) 20		

NOTE: Dimension "S" indicates the shaft length from the centre of the bearing to the end of the shaft for housings with one end closed. For tabulation of the dimension "S", see the bearing tables on pages 52 and 53.

For an example on how to order please see page 121.

Series SAFD 500
Pillow blocks of ductile iron, for bearings with adapter sleeve, grease or oil lubrication
d_a 4 7/16 - 5 7/16 in

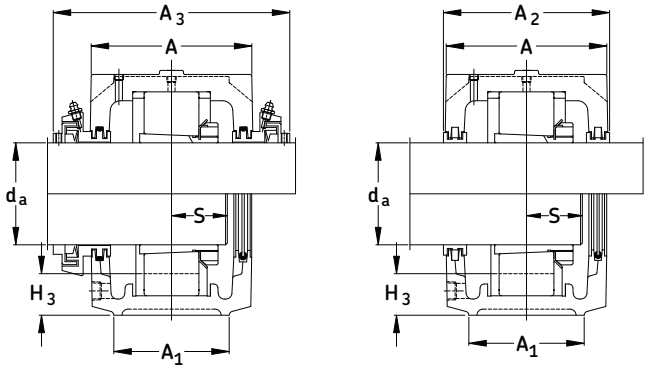

Shaft Dia. d_a	Complete Pillow Block Assembly	Housing	Triple Ring Seal	Taconite Service Seal	Bearing	Adapter Sleeve	Fixing Rings (2 req'd)	Mass Complete	
in								lb.	kg.
4 7/16 [1]	SAFD 22526/4 7/16	SAFD 526	LOR 117	TER 526/4 7/16	22226 EK	HA 3126	FRB 13/230	156	71.0
	SAFD 23526/4 7/16	SAFD 526	LOR 117	TER 526/4 7/16	23226CCK/W33	HA 2326	FRB 5/230	165	75.0
	SAFD C2526/4 7/16	SAFD 526	LOR 117	TER 526/4 7/16	C2226 K*	HA 3126L	FRB 13/230	144	65.5
4 1/2	SAFD 22526/4 1/2	SAFD 526	LOR 118	TER 526/4 1/2	22226 EK	HE 3126	FRB 13/230	156	71.0
	SAFD 23526/4 1/2	SAFD 526	LOR 118	TER 526/4 1/2	23226CCK/W33	HE 2326	FRB 5/230	165	75.0
	SAFD C2526/4 1/2	SAFD 526	LOR 118	TER 526/4 1/2	C2226 K*	HE 3126L	FRB 13/230	144	65.5
4 15/16	SAFD 22528/4 15/16	SAFD 528	LOR 122	TER 528/4 15/16	22228CCK/W33	HA 3128	FRB 15/250	175	80.0
	SAFD 23528/4 15/16	SAFD 528	LOR 122	TER 528/4 15/16	23228CCK/W33	HA 2328	FRB 5/250	188	86.0
	SAFD C2528/4 15/16	SAFD 528	LOR 122	TER 528/4 15/16	C2228 K*	HA 3128L	FRB 15/250	153	69.6
5	SAFD 22528/5	SAFD 528	LOR 123	TER 528/5	22228CCK/W33	HE 3128	FRB 15/250	175	80.0
	SAFD 23528/5	SAFD 528	LOR 123	TER 528/5	23228CCK/W33	HE 2328	FRB 5/250	188	86.0
	SAFDC2528/5	SAFD 528	LOR 123	TER 528/5	C2228 K*	HE 3128L	FRB 15/250	153	69.6
5 3/16 [1]	SAFD 22530/5 3/16	SAFD 530	LOR 125	TER 530/5 3/16	22230CCK/W33	HA 3130	FRB 16.5/270	209	95.0
	SAFD 23530/5 3/16	SAFD 530	LOR 125	TER 530/5 3/16	23230CCK/W33	HA 2330	FRB 5/270	225	102
	SAFD C2530/5 3/16	SAFD 530	LOR 125	TER 530/5 3/16	C2230 K*	HA 3130L	FRB 16.5/270	199	90.5
5 1/4	SAFD 22530/5 1/4	SAFD 530	LOR 126	TER 530/5 1/4	22230CCK/W33	HE 3130	FRB 16.5/270	209	95.0
	SAFD 23530/5 1/4	SAFD 530	LOR 126	TER 530/5 1/4	23230CCK/W33	HE 2330	FRB 5/270	225	102
	SAFD C2530/5 1/4	SAFD 530	LOR 126	TER 530/5 1/4	C2230 K*	HE 3130L	FRB 16.5/270	199	90.5
5 7/16 [1]	SAFD 22532/5 7/16	SAFD 532	LOR 130	TER 532/5 7/16	22232CCK/W33	HA 3132	FRB 17/290	240	110
	SAFD 23532/5 7/16	SAFD 532	LOR 130	TER 532/5 7/16	23232CCK/W33	HA 2332	FRB 5/290	260	120
	SAFD C3532/5 7/16	SAFD 532	LOR 130	TER 532/5 7/16	C3232 K*	HA 2332L	FRB 5/290	260	120

[1] The highlighted sizes contain seals, which are included in that housing, optional shaft sizes require additional seals.

* Must always be located.

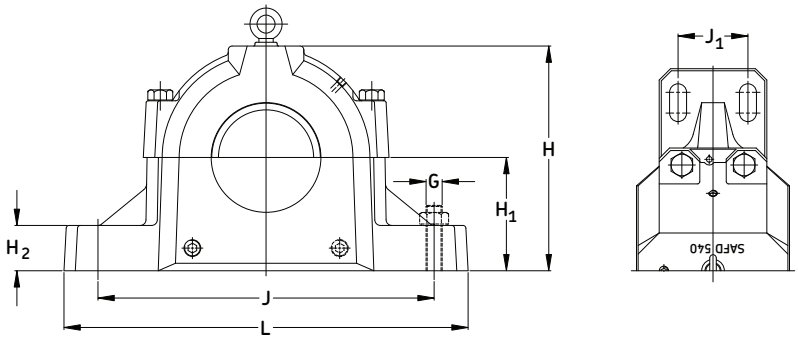

Housing No.	Dimensions							Static Oil Level					Bolts (req'd)		End Plug
	A	A_1	A_2	A_3	H	H_1	H_2	H_3	L	J_{max}	J_{min}	J_1	G	S	
	in/mm														
SAFD 526	7 3/4	5 1/8	8	11	11 3/4	6	2 3/8	2 11/32	18 3/8	16	14 5/8	3 1/4	(4) 7/8	*	EPR 15
	197	130	203	280	298	152.40	60	59	467	406	371	83	(4) 24		
SAFD 528	7 3/8	5 7/8	7 5/8	10 1/2	12	6	2 3/8	2 1/32	20 1/8	17 1/8	16	3 3/8	(4) 1	*	EPR 27
	187	149	194	267	305	152.40	60	52	511	435	406	86	(4) 24		
SAFD 530	8 1/8	6 1/4	8 3/8	11 3/8	12 1/2	6 5/16	2 1/2	2	21 1/4	18 1/4	17	3 3/4	(4) 1	*	EPR 16
	206	159	213	289	318	160.34	64	51	540	464	432	95	(4) 24		
SAFD 532	8 1/2	6 1/4	8 3/4	11 3/4	13 5/16	6 11/16	2 5/8	2 1/16	22	19 1/4	17 3/8	3 3/4	(4) 1	*	EPR 16
	216	159	222	299	338	169.86	67	52	559	489	441	95	(4) 24		

NOTE: Dimension "S" indicates the shaft length from the centre of the bearing to the end of the shaft for housings with one end closed. For tabulation of the dimension "S", see the bearing tables on pages 52 and 53.

For an example on how to order please see page 121.

Series SAFD 500
Pillow blocks of ductile iron, for bearings with adapter sleeve, grease or oil lubrication
d_a 5 1/2 - 6 15/16 in

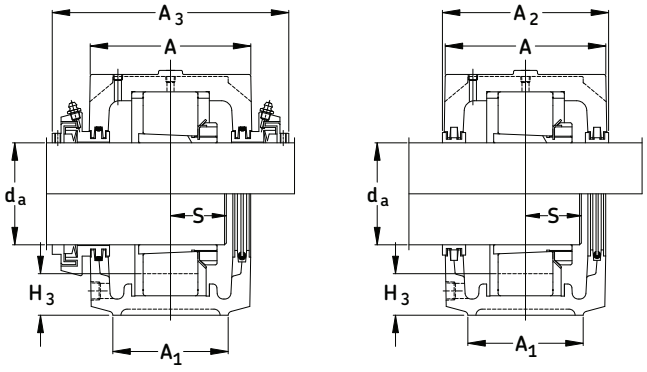

Shaft Dia. d_a	Complete Pillow Block Assembly	Housing	Triple Ring Seal	Taconite Service Seal	Bearing	Adapter Sleeve	Fixing Rings (2 req'd)	Mass Complete	
in								lb.	kg.
5 1/2	SAFD 22532/5 1/2	SAFD 532	LOR 131	TER 532/5 1/2	22232CCK/W33	HE 3132	FRB 17/290	240	110
	SAFD 23532/5 1/2	SAFD 532	LOR 131	TER 532/5 1/2	23232CCK/W33	HE 2332	FRB 5/290	260	120
	SAFD C3532/5 1/2	SAFD 532	LOR 131	TER 532/5 1/2	C3232 K*	HE 2332L	FRB 5/290	260	120
5 15/16 [1]	SAFD 22534/5 15/16	SAFD 534	LOR 140	TER 534/5 15/16	22234CCK/W33	HA 3134	36059-34	280	127
	SAFD 23534/5 15/16	SAFD 534	LOR 140	TER 534/5 15/16	23234CCK/W33	HA 2334	35072-34	301	136
	SAFD C2534/5 15/16	SAFD 534	LOR 140	TER 534/5 15/16	C2234 K*	HA 3134L	36059-34	276	126
6	SAFD 22534/6	SAFD 534	LOR 141	TER 534/6	22234CCK/W33	HE 3134	36059-34	280	127
	SAFD 23534/6	SAFD 534	LOR 141	TER 534/6	23234CCK/W33	HE 2334	35072-34	301	136
	SAFD C2534/6	SAFD 534	LOR 141	TER 534/6	C2234 K*	HE 3134L	36059-34	276	126
6 7/16 [1]	SAFD 22536/6 7/16	SAFD 536	LOR 148	TER 536/6 7/16	22236CCK/W33	HA 3136	36059-36	313	142
	SAFD 23536/6 7/16	SAFD 536	LOR 148	TER 536/6 7/16	23236CCK/W33	HA 2336	35072-36	336	153
	SAFD C3536/6 7/16	SAFD 536	LOR 148	TER 536/6 7/16	C3236 K*	HA 2336	35072-36	336	153
6 1/2	SAFD 22536/6 1/2	SAFD 536	LOR 149	TER 536/6 1/2	22236CCK/W33	HE 3136	36059-36	313	142
	SAFD 23536/6 1/2	SAFD 536	LOR 149	TER 536/6 1/2	23236CCK/W33	HE 2336	35072-36	336	153
	SAFD C3536/6 1/2	SAFD 536	LOR 149	TER 536/6 1/2	C3236 K*	HE 2336	35072-36	336	153
6 15/16 [1]	SAFD 22538/6 15/16	SAFD 538	LOR 155	TER 538/6 15/16	22238CCK/W33	HA 3138	36059-38	355	161
	SAFD 23538/6 15/16	SAFD 538	LOR 155	TER 538/6 15/16	23238CCK/W33	HA 2338	35072-38	381	173
	SAFD C2538/6 15/16	SAFD 538	LOR 155	TER 538/6 15/16	C 2238 K*	HA 3138	36059-38	374	170

[1] The highlighted sizes contain seals, which are included in that housing, optional shaft sizes require additional seals.

* Must always be located.

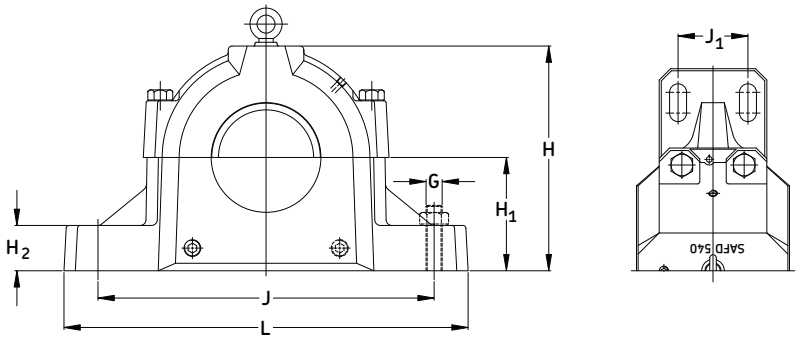

Housing No.	Dimensions							Static Oil Level					Bolts (req'd)		End Plug
	A	A_1	A_2	A_3	H	H_1	H_2	H_3	L	J_{max}	J_{min}	J_1	G	S	
	in/mm														
SAFD 532	8 1/2	6 1/4	8 3/4	11 3/4	13 5/16	6 11/16	2 5/8	2 1/16	22	19 1/4	17 3/8	3 3/4	(4) 1	*	EPR 16
	216	159	222	299	338	169.86	67	52	559	489	441	95	(4) 24		
SAFD 534	9 1/4	6 3/4	9 5/8	12 1/2	14 3/16	7 1/16	2 3/4	2 5/32	24 3/4	21 5/8	19 3/8	4 1/4	(4) 1	*	EPR 18
	235	171	244	318	360	179.39	70	55	629	549	492	108	(4) 24		
SAFD 536	9 5/8	7 1/8	10	13	14 7/8	7 1/2	3	2 3/8	26 3/4	23 5/8	20 7/8	4 5/8	(4) 1	*	EPR 19
	244	181	254	330	378	190.50	76	60	679	600	530	117	(4) 24		
SAFD 538	10 1/2	7 1/2	10 3/4	13 3/4	15 13/16	7 7/8	3 1/8	2 7/16	28	24 3/8	21 5/8	4 1/2	(4) 1 1/4	*	EPR 20
	267	191	273	349	398	200.03	79	62	711	619	549	114	(4) 30		

NOTE: Dimension "S" indicates the shaft length from the centre of the bearing to the end of the shaft for housings with one end closed. For tabulation of the dimension "S", see the bearing tables on pages 52 and 53.

For an example on how to order please see page 121.

Series SAFD 500
Pillow blocks of ductile iron, for bearings with adapter sleeve, grease or oil lubrication
d_a 7 - 8 in

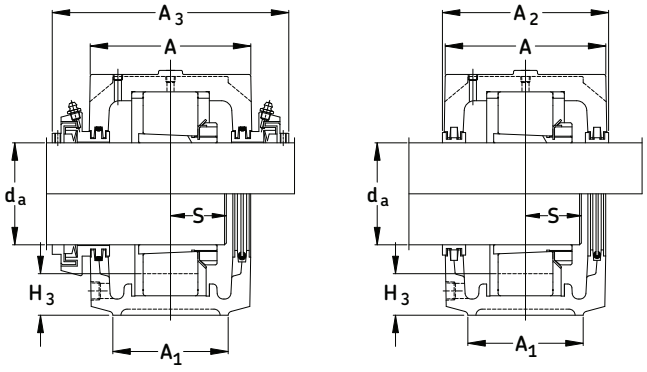

Shaft Dia. d_a	Complete Pillow Block Assembly	Housing	Triple Ring Seal	Taconite Service Seal	Bearing	Adapter Sleeve	Fixing Rings (2 req'd)	Mass Complete	
in								lb.	kg.
7	SAFD 22538/7	SAFD 538	LOR 156	TER 538/7	22238CCK/W33	H 3138/7	36059-38	355	161
	SAFD 23538/7	SAFD 538	LOR 156	TER 538/7	23238CCK/W33	H 2338/7	35072-38	381	173
	SAFD C2538/7	SAFD 538	LOR 156	TER 538/7	C 2238 K*	H 3138/7	36059-38	374	170
7 3/16 [1]	SAFD 22540/7 3/16	SAFD 540	LOR 159	TER 540/7 3/16	22240CCK/W33	HA 3140	36059-40	442	200
	SAFD 23540/7 3/16	SAFD 540	LOR 159	TER 540/7 3/16	23240CCK/W33	HA 2340	35072-40	473	214
7 1/4	SAFD 22540/7 1/4	SAFD 540	LOR 160	TER 540/7 1/4	22240CCK/W33	H 3140/7 1/4	36059-40	442	200
	SAFD 23540/7 1/4	SAFD 540	LOR 160	TER 540/7 1/4	23240CCK/W33	H 2340/7 1/4	35072-40	473	214
7 15/16 [1]	SAFD 22544/7 15/16	SAFD 544	LOR 167	TER 544/7 15/16	22244CCK/W33	SNW 44x7 15/16	36059-44	582	264
	SAFD 23544/7 15/16	SAFD 544	LOR 167	TER 544/7 15/16	23244CCK/W33	SNW 144x7 15/16	35072-44	627	285
	SAFD C2544/7 15/16	SAFD 544	LOR 167	TER 544/7 15/16	C2244 K*	H 3144/7 15/16	36059-44	576	262
8	SAFD 22544/8	SAFD 544	LOR 168	TER 544/8	22244CCK/W33	H 3144/8	36059-44	582	264
	SAFD 23544/8	SAFD 544	LOR 168	TER 544/8	23244CCK/W33	H 2344/8	35072-44	627	285
	SAFD C2544/8	SAFD 544	LOR 168	TER 544/8	C2244 K*	H 3144/8	36059-44	576	262

[1] The highlighted sizes contain seals, which are included in that housing, optional shaft sizes require additional seals.
* Must always be located.

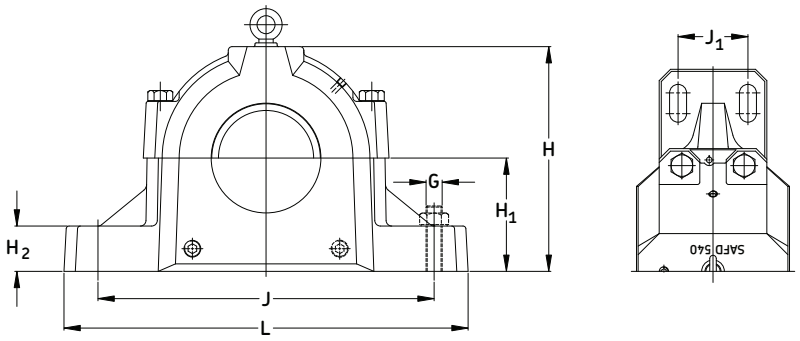

Housing No.	Dimensions							Static Oil Level					Bolts (req'd)		End Plug
	A	A_1	A_2	A_3	H	H_1	H_2	H_3	L	J_{max}	J_{min}	J_1	G	S	
	in/mm														
SAFD 538	10 1/2	7 1/2	10 3/4	13 3/4	15 13/16	7 7/8	3 1/8	2 7/16	28	24 3/8	21 5/8	4 1/2	(4) 1 1/4	*	EPR 20
	267	191	273	349	402	200.03	79	62	711	619	549	114	(4) 30		
SAFD 540	11	8	11 1/4	14 1/4	16 1/2	8 1/4	3 3/8	2 15/32	29 1/2	25	22 1/2	5	(4) 1 1/4	*	EPR 21
	279	203	286	362	419	209.55	86	63	749	635	572	127	(4)30		
SAFD 544	11 3/4	8 3/4	12	15	18 3/4	9 1/2	3 3/4	3 1/8	32 3/4	27 7/8	24 3/4	5 1/4	(4) 1 1/2	*	EPR 23
	298	222	305	381	476	241.30	95	79	832	708	629	133	(4) 36		

NOTE: Dimension "S" indicates the shaft length from the centre of the bearing to the end of the shaft for housings with one end closed. For tabulation of the dimension "S", see the bearing tables on pages 52 and 53.

For an example on how to order please see page 121.

Series SAFD 500
Pillow blocks of ductile iron, for bearings with adapter sleeve, grease or oil lubrication
d_a 50 - 75 mm

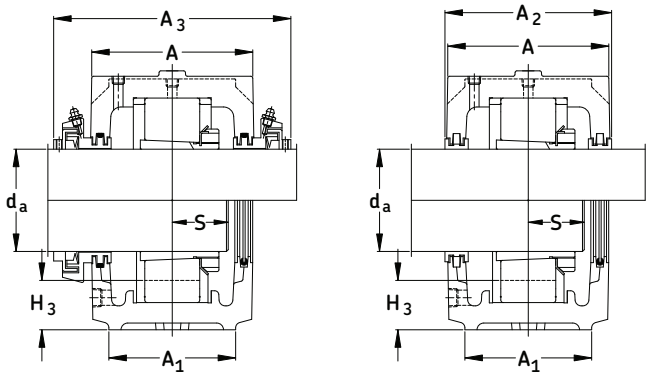

Shaft Dia. d_a	Complete Pillow Block Assembly***	Housing	Triple Ring Seal	Bearing	Adapter Sleeve	Fixing Rings (2 req'd)	Mass Complete	
mm							lb.	kg.
50	SAFD 1511/50	SAFD 511	LER 610	1211 EK	H211	FRB 6/100	16.5	7.5
	SAFD 2511/50	SAFD 511	LER 610	2211 EK	H311	FRB 4/100	16.8	7.6
	SAFD 22511/50	SAFD 511	LER 610	22211 EK	H311	FRB 4/100	16.9	7.6
	SAFD C2511/50	SAFD 511	LER 610	C2211 K*	H311E	FRB 4/100	16.0	7.3
60	SAFD 1513/60M	SAFD 513 M**	LER 29/60M	1213 EK	H213	FRB 8/120	22.3	10.0
	SAFD 2513/60M	SAFD 513 M**	LER 29/60M	2213 EK	H313	FRB 4/120	23.1	10.5
	SAFD 22513/60M	SAFD 513 M**	LER 29/60M	22213 EK	H313	FRB 4/120	23.1	10.5
	SAFD C2513/60M	SAFD 513 M**	LER 29/60M	C2213 K*	H313E	FRB 4/120	22.0	10.0
65	(F)SAFD 1515/65	(F)SAFD 515 M**	LOR 611	1215 K	H215	FRB 8/130	27.4	12.5
	(F)SAFD 2515/65	(F)SAFD 515 M**	LOR 611	2215 K	H315	FRB 5/130	28.2	12.8
	(F)SAFD 22515/65	(F)SAFD 515 M**	LOR 611	22215 EK	H315	FRB 5/130	28.4	12.9
	(F)SAFD C2515/65	(F)SAFD 515 M**	LOR 611	C2215 K*	H315E	FRB 5/130	28.4	12.9
70	(F)SAFD 1516/70	(F)SAFD 516	LOR 643	1216K	H 216	FRB 8.5/140	32.4	14.7
	(F)SAFD 2516/70	(F)SAFD 516	LOR 643	2216 K	H 316	FRB 5/140	33.5	15.2
	(F)SAFD 22516/70	(F)SAFD 516	LOR 643	22216 EK	H 316	FRB 5/140	33.6	15.2
	(F)SAFD C2516/70	(F)SAFD 516	LOR 643	C2216 EK*	H 316E	FRB 5/140	33.6	15.2
75	(F)SAFD 1517/75	(F)SAFD 517	LOR 542	1217 K	H 217	FRB 9/150	39.7	18.0
	(F)SAFD 2517/75	(F)SAFD 517	LOR 542	2217 K	H 317	FRB 5/150	41.0	18.6
	(F)SAFD 22517/75	(F)SAFD 517	LOR 542	22217 EK	H 317	FRB 5/150	41.2	18.7
	(F)SAFD C2517/75	(F)SAFD 517	LOR 542	C2217 K*	H 317E	FRB 5/150	38.0	17.3

* Must always be located.

** Standard housing must be modified to accommodate the metric seals.

*** (F)SAFD = 2 or 4 bolt base. Sizes 522 and above are standard with 4 bolt base. The prefix (F) is not required.

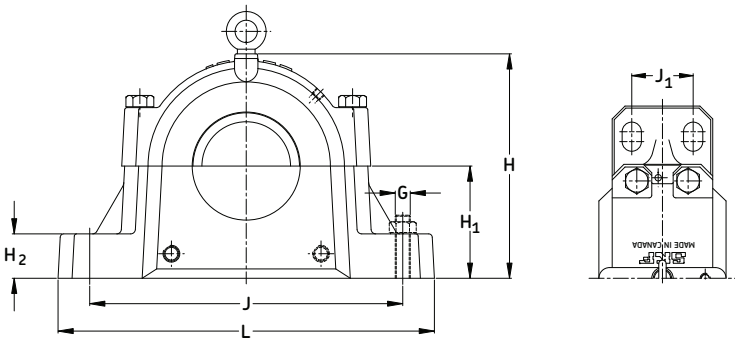

Housing No.	Dimensions							Static Oil Level					Bolts (req'd)		End Plug
	A	A_1	A_2	A_3	H	H_1	H_2	H_3	L	J_{max}	J_{min}	J_1	G	S	
	in/mm														
SAFD 511	3 3/4	2 3/4	3 7/8	7	5 1/4	2 3/4	15/16	1 3/16	9 5/8	7 7/8	7 3/8	-	(2) 5/8	*	EPR 5
	95	70	98	178	133	69.85	24	30	245	200	187	-	(2) 16		
SAFD 513 M	4 1/4	3 1/8	4 1/2	7 3/8	5 15/16	3	1	1 3/32	11	9 1/2	8 1/8	-	(2) 5/8	*	EPR 6
	108	79	114	188	151	76.20	25	28	279	241	206	-	(2) 16		
SAFD 515 M	4 5/8	3 1/8	4 3/4	7 3/4	6 3/8	3 1/4	1 1/8	1 1/8	11 1/4	9 5/8	8 5/8	-	(2) 5/8	*	EPR 7
	117	79	121	197	162	82.55	29	29	286	244	219	-	(2) 16		
FSAFD 515 M	4 5/8	3 1/8	4 3/4	7 3/4	6 3/8	3 1/4	1 1/8	1 1/8	11 1/4	9 5/8	8 5/8	1 7/8	(4) 1/2	*	EPR 7
	117	79	121	197	162	82.55	29	29	286	244	219	48	(4) 12		
SAFD 516	4 3/4	3 1/2	4 7/8	7 15/16	6 7/8	3 1/2	1 1/4	1 1/4	13	11	9 5/8	-	(2) 3/4	*	EPR 8
	121	89	124	202	175	88.90	32	32	330	279	244	-	(2) 20		
FSAFD 516	4 3/4	3 1/2	4 7/8	7 15/16	6 7/8	3 1/2	1 1/4	1 1/4	13	11	9 5/8	2 1/8	(4) 5/8	*	EPR 8
	121	89	124	202	175	88.90	32	32	330	279	244	54	(4) 16		
SAFD 517	4 13/16	3 1/2	5	8	7 5/16	3 3/4	1 1/4	1 3/8	13	11	9 7/8	-	(2) 3/4	*	EPR 9
	122	89	127	203	186	95.25	32	35	330	279	251	-	(2) 20		
FSAFD 517	4 13/16	3 1/2	5	8	7 5/16	3 3/4	1 1/4	1 3/8	13	11	9 7/8	2 1/8	(4) 5/8	*	EPR 9
	122	89	127	203	186	95.25	32	35	330	279	251	54	(4) 16		

NOTE: Dimension "S" indicates the shaft length from the centre of the bearing to the end of the shaft for housings with one end closed. For tabulation of the dimension "S", see the bearing tables on pages 52 and 53.

For an example on how to order please see page 121.

Series SAFD 500
Pillow blocks of ductile iron, for bearings with adapter sleeve, grease or oil lubrication
d_a 80 - 115 mm

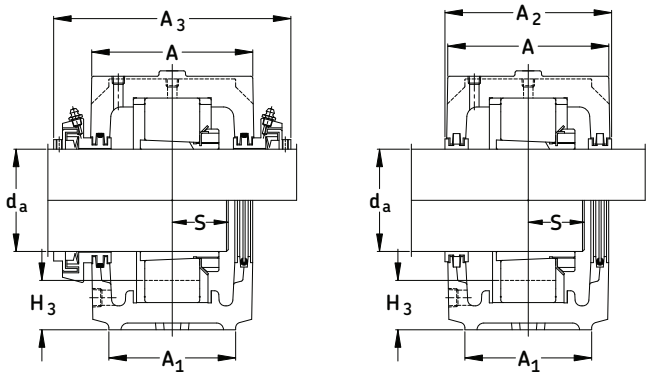

Shaft Dia. d_a	Complete Pillow Block Assembly***	Housing	Triple Ring Seal	Bearing	Adapter Sleeve	Fixing Rings (2 req'd)	Mass Complete	
mm							lb.	kg.
80	(F)SAFD 1518/80	(F)SAFD 518	LOR 639	1218 K	H 218	FRB 16.2/160	48.5	22.0
	(F)SAFD 2518/80	(F)SAFD 518	LOR 639	2218 K	H 318	FRB 11.2/160	51.0	23.0
	(F)SAFD 22518/80	(F)SAFD 518	LOR 639	22218 EK	H 318	FRB 11.2/160	51.0	23.0
	(F)SAFD C2518/80	(F)SAFD 518	LOR 639	C2218 K*	H 318E	FRB 11.2/160	47.0	21.4
90	(F)SAFD 1520/90M	(F)SAFD 520 M**	LOR 640	1220 K	H 220	FRB 18/180	61.3	27.8
	(F)SAFD 2520/90M	(F)SAFD 520 M**	LOR 640	2220 K	H 320	FRB 12/180	64.6	29.3
	(F)SAFD 22520/90M	(F)SAFD 520 M**	LOR 640	22220 EK	H 320	FRB 12/180	64.2	29.1
	(F)SAFD 23520/90M	(F)SAFD 520 M**	LOR 640	23220CCK/W33	H 2320	FRB 4.85/180	68.6	31.1
	(F)SAFD C2520/90M	(F)SAFD 520 M**	LOR 640	C2220 K*	H 320E	FRB 12/180	62.0	28.2
100	SAFD 1522/100	SAFD 522	LOR 109	1222 K	H 222	FRB 21/200	88.0	40.0
	SAFD 2522/100	SAFD 522	LOR 109	2222 K	H 322	FRB 13.5/200	93.0	42.1
	SAFD 22522/100	SAFD 522	LOR 109	22222 EK	H 322	FRB 13.5/200	92.4	41.9
	SAFD 23522/100	SAFD 522	LOR 109	23222CCK/W33	H 2322	FRB 5.1/200	100	45.1
	SAFD C2522/100	SAFD 522	LOR 109	C2222 K*	H 322E	FRB 13.5/200	73.0	41.9
110	SAFD 22524/110	SAFD 524 M**	LOR 655	22224 EK	H 3124	FRB 14/215	106	48.0
	SAFD 23524/110	SAFD 524 M**	LOR 655	23224CCK/W33	H 2324	FRB 5/215	114	52.0
	SAFD C3524/110	SAFD 524 M**	LOR 655	C3224 K*	H 2324L	FRB 5/215	114	52.0
115	SAFD 22526/115	SAFD 526	LOR 600	22226 EK	H 3126	FRB 13/230	156	71.0
	SAFD 23526/115	SAFD 526	LOR 600	23226CCK/W33	H 2326	FRB 5/230	165	75.0
	SAFD C2526/115	SAFD 526	LOR 600	C2226 K *	H 3126L	FRB 13/230	144	65.5

* Must always be located.

** Standard housing must be modified to accommodate the metric seals.

*** (F)SAFD = 2 or 4 bolt base. Sizes 522 and above are standard with 4 bolt base. The prefix (F) is not required.

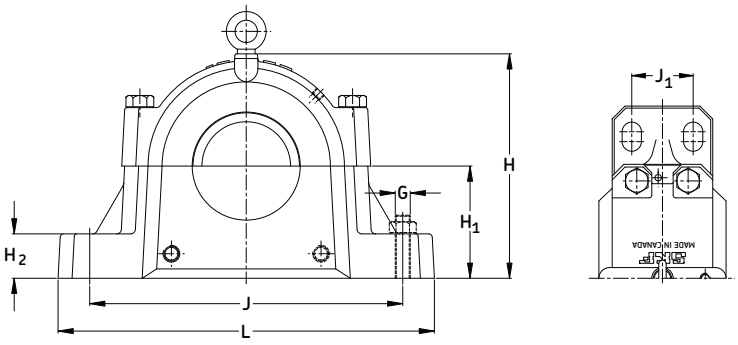

Housing No.	Dimensions							Static Oil Level					Bolts (req'd)		End Plug
	A	A_1	A_2	A_3	H	H_1	H_2	H_3	L	J_{max}	J_{min}	J_1	G	S	
	in/mm														
SAFD 518	5 1/2	3 7/8	5 3/4	8 11/16	7 3/4	4	1 5/8	1 1/2	13 3/4	11 5/8	10 3/8	-	(2) 3/4	*	EPR 11
	140	98	146	221	197	101.60	41	38	349	295	264	-	(2) 20		
FSAFD 518	5 1/2	3 7/8	5 3/4	8 11/16	7 3/4	4	1 5/8	1 1/2	13 3/4	11 5/8	10 3/8	2 1/8	(4) 5/8	*	EPR 11
	140	98	146	221	197	101.60	41	38	349	295	264	54	(4) 16		
SAFD 520 M	6	4 3/8	6 1/8	9	8 3/4	4 1/2	1 3/4	1 21/32	15 1/4	13 1/8	11 5/8	-	(2) 7/8	*	EPR 12
	152	111	156	230	222	114.30	44	42	387	333	295	-	(2) 24		
FSAFD 520 M	6	4 3/8	6 1/8	9	8 3/4	4 1/2	1 3/4	1 21/32	15 1/4	13 1/8	11 5/8	2 3/8	(4) 3/4	*	EPR 12
	152	111	156	230	222	114.30	44	42	387	333	295	60	(4) 20		
SAFD 522	6 7/16	4 3/4	6 1/2	9 1/2	9 5/8	4 15/16	2	1 25/32	16 1/2	14 1/2	12 5/8	2 3/4	(4) 3/4	*	EPR 13
	164	121	165	242	244	125.41	51	45	419	368	321	70	(4) 20		
SAFD 524 M	7 1/8	4 3/4	7 3/8	10 5/16	10 1/4	5 1/4	2 1/8	1 27/32	16 1/2	14 1/2	13 1/4	2 3/4	(4) 3/4	*	EPR 14
	181	121	187	262	260	133.35	54	47	419	368	337	70	(4) 20		
SAFD 526	7 3/4	5 1/8	8	11	11 3/4	6	2 3/8	2 11/32	18 3/8	16	14 5/8	3 1/4	(4) 7/8	*	EPR 15
	197	130	203	280	298	152.40	60	59	467	406	371	83	(4) 24		

NOTE: Dimension "S" indicates the shaft length from the centre of the bearing to the end of the shaft for housings with one end closed. For tabulation of the dimension "S", see the bearing tables on pages 52 and 53.

For an example on how to order please see page 121.

Series SAFD 500
Pillow blocks of ductile iron, for bearings with adapter sleeve, grease or oil lubrication
d_a 125 - 200 mm

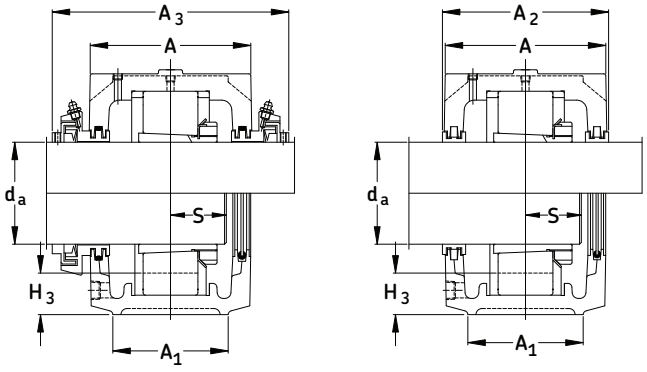

Shaft Dia. d_a	Complete Pillow Block Assembly	Housing	Triple Ring Seal	Bearing	Adapter Sleeve	Fixing Rings (2 req'd)	Mass Complete	
mm							lb.	kg.
125	SAFD 22528/125	SAFD 528	LOR 575	22228CCK/W33	H 3128	FRB 15/250	175	80.0
	SAFD 23528/125	SAFD 528	LOR 575	23228CCK/W33	H 2328	FRB 5/250	188	86.0
	SAFD C2528/125	SAFD 528	LOR 575	C2228 K*	H 3128L	FRB 15/250	153	69.5
135	SAFD 22530/135	SAFD 530	LER 125/135	22230CCK/W33	H 3130	FRB 16.5/270	209	95.0
	SAFD 23530/135	SAFD 530	LER 125/135	23230CCK/W33	H 2330	FRB 5/270	225	102
	SAFD C2530/135	SAFD 530	LER 125/135	C2230 K*	H 3130L	FRB 16.5/270	199	90.5
140	SAFD 22532/140	SAFD 532	LOR 595	22232CCK/W33	H 3132	FRB 17/290	240	110
	SAFD 23532/140	SAFD 532	LOR 595	23232CCK/W33	H 2332	FRB 5/290	260	120
	SAFD C3532/140	SAFD 532	LOR 595	C3232 K*	H 2332L	FRB 5/290	260	120
150	SAFD 22534/150	SAFD 534	LOR 577	22234CCK/W33	H 3134	36059-34	280	127
	SAFD 23534/150	SAFD 534	LOR 577	23234CCK/W33	H 2334	35072-34	301	136
	SAFD C2534/150	SAFD 534	LOR 577	C2234 K*	H 3134L	36059-34	276	126
160	SAFD 22536/160	SAFD 536	LOR 596	22236CCK/W33	H 3136	36059-36	313	142
	SAFD 23536/160	SAFD 536	LOR 596	23236CCK/W33	H 2336	35072-36	336	153
	SAFD C3536/160	SAFD 536	LOR 596	C3236 K*	H 2336	35072-36	336	153
170	SAFD 22538/170	SAFD 538	LOR 601	22238CCK/W33	H 3138	36059-38	355	161
	SAFD 23538/170	SAFD 538	LOR 601	23238CCK/W33	H 2338	35072-38	381	173
	SAFD C2538/170	SAFD 538	LOR 601	C2238 K*	H 3138	36059-38	374	170
180	SAFD 22540/180	SAFD 540	LOR 574	22240CCK/W33	H 3140	36059-40	442	200
	SAFD 23540/180	SAFD 540	LOR 574	23240CCK/W33	H 2340	35072-40	473	214
200	SAFD 22544/200	SAFD 544	LOR 166	22244CCK/W33	H 3144	36059-44	582	268
	SAFD 23544/200	SAFD 544	LOR 166	23244CCK/W33	H 2344	35072-44	627	285
	SAFD C2544/200	SAFD 544	LOR 166	C2244 K*	OH 3144H	36059-44	576	262

* Must always be located.

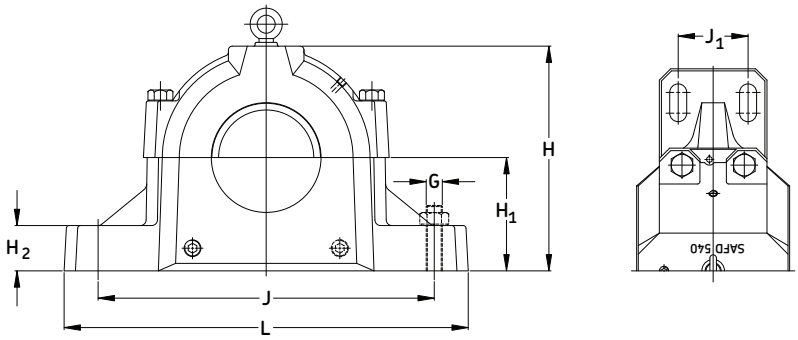

Housing No.	Dimensions							Static Oil Level					Bolts (req'd)		End Plug
	A	A_1	A_2	A_3	H	H_1	H_2	H_3	L	J_{max}	J_{min}	J_1	G	S	
	in/mm														
SAFD 528	7 3/8	5 7/8	7 5/8	10 1/2	12	6	2 3/8	2 1/32	20 1/8	17 1/8	16	3 3/8	(4) 1	*	EPR 27
	187	149	194	267	305	152.40	60	52	511	435	406	86	(4) 24		
SAFD 530	8 1/8	6 1/4	8 3/8	11 3/8	12 1/2	6 5/16	2 1/2	2	21 1/4	18 1/4	17	3 3/4	(4) 1	*	EPR 16
	206	159	213	289	318	160.34	64	51	540	464	432	95	(4) 24		
SAFD 532	8 1/2	6 1/4	8 3/4	11 3/4	13 5/16	6 11/16	2 5/8	2 1/16	22	19 1/4	17 3/8	3 3/4	(4) 1	*	EPR 16
	216	159	222	299	338	169.86	67	52	559	489	441	95	(4) 24		
SAFD 534	9 1/4	6 3/4	9 5/8	12 1/2	14 3/16	7 1/16	2 3/4	2 5/32	24 3/4	21 5/8	19 3/8	4 1/4	(4) 1	*	EPR 18
	235	171	244	318	360	179.39	70	55	629	549	492	108	(4) 24		
SAFD 536	9 5/8	7 1/8	10	13	14 7/8	7 1/2	3	2 3/8	26 3/4	23 5/8	20 7/8	4 5/8	(4) 1	*	EPR 19
	244	181	254	330	378	190.50	76	60	679	600	530	117	(4) 24		
SAFD 538	10 1/2	7 1/2	10 3/4	13 3/4	15 13/16	7 7/8	3 1/8	2 7/16	28	24 3/8	21 5/8	4 1/2	(4) 1 1/4	*	EPR 20
	267	191	273	349	402	200.03	79	62	711	619	549	114	(4) 30		
SAFD 540	11	8	11 1/4	14 1/4	16 1/2	8 1/4	3 3/8	2 15/32	29 1/2	25	22 1/2	5	(4) 1 1/4	*	EPR 21
	279	203	286	362	419	209.55	86	63	749	635	572	127	(4)30		
SAFD 544	11 3/4	8 3/4	12	15	18 3/4	9 1/2	3 3/4	3 1/8	32 3/4	27 7/8	24 3/4	5 1/4	(4) 1 1/2	*	EPR 23
	298	222	305	381	476	241.30	95	79	832	708	629	133	(4) 36		

NOTE: Dimension "S" indicates the shaft length from the centre of the bearing to the end of the shaft for housings with one end closed. For tabulation of the dimension "S", see the bearing tables on pages 52 and 53.

For an example on how to order please see page 121.

Pillow Block Housings

SAFD, FSAFD

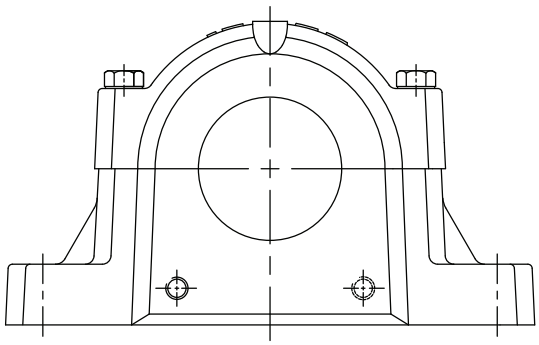

MATERIAL	Ductile Iron ASTM A536 grade 65-45-12	
BEARING SERIES USED	12, 12E, 22, 22E, 222CC, 222E, 232CC	
SHAFT SIZE RANGE	2-13/16" to 9-9/16"	72mm to 243mm
PILLOW BLOCK SIZE	213 - 244 (cylindrical bore mounting)	
PILLOW BLOCK LUBRICATION	Grease or Oil	
STANDARD SEALS	LER 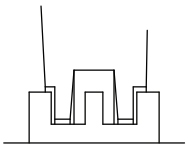	LOR & LORP 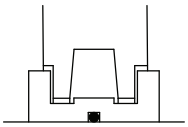
OPTIONAL SEALS	LOR + Contact element B-10724-xxx or B-10785-xxx 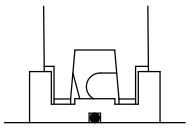	TER-C 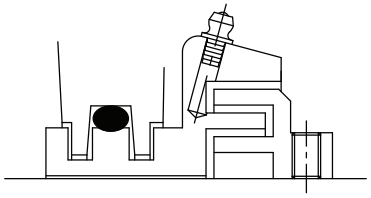 TER-CV 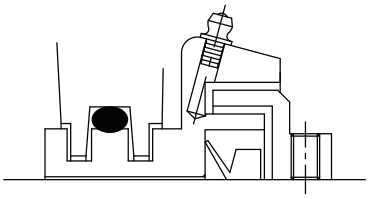

Note : Consult SKF for availability of Metric LOR seals.

SAFD Split Pillow Block Nomenclature
Cylindrical Bore Mounting

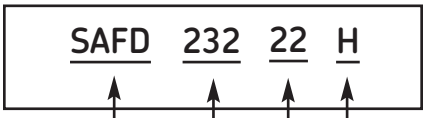

Base

~~0~~	Two bolt
F**	Four bolt

Basic Design

Size

Bearing size: 22 = 110mm bore

Suffixes

~~0~~	Standard LER/LOR triple ring seals (included)*
C	Taconite service seal TER..C of Canadian design (1/pkg)
CV	Taconite service seal TER..CV of Canadian design c/w V ring (1/pkg)
D	Purgeable labyrinth seal TSNC..D c/w V ring (1/pkg)
E	Purgeable labyrinth seal TSNC..E without V ring (1/pkg)
H	Held bearing c/w fixing rings
TLC	Combination of LOR and B-10724-xxx contact element (max temp. 120C)
TLP	LORP with B-10785-xxx contact element for higher temperatures and speeds. (max. temp. 200C)
Y	One end closed with end cover or end plug

Note:

* SAFD blocks include the seals for standard shaft sizes (highlighted print.) If non-standard shaft sizes are requested, those seals must be ordered separately.

** Sizes 222, 318 and above come as standard with 4 bolt bases, Prefix "F" not required.

How to order: (Example)

When you order one SAFD 23222 you will receive a package containing the following:

1 - Pillow block housing SAFD 222. Cap drilled, tapped and plugged with two holes ¼" NPT for an Alemite 1627-B grease fittings, which is not included.
Base, drilled, tapped and plugged with two diagonally opposed holes ½" NPT.

2 - Triple ring seals: LOR 121 for shaft diameter d_a (4 7/8")
LOR 113 for shaft diameter d_b (4 3/16")

1 - Bearing SKF 23222 CC/W33

1 - Locknut AN 22

1 - Lockwasher W22

If a "HELD or FIXED" unit is required, add the suffix "H" and 2 fixing rings (locating or stabilizing) FRB 5.1/200 will be included.
Only one bearing per shaft should be held. CARB bearings displace internally and are therefore always "FREE".
However, they must always be located in the housing with fixing rings as does a true "FIXED" bearing.
If one end is closed, add "Y" to the assembly number and one EPR 14 end plug will be included.

Series SAFD 200
Pillow blocks of ductile iron, for bearings with cylindrical bore
d_a 3 7/16 - 4 7/8 in
d_b 2 13/16 - 4 3/16 in

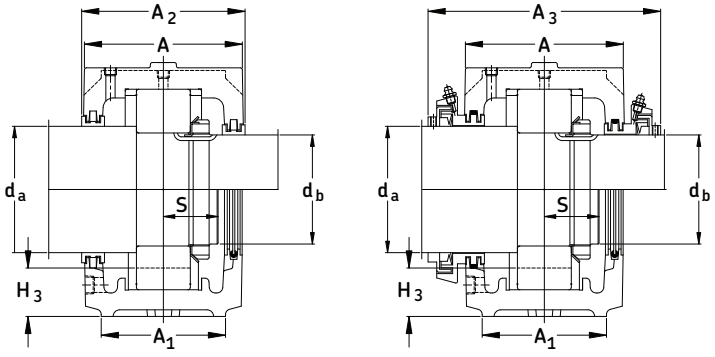

Shaft Dia. d_a	Shaft Dia. d_b	Complete Pillow Block Assembly	Housing	Triple Ring Seal for Shaft Dia. d_a	Triple Ring Seal for Shaft Dia. d_b	Bearing	Lock Nut	Lock Washer	Fixing Rings (2 req'd)	Mass Complete	
in										lb.	kg.
3 7/16	2 13/16	(F)SAFD 1215	(F)SAFD 215	LOR 79	LOR 46	1215	AN 15	W 15	FRB 8/130	26.8	12.1
		(F)SAFD 2215	(F)SAFD 215	LOR 79	LOR 46	2215 E	AN 15	W 15	FRB 5/130	27.3	12.4
		(F)SAFD 22215	(F)SAFD 215	LOR 79	LOR 46	22215 E	AN 15	W 15	FRB 5/130	27.5	12.5
3 5/8	3	(F)SAFD 1216	(F)SAFD 216	LOR 82	LOR 54	1216	AN 16	W 16	FRB 8.5/140	31.6	14.4
		(F)SAFD 2216	(F)SAFD 216	LOR 82	LOR 54	2216 E	AN 16	W 16	FRB 5/140	32.4	14.7
		(F)SAFD 22216	(F)SAFD 216	LOR 82	LOR 54	22216 E	AN 16	W 16	FRB 5/140	32.5	14.8
3 15/16	3 3/16	(F)SAFD 1217	(F)SAFD 217	LOR 89	LOR 63	1217	AN 17	W 17	FRB 9/150	38.7	17.6
		(F)SAFD 2217	(F)SAFD 217	LOR 89	LOR 63	2217	AN 17	W 17	FRB 5/150	39.7	18.0
		(F)SAFD 22217	(F)SAFD 217	LOR 89	LOR 63	22217 E	AN 17	W 17	FRB 5/150	39.9	18.1
4 1/8	3 3/8	(F)SAFD 1218	(F)SAFD 218	LOR 112	LOR 191	1218	AN 18	W 18	FRB 16.2/160	47.5	21.5
		(F)SAFD 2218	(F)SAFD 218	LOR 112	LOR 191	2218	AN 18	W 18	FRB 11.2/160	49.4	22.4
		(F)SAFD 22218	(F)SAFD 218	LOR 112	LOR 191	22218 E	AN 18	W 18	FRB 11.2/160	49.4	22.4
4 1/2	3 13/16	(F)SAFD 1220	(F)SAFD 220	LOR 118	LOR 106	1220	AN 20	W 20	FRB 18/180	62.0	28.1
		(F)SAFD 2220	(F)SAFD 220	LOR 118	LOR 106	2220	AN 20	W 20	FRB 12/180	63.0	28.6
		(F)SAFD 22220	(F)SAFD 220	LOR 118	LOR 106	22220 E	AN 20	W 20	FRB 12/180	62.6	28.4
		(F)ASFD 23220	(F)SAFD 220	LOR 118	LOR 106	23220CC/W33	AN 20	W 20	FRB 4.85/180	66.1	30.0
4 7/8	4 3/16	SAFD 1222	SAFD 222	LOR 121	LOR 113	1222	AN 22	W 22	FRB 21/200	86.7	39.3
		SAFD 2222	SAFD 222	LOR 121	LOR 113	2222	AN 22	W 22	FRB 13.5/200	91.0	41.3
		SAFD 22222	SAFD 222	LOR 121	LOR 113	22222 E	AN 22	W 22	FRB 13.5/200	90.4	41.0
		SAFD 23222	SAFD 222	LOR 121	LOR 113	23222CC/W33	AN 22	W 22	FRB 5.1/200	96.0	43.6

** (F)SAF = either a 2 or 4 bolt base. Sizes 618, 522 and above are standard with 4 bolt bases. No (F) required.

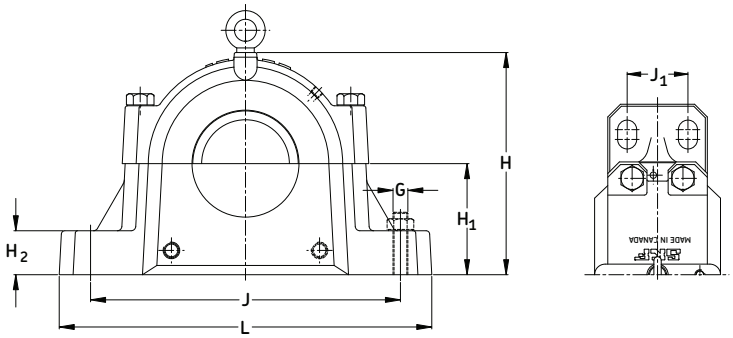

Housing No.	Dimensions							Static Oil Level					Bolts (req'd)		End Plug
	A	A_1	A_2	A_3	H	H_1	H_2	H_3	L	J_{max}	J_{min}	J_1	G	S	
	in/mm														
SAFD 215	4 5/8	3 1/8	4 3/4	7 3/4	6 3/8	3 1/4	1 1/8	1 1/8	11 1/4	9 5/8	8 5/8	-	(2) 5/8	*	EPR 8
	117	79	121	197	162	82.55	29	29	286	244	219	-	(2) 16		
FSAFD 215	4 5/8	3 1/8	4 3/4	7 3/4	6 3/8	3 1/4	1 1/8	1 1/8	11 1/4	9 5/8	8 5/8	1 7/8	(4) 1/2	*	EPR 8
	117	79	121	197	162	82.55	29	29	286	244	219	48	(4) 12		
SAFD 216	4 3/4	3 1/2	4 7/8	7 15/16	6 7/8	3 1/2	1 3/16	1 1/4	13	11	9 5/8	-	(2) 3/4	*	EPR 9
	121	89	124	202	175	88.90	30	32	330	279	244	-	(2) 20		
FSAFD 216	4 3/4	3 1/2	4 7/8	7 15/16	6 7/8	3 1/2	1 3/16	1 1/4	13	11	9 5/8	2 1/8	(4) 5/8	*	EPR 9
	121	89	124	202	175	88.90	30	32	330	279	244	54	(4) 16		
SAFD 217	4 13/16	3 1/2	5	8	7 5/16	3 3/4	1 1/4	1 3/8	13	11	9 7/8	-	(2) 3/4	*	EPR 9
	122	89	127	203	186	95.25	32	35	330	279	251	-	(2) 20		
FSAFD 217	4 13/16	3 1/2	5	8	7 5/16	3 3/4	1 1/4	1 3/8	13	11	9 7/8	2 1/8	(4) 5/8	*	EPR 9
	122	89	127	203	186	95.25	32	35	330	279	251	54	(4) 16		
SAFD 218	5 1/2	3 7/8	5 3/4	8 11/16	7 3/4	4	1 5/16	1 1/2	13 3/4	11 5/8	10 3/8	-	(2) 3/4	*	EPR 11
	140	98	146	221	197	101.6	33	38	349	295	264	-	(2) 20		
FSAFD 218	5 1/2	3 7/8	5 3/4	8 11/16	7 3/4	4	1 5/16	1 1/2	13 3/4	11 5/8	10 3/8	2 1/8	(4) 5/8	*	EPR 11
	140	98	146	221	197	101.6	33	38	349	295	264	54	(4) 16		
SAFD 220	6	4 3/8	6 1/8	9	8 3/4	4 1/2	1 3/4	1 21/32	15 1/4	13 1/8	11 5/8	-	(2) 7/8	*	EPR 12
	152	111	156	230	222	114.30	44	42	387	333	295	-	(2) 22		
FSAFD 220	6	4 3/8	6 1/8	9	8 3/4	4 1/2	1 3/4	1 21/32	15 1/4	13 1/8	11 5/8	2 3/8	(4) 3/4	*	EPR 12
	152	111	156	230	222	114.30	44	42	387	333	295	60	(4) 20		
SAFD 222	6 7/16	4 3/4	6 1/2	9 1/2	9 5/8	4 15/16	2	1 25/32	16 1/2	14 1/2	12 5/8	2 3/4	(4) 3/4	*	EPR 14
	164	121	165	242	244	125.41	51	45	419	368	321	70	(4) 20		

NOTE: Dimension "S" indicates the shaft length from the centre of the bearing to the end of the shaft for housings with one end closed. For tabulation of the dimension "S", see the bearing tables on pages 52 and 53.

For an example on how to order please see page 143.

Series SAFD 200
Pillow blocks of ductile iron, for bearings with cylindrical bore
d_a 5 5/16 - 9 9/16 in
d_b 4 9/16 - 8 5/16 in

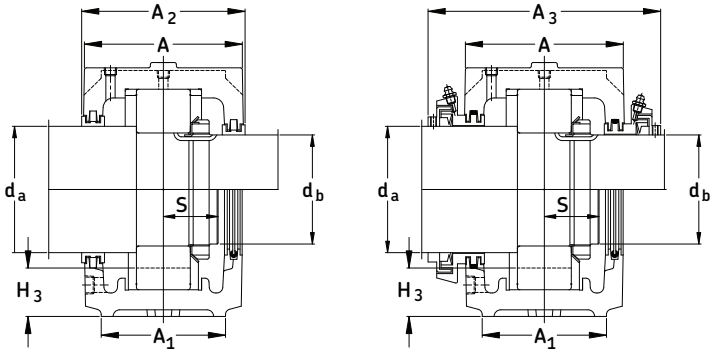

Shaft Dia. d_a	Shaft Dia. d_b	Complete Pillow Block Assembly	Housing	Triple Ring Seal for Shaft Dia. d_a	Triple Ring Seal for Shaft Dia. d_b	Bearing	Lock Nut	Lock Washer	Fixing Rings (2 req'd)	Mass Complete	
in										lb.	kg.
5 5/16	4 9/16	SAFD 22224	SAFD 224	LOR 127	LOR 119	22224 E	AN 24	W 24	FRB 14/215	103	47.0
		SAFD 23224	SAFD 224	LOR 127	LOR 119	23224CC/W33	AN 24	W 24	FRB 5/215	110	50.0
5 7/8	4 15/16	SAFD 22226	SAFD 226	LOR 136	LOR 122	22226 E	AN 26	W 26	FRB 13/230	153	69.0
		SAFD 23226	SAFD 226	LOR 136	LOR 122	23226CC/W33	AN 26	W 26	FRB 5/230	160	72.0
6 1/4	5 5/16	SAFD 22228	SAFD 228	LOR 144	LOR 127	22228CC/W33	AN 28	W 28	FRB 15/250	171	77.0
		SAFD 23228	SAFD 228	LOR 144	LOR 127	23228CC/W33	AN 28	W 28	FRB 5/250	180	82.0
6 5/8	5 3/4	SAFD 22230	SAFD 230	LOR 151	LOR 134	22230CC/W33	AN 30	W 30	FRB 16.5/270	202	92.0
		SAFD 23230	SAFD 230	LOR 151	LOR 134	23230CC/W33	AN 30	W 30	FRB 5/270	216	98.0
7	6 1/16	SAFD 22232	SAFD 232	LOR 156	LOR 142	22232CC/W33	AN 32	W 32	FRB 17/290	230	104
		SAFD 23232	SAFD 232	LOR 156	LOR 142	23232CC/W33	AN 32	W 32	FRB 5/290	244	111
7 7/16	6 7/16	SAFD 22234	SAFD 234	LOR 161	LOR 148	22234CC/W33	AN 34	W 34	36059-34	240	110
		SAFD 23234	SAFD 234	LOR 161	LOR 148	23234CC/W33	AN 34	W 34	35072-34	260	120
7 13/16	6 7/8	SAFD 22236	SAFD 236	LOR 165	LOR 154	22236CC/W33	AN 36	W 36	36059-36	313	142
		SAFD 23236	SAFD 236	LOR 165	LOR 154	23236CC/W33	AN 36	W 36	35072-36	336	153
8 3/8	7 1/4	SAFD 22238	SAFD 238	LOR 171	LOR 160	22238CC/W33	AN 38	W 38	36059-38	355	161
		SAFD 23238	SAFD 238	LOR 171	LOR 160	23238CC/W33	AN 38	W 38	35072-38	381	173
8 3/4	7 5/8	SAFD 22240	SAFD 240	LOR 175	LOR 164	22240CC/W33	AN 40	W 40	36059-40	442	200
		SAFD 23240	SAFD 240	LOR 175	LOR 164	23240CC/W33	AN 40	W 40	35072-40	473	214
9 9/16	8 5/16	SAFD 22244	SAFD 244	LOR 179	LOR 170	22244CC/W33	N 44	W 44	36059-44	582	264
		SAFD 23244	SAFD 244	LOR 179	LOR 170	23244CC/W33	N 44	W 44	35072-44	627	285

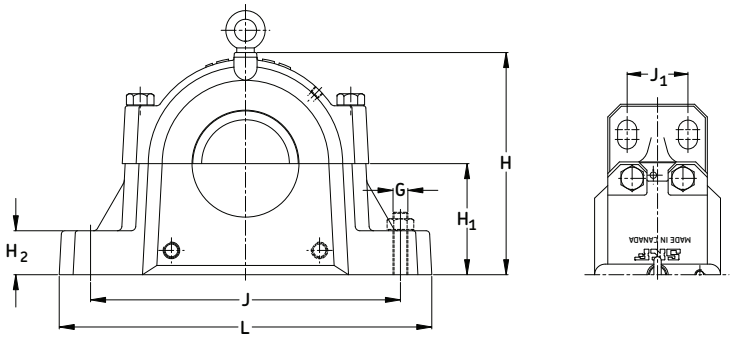

Housing No.	Dimensions							Static Oil Level					Bolts (req'd)		End Plug
	A	A_1	A_2	A_3	H	H_1	H_2	H_3	L	J_{max}	J_{min}	J_1	G	S	
	in/mm														
SAFD 224	7 1/8	4 3/4	7 3/8	10 5/16	10 1/4	5 1/4	2 1/8	1 27/32	16 1/2	14 1/2	13 1/4	2 3/4	(4) 3/4	*	EPR 15
	181	121	187	262	260	133.35	54	47	419	368	337	70	(4) 20		
SAFD 226	7 3/4	5 1/8	8	11	11 3/4	6	2 3/8	2 11/32	18 3/8	16	14 5/8	3 1/4	(4) 7/8	*	EPR 27
	197	130	203	280	298	152.40	60	59	467	406	371	83	(4) 22		
SAFD 228	7 3/8	5 7/8	7 5/8	11	11 3/4	6	2 3/8	2 1/32	20 1/8	17 1/8	16	3 3/8	(4) 1	*	EPR 16
	187	149	194	280	298	152.40	60	52	511	435	406	86	(4) 24		
SAFD 230	8 1/8	6 1/4	8 3/8	11 3/8	12 1/2	6 5/16	2 1/2	2	21 1/4	18 1/4	17	3 3/4	(4) 1	*	EPR 17
	206	159	213	289	318	160.34	64	51	540	464	432	95	(4) 24		
SAFD 232	8 1/2	6 1/4	8 3/4	11 3/4	13 5/16	6 11/16	2 5/8	2 1/16	22	19 1/4	17 3/8	3 3/4	(4) 1	*	EPR 18
	216	159	222	299	338	169.86	67	52	559	489	441	95	(4) 24		
SAFD 234	9 1/4	6 3/4	9 5/8	12 1/2	14 3/16	7 1/16	2 3/4	2 5/32	24 3/4	21 5/8	19 3/8	4 1/4	(4) 1	*	EPR 19
	235	171	244	318	360	179.39	70	55	629	549	492	108	(4) 24		
SAFD 236	9 5/8	7 1/8	10	13	14 7/8	7 1/2	3	2 3/8	26 3/4	23 5/8	20 7/8	4 5/8	(4) 1	*	EPR 20
	244	181	254	330	378	190.50	76	60	679	600	530	117	(4) 24		
SAFD 238	10 1/2	7 1/2	10 3/4	13 3/4	15 13/16	7 7/8	3 1/8	2 7/16	28	24 3/8	21 5/8	4 1/2	(4) 1 1/4	*	EPR 21
	267	191	273	349	402	200.03	79	62	711	619	549	114	(4) 30		
SAFD 240	11	8	11 1/4	14 1/4	16 1/2	8 1/4	3 3/8	2 15/32	29 1/2	25	22 1/2	5	(4) 1 1/4	*	EPR 22
	279	203	286	362	419	209.55	86	63	749	635	572	127	(4)30		
SAFD 244	11 3/4	8 3/4	12	15	18 3/4	9 1/2	3 3/4	3 1/8	32 3/4	27 7/8	24 3/4	5 1/4	(4) 1 1/2	*	EPR 24
	298	222	305	381	476	241	95	79	832	708	629	133	(4) 36		

NOTE: Dimension "S" indicates the shaft length from the centre of the bearing to the end of the shaft for housings with one end closed. For tabulation of the dimension "S", see the bearing tables on pages 52 and 53.

For an example on how to order please see page 143.

Pillow Block Housings

SAF, FSAF, SAFS, FSAFS

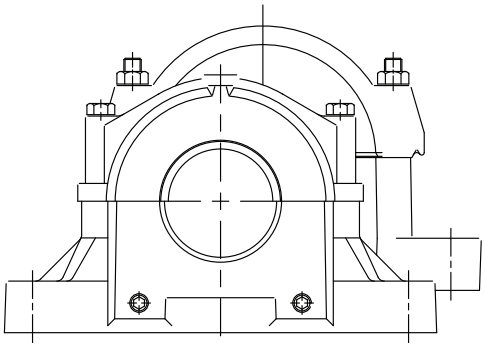

MATERIAL	SAF cast iron ASTM A48 grade 35 SAFS cast steel ASTM A27 grade 65-35
BEARING SERIES USED	12K, 12EK, 13K, 13EK, 222CCK, 222EK, 223CCK, 230CCK, 230CACK, C 22K, C 23K
SHAFT SIZE RANGE	1-3/8" to 10-1/2"
PILLOW BLOCK SIZE	024 - 056 (adapter mounting) 507 - 544 (adapter mounting) 609 - 640 (adapter mounting)
PILLOW BLOCK LUBRICATION	Grease or Oil
STANDARD SEALS	LER 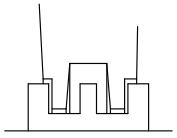 LOR & LORP 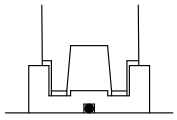
OPTIONAL SEALS	LOR + Contact element B-10724-xxx or B-10785-xxx 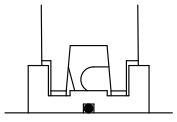 TER 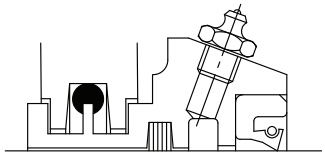 TER-V 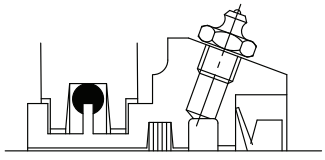 TER-C 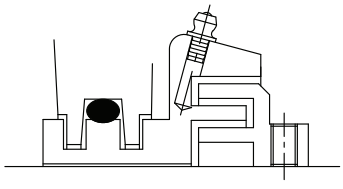 TER-CV 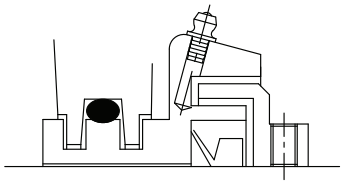

Note : Consult SKF for availability of Metric LOR seals.

SAF Split Pillow Blocks Nomenclature Adapter Mounting

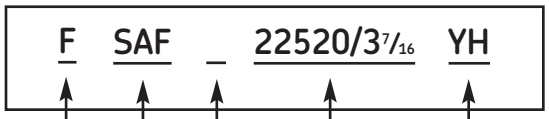

Base	
0	Two bolt
F**	Four bolt (for cast iron)
Basic Design	
Material	
0	Cast iron (standard)
S	Cast steel
Size	
	Bearing bore 20 = 100mm
	Shaft diameter 3 7/16
Suffixes	
0	Standard triple ring seals (included)*
-11	4 bolt base for cast steel blocks, i.e. SAFS 22520/3 7/16 - 11
C	Taconite service seal TER..C of Canadian design (1/pkg)
CV	Taconite service seal TER..CV of Canadian design c/w V ring (1/pkg)
H	Held bearing c/w fixing rings (included)*
HH	Option for a held bearing with 2 fixing rings where normally one is used (centres bearing)
K7	Tighter housing fit, can be used with CARB® bearings for high speeds or vibration
T	Taconite seal TER of American design
TLC	Combination of LOR and B-10724-xxx contact element (max temp. 120ºC)
TLP	LORP with B-10785-xxx contact element for higher temperatures and speeds. (max. temp. 200ºC)
TV	Taconite service seal TER..V of American design c/w V ring
Y	One end closed with end cover or end plug

Note:

* SAF housings include the seals, fixing rings and a grease nipple for the 222 series bearings on standard shaft sizes (shown as highlighted in the tables). If non-standard shaft sizes or bearings other than the 222 series are required, seals and/or fixing rings must be ordered separately

** Sizes 618, 522 and above are standard with 4 bolt bases. Prefix "F" not required

How to order SAF: (Example)

When you order one SAF 22520-3 7/16 you will receive the following:

1 - Pillow block housing SAF 520: Cap drilled and tapped with two holes 1/4" NPT, with grease fitting included
Base drilled, tapped and plugged with two diagonally opposed 1/2" NPT holes.
2 - Triple ring seals LOR 102
1 - Bearing SKF 22220 EK
1 - Adapter sleeve HA 320 for shaft dia. 3 7/16"

If a "HELD or FIXED" unit is required, add the suffix "H" and 1 fixing ring (locating or stabilizing) SR 20-17 will be included.
Only one bearing per shaft should be held. CARB bearings displace internally and are therefore always "FREE".
However, they must always be located in the housing with fixing rings as does a true "FIXED" bearing.
If one end is closed add letter "Y" and an EPR 12 end cover will also be included.

Series SAF
Pillow block of cast iron for bearings with adapter sleeves, grease or oil lubrication
d_a 1 3/16 - 1 3/4 in

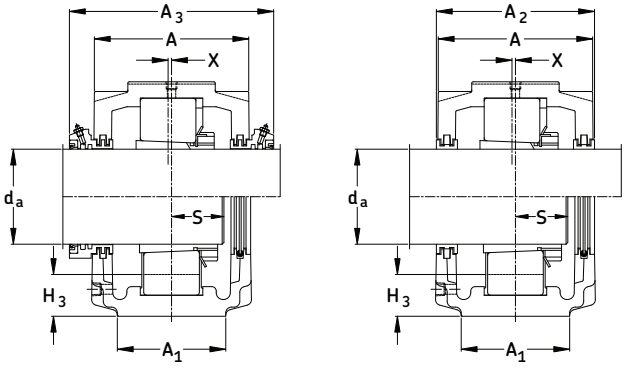

Shaft Dia. d_a	Complete Pillow Block Assembly	Housing	Triple Ring Seal***	Taconite Seal	Bearing	Adapter Sleeve	Fixing Rings	Qty.	Mass Complete		End Cover
in									lb.	kg.	
1 3/16 [1]	SAF 1507/ 1 3/16	SAF 507	LER 14	TER 14	1207 EK	HA 207	SR 7-6	1	7.00	3.2	EPR 2
	SAF 22507/1 3/16	SAF 507	LER 14	TER 14	22207 EK	HA 307	36053-6	1	8.00	3.6	EPR 2
	SAF C2507/1 3/16	SAF 507	LER 14	TER 14	C2207 EK*	HA 307E	36053-6	1	8.00	3.6	EPR 2
1 7/16 [1]	SAF 1509/ 1 7/16	SAF 509	LER 17	TER 17	1209 EK	HA 209	SR 9-0	1	12.0	5.4	EPR 3
	SAF 1609/ 1 7/16	SAF 609	LER 17	TER 17	1309 EK	HA 309	SR 1609	2	19.0	8.6	EPR 3
	SAF 22509/ 1 7/16	SAF 509	LER 17	TER 17	22209 EK	HA 309	SR 9-9	1	12.0	5.4	EPR 3
	SAF C2509/ 1 7/16	SAF 509	LER 17	TER 17	C2209 EK*	HA 309E	SR 9-9	1	12.0	5.4	EPR 3
	SAF 22609/ 1 7/16	SAF 609	LER 17	TER 17	22309 EK	HA 2309	SR 11-9	1	20.0	9.1	EPR 3
1 1/2	SAF 1509/ 1 1/2	SAF 509	LER 18	TER 18	1209 EK	HE 209	SR 9-0	1	11.0	5.0	EPR 3
	SAF 1609/ 1 1/2	SAF 609	LER 18	TER 18	1309 EK	HE 309	SR 1609	2	18.0	8.2	EPR 3
	SAF 22509/ 1 1/2	SAF 509	LER 18	TER 18	22209 EK	HE 309	SR 9-9	1	12.0	5.4	EPR 3
	SAF C2509/ 1 1/2	SAF 509	LER 18	TER 18	C2209 EK*	HE 309E	SR 9-9	1	12.0	5.4	EPR 3
	SAF 22609/ 1 1/2	SAF 609	LER 18	TER 18	22309 EK	HE 2309	SR 11-9	1	20.0	9.1	EPR 3
1 11/16 [1]	SAF 1510/ 1 11/16	SAF 510	LER 20	TER 20	1210 EK	HA 210	SR 10-8	1	11.0	5.0	EPR 4
	SAF 1610/ 1 11/16	SAF 610	LER 20	TER 20	1310 EK	HA 310	SR 1610	2	21.0	9.5	EPR 4
	SAF 22510/ 1 11/16	SAF 510	LER 20	TER 20	22210 EK	HA 310	SR 10-0	1	11.5	5.2	EPR 4
	SAFC2510/ 1 11/16	SAF 510	LER 20	TER 20	C2210 EK*	HA 310E	SR 10-0	1	11.5	5.2	EPR 4
	SAF 22610/ 1 11/16	SAF 610	LER 20	TER 20	22310 EK	HA 2310	SR 0-10	1	22.0	10.0	EPR 4
1 3/4	SAF 1510/ 1 3/4	SAF 510	LER 21	TER 21	1210 EK	HE 210	SR 10-8	1	11.0	5.0	EPR 4
	SAF 1610/ 1 3/4	SAF 610	LER 21	TER 21	1310 EK	HE 310	SR 1610	2	21.0	9.5	EPR 4
	SAF 22510/ 1 3/4	SAF 510	LER 21	TER 21	22210 EK	HE 310	SR 10-0	1	11.5	5.2	EPR 4
	SAF C2510/ 1 3/4	SAF 510	LER 21	TER 21	C2210 EK*	HE 310E	SR 10-0	1	11.5	5.2	EPR 4
	SAF 22610/ 1 3/4	SAF 610	LER 21	TER 21	22310 EK	HE 2310	SR 0-10	1	22.0	10.0	EPR 4

[1] The highlighted sizes contain seals, which are included in that housing, optional shaft sizes require additional seals.

* Must always be located.

*** If seals for metric shafting are required, please check SKF for availability.

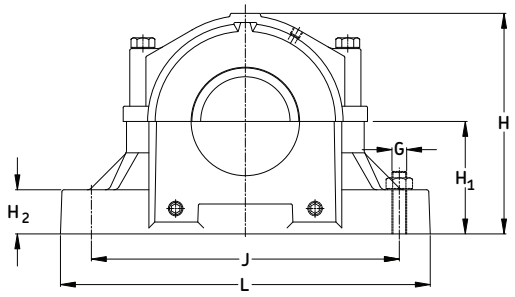

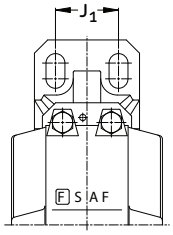

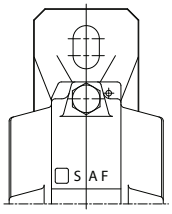

Housing No.	Dimensions						Static Oil Level H_3								Bolts (req'd)
	A_1	A_2	A_3	H	H_1	H_2	Roller Bearing	Ball Bearing	J_{max}	J_{min}	J_1	L	X	S	G
	in/mm														
SAF 507	2	3 1/4	-	3 53/64	2	13/16	7/8	7/8	6 1/8	5 5/8	-	7 1/2	5/64	*	(2) 3/8
	50.8	82.6	-	98.8	50.80	20.6	22	22	155.6	142.9	-	190.5	1.8	*	(2) 10
SAF 509	2 3/8	3 5/8	6 1/16	4 7/16	2 1/4	13/16	31/32	1	7	6 1/4	-	8 1/4	7/64	*	(2) 1/2
	60.3	92.1	154	112.7	57.15	20.6	24.6	25.4	177.8	158.8	-	209.6	2.8	*	(2) 12
SAF 609	2 3/4	4 1/4	6 3/4	5 5/16	2 3/4	1	1 9/32	1 5/16	7 7/8	7 3/8	-	9 5/8	3/16	*	(2) 5/8
	69.8	108.0	171.5	134.9	69.85	25.4	32.5	33.3	200.0	187.3	-	244.5	4.76	*	(2) 16
SAF 510	2 3/8	3 5/8	6 1/2	4 13/16	2 1/2	15/16	1 3/32	1 1/8	7	6 1/2	-	8 1/4	3/16	*	(2) 1/2
	60.3	92.1	165.1	122	63.50	23.8	27.8	28.6	177.8	165.1	-	209.6	4.76	*	(2) 12
SAF 610	2 3/4	4 5/8	7 1/2	5 13/16	3	1 1/8	1 3/8	1 7/16	9	7 3/4	-	10 5/8	3/16	*	(2) 5/8
	69.8	117.5	190.5	147.6	76.20	28.6	34.9	36.5	228.6	196.8	-	269.9	4.76	*	(2) 16

NOTE: Dimension "S" indicates the shaft length from centre of bearing to end of shaft for housings with one end closed.
For tabulation of dimension "S" See bearing tables on pages 52 and 53.

For an example on how to order, please see page 149.

Series SAF
Pillow block of cast iron for bearings with adapter sleeves, grease or oil lubrication
d_a 1 15/16 - 2 1/4 in

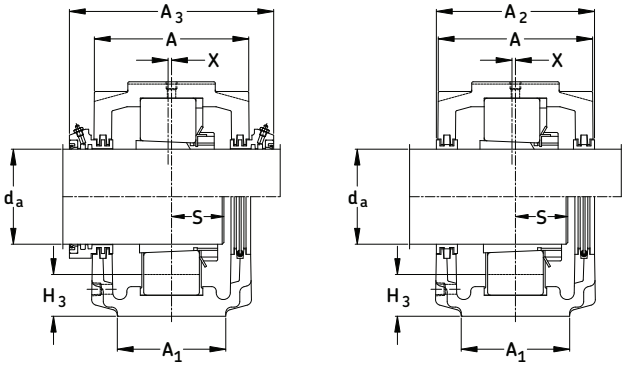

Shaft Dia. d_a	Complete Pillow Block Assembly**	Housing	Triple Ring Seal***	Taconite Seal	Bearing	Adapter Sleeve	Fixing Rings	Qty.	Mass Complete		End Cover
in									lb.	kg.	
1 15/16 [1]	SAF 1511/ 1 15/16	SAF 511	LER 24	TER 24	1211 EK	HA 211	SR 11-9	1	13.0	5.9	EPR 5
	(F)SAF 1611/ 1 15/16	(F)SAF 611	LER 24	TER 24	1311 EK	HA 311	SR 1611	2	25.0	11.3	EPR 5
	SAF 22511/ 1 15/16	SAF 511	LER 24	TER 24	22211 EK	HA 311	SR 11-0	1	13.5	6.1	EPR 5
	SAF C2511/ 1 15/16	SAF 511	LER 24	TER 24	C2211 EK *	HA 311E	SR 11-0	1	13.5	6.1	EPR 5
	(F)SAF 22611/ 1 15/16	(F)SAF 611	LER 24	TER 24	22311 EK	HA 2311	SR 13-11	1	27.0	12.2	EPR 5
2	SAF 1511/2	SAF 511	LER 25	TER 25	1211 EK	HE 211B	SR 11-9	1	13.0	5.9	EPR 5
	(F)SAF 1611/2	(F)SAF 611	LER 25	TER 25	1311 EK	HE 311B	SR 1611	2	25.0	11.3	EPR 5
	SAF 22511/2	SAF 511	LER 25	TER 25	22211 EK	HE 311B	SR 11-0	1	13.5	6.1	EPR 5
	SAF C2511/2	SAF 511	LER 25	TER 25	C2211 EK *	HE 311BE [2]	SR 11-0	1	13.5	6.1	EPR 5
	(F)SAF 22611/2	(F)SAF 611	LER 25	TER 25	22311 EK	HE 2311B	SR 13-11	1	27.0	12.2	EPR 5
2 3/16 [1]	SAF 1513/ 2 3/16	SAF 513	LER 29	TER 29	1213 EK	HA 213	SR 13-0	2	20.0	9.1	EPR 6
	(F)SAF 1613/ 2 3/16	(F)SAF 613	LOR 32	TER 32	1313 EK	HA 313	SR 1613	2	36.0	16.3	EPR 7
	SAF 22513/ 2 3/16	SAF 513	LER 29	TER 29	22213 EK	HA 313	SR 13-0	1	21.0	9.5	EPR 6
	SAF C2513/ 2 3/16	SAF 513	LER 29	TER 29	C2213 EK *	HA 313E	SR 13-0	1	21.0	9.5	EPR 6
	(F)SAF 22613/ 2 3/16	(F)SAF 613	LOR 32	TER 32	22313 EK	HA 2313	SR 16-13	1	39.0	17.7	EPR 7
2 1/4	SAF 1513/ 2 1/4	SAF 513	LER 30	TER 30	1213 EK	HE 213	SR 13-0	2	20.0	9.1	EPR 6
	(F)SAF 1613/ 2 1/4	(F)SAF 613	LOR 33	TER 33	1313 EK	HE 313	SR 1613	2	36.0	16.3	EPR 7
	SAF 22513/ 2 1/4	SAF 513	LER 30	TER 30	22213 EK	HE 313	SR 13-0	1	21.0	9.5	EPR 6
	SAF C2513/ 2 1/4	SAF 513	LER 30	TER 30	C2213 EK *	HE 313E	SR 13-0	1	21.0	9.5	EPR 6
	(F)SAF 22613/ 2 1/4	(F)SAF 613	LOR 33	TER 33	22313 EK	HE 2313	SR 16-13	1	39.0	17.7	EPR 7

[1] The highlighted sizes contain seals, which are included in that housing, optional shaft sizes require additional seals.

[2] This sleeve has non standard Whitworth threads. The KMFE locknut, normally used to accommodate CARB bearing, is not available in this thread configuration. A spacer with dimensions of 55 X 66 X 3 mm will be included to use with the standard KM 11 locknut.

* Must always be located.

** (F)SAF = either a 2 or 4 bolt base. Sizes 618, 522 and above are standard with 4 bolt bases. Prefix "F" not required.

*** If seals for metric shafting are required, please check SKF for availability.

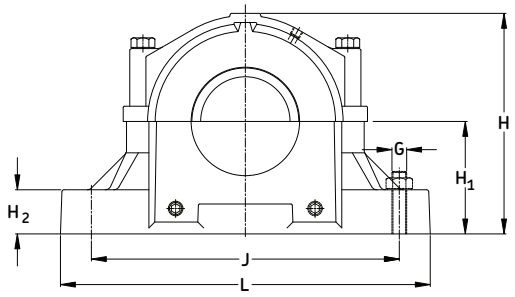

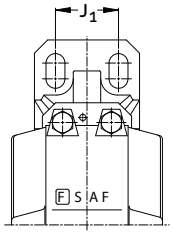

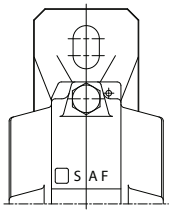

Housing No.	Dimensions						Static Oil Level H_3								Bolts (req'd)
	A_1	A_2	A_3	H	H_1	H_2	Roller Bearing	Ball Bearing	J_{max}	J_{min}	J_1	L	X	S	G
	in/mm														
SAF 511	2 3/4	3 7/8	6 3/4	5 15/64	2 3/4	15/16	1 3/16	1 1/4	7 7/8	7 3/8	-	9 5/8	3/16	*	(2) 5/8
	69.8	98.4	171.4	132.9	69.85	23.8	30.2	31.8	200	187.3	-	244.5	4.76	*	(2) 16
SAF 611	3 1/8	4 7/8	7 3/4	6 3/16	3 1/4	1 3/16	1 1/2	1 7/16	9 1/2	8 1/8	-	11	3/16	*	(2) 5/8
	79.4	123.8	196.8	157.2	82.60	30.2	38.1	36.5	241.3	206.4	-	279.4	4.76	*	(2) 16
FSAF 611	3 1/8	4 7/8	7 3/4	6 3/16	3 1/4	1 3/16	1 1/2	1 7/16	9 1/2	8 1/8	2	11	3/16	*	(4) 1/2
	79.4	123.8	196.8	157.2	82.60	30.2	38.1	36.5	241.3	206.4	50.8	279.4	4.76	*	(4) 12
SAF 513	3 1/8	4 1/2	7 1/4	5 13/16	3	1	1 3/32	1 3/16	9 1/2	8 1/8	-	11	0.157	*	(2) 5/8
	79.4	114.3	184.2	147.7	76.20	25.4	27.8	30.2	241.3	206.4	-	279.4	3.99	*	(2) 16
SAF 613	3 1/2	5 5/16	8 1/4	6 19/32	3 1/2	1 1/4	1 13/32	1 7/16	11	9 5/8	-	13	3/16	*	(2) 3/4
	88.9	134.9	209.6	167.5	88.90	31.8	35.7	36.5	279.4	244.5	-	330.2	4.76	*	(2) 20
FSAF 613	3 1/2	5 5/16	8 1/4	6 19/32	3 1/2	1 1/4	1 13/32	1 7/16	11	9 5/8	2 1/8	13	3/16	*	(4) 5/8
	88.9	134.9	209.6	167.5	88.90	31.8	35.7	36.5	279.4	244.5	54.0	330.2	4.76	*	(4) 16

NOTE: Dimension "S" indicates the shaft length from centre of bearing to end of shaft for housings with one end closed.
For tabulation of dimension "S" See bearing tables on pages 52 and 53.

For an example on how to order, please see page 149.

Series SAF
Pillow block of cast iron for bearings with adapter sleeves, grease or oil lubrication
d_a 2 7/16 - 2 11/16 in

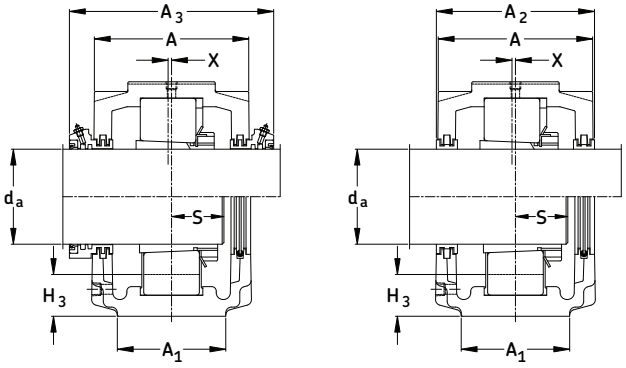

Shaft Dia. d_a	Complete Pillow Block Assembly**	Housing	Triple Ring Seal***	Taconite Seal	Bearing	Adapter Sleeve	Fixing Rings	Qty.	Mass Complete		End Cover
in									lb.	kg.	
2 7/16 [1]	(F)SAF 1515/ 2 7/16	(F)SAF 515	LOR 37	TER 37	1215 K	HA 215	SR 15-0	2	24.0	10.9	EPR 7
	(F)SAF 1615/ 2 7/16	(F)SAF 615	LOR 37	TER 37	1315 K	HA 315	SR 1615	2	51.0	23.1	EPR 7
	(F)SAF 22515/ 2 7/16	(F)SAF 515	LOR 37	TER 37	22215 EK	HA 315	SR 15-0	1	24.0	10.9	EPR 7
	(F)SAF C2515/ 2 7/16	(F)SAF 515	LOR 37	TER 37	C2215 EK*	HA 315E	SR 15-0	1	24.0	10.9	EPR 7
	(F)SAF 22615/ 2 7/16	(F)SAF 615	LOR 37	TER 37	22315 EK	HA 2315	SR 18-15	1	55.0	24.9	EPR 7
	(F)SAF C2615/ 2 7/16	(F)SAF 615	LOR 37	TER 37	C2315 EK*	HA 2315	SR 18-15	1	55.0	24.9	EPR 7
2 1/2	(F)SAF 1515/ 2 1/2	(F)SAF 515	LOR 38	TER 38	1215 K	HE 215	SR 15-0	2	24.0	10.9	EPR 7
	(F)SAF 1615/ 2 1/2	(F)SAF 615	LOR 38	TER 38	1315 K	HE 315	SR 1615	2	51.0	23.1	EPR 7
	(F)SAF 22515/ 2 1/2	(F)SAF 515	LOR 38	TER 38	22215 EK	HE 315	SR 15-0	1	24.0	10.9	EPR 7
	(F)SAF C2515/ 2 1/2	(F)SAF 515	LOR 38	TER 38	C2215 EK*	HE 315E	SR 15-0	1	24.0	10.9	EPR 7
	(F)SAF 22615/ 2 1/2	(F)SAF 615	LOR 38	TER 38	22315 EK	HE 2315	SR 18-15	1	55.0	24.9	EPR 7
	(F)SAF C2615/ 2 1/2	(F)SAF 615	LOR 38	TER 38	C2315 EK *	HE 2315	SR 18-15	1	55.0	24.9	EPR 7
2 11/16 [1]	(F)SAF 1516/ 2 11/16	(F)SAF 516	LOR 44	TER 44	1216 K	HA 216	SR 1516	2	31.0	14.1	EPR 8
	(F)SAF 1616/ 2 11/16	(F)SAF 616	LOR 44	TER 44	1316 K	HA 316	SR 1616	2	60.0	27.2	EPR 8
	(F)SAF 22516/ 2 11/16	(F)SAF 516	LOR 44	TER 44	22216 EK	HA 316	SR 16-13	1	32.0	14.5	EPR 8
	(F)SAF C2516/ 2 11/16	(F)SAF 516	LOR 44	TER 44	C2216 EK *	HA 316E	SR 16-13	1	32.0	14.5	EPR 8
	(F)SAF 22616/ 2 11/16	(F)SAF 616	LOR 44	TER 44	22316 EK	HA 2316	SR 19-16	1	66.0	29.9	EPR 8
	(F)SAF C2616/ 2 11/16	(F)SAF 616	LOR 44	TER 44	C2316 EK *	HA 2316	SR 19-16	1	66.0	29.9	EPR 8

[1] The highlighted sizes contain seals, which are included in that housing, optional shaft sizes require additional seals.

* Must always be located.

** (F)SAF = either a 2 or 4 bolt base. Sizes 618, 522 and above are standard with 4 bolt bases. Prefix "F" not required.

*** If seals for metric shafting are required, please check SKF for availability.

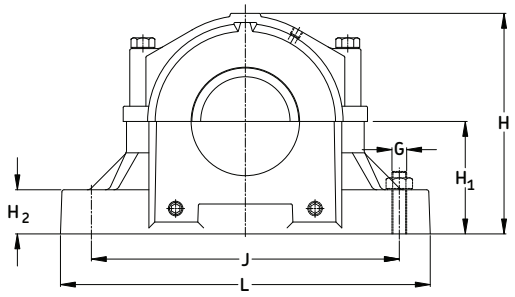

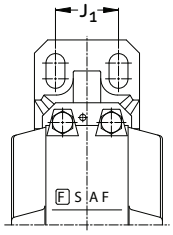

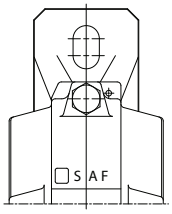

Housing No.	Dimensions						Static Oil Level H_3								Bolts (req'd)
	A_1	A_2	A_3	H	H_1	H_2	Roller Bearing	Ball Bearing	J_{max}	J_{min}	J_1	L	X	S	G
	in/mm														
SAF 515	3 1/8	4 11/16	7 5/8	6 13/64	3 1/4	1 1/8	1 1/8	1 1/4	9 5/8	8 5/8	-	11 1/4	0.118	*	(2) 5/8
	79.4	119.1	193.7	157.6	82.55	28.6	28.6	31.8	244.5	219.1	-	285.8	3.00	*	(2) 16
FSAF 515	3 1/8	4 11/16	7 5/8	6 13/64	3 1/4	1 1/8	1 1/8	1 1/4	9 5/8	8 5/8	1 7/8	11 1/4	0.118	*	(2) 5/8
	79.4	119.1	193.7	157.6	82.55	28.6	28.6	31.8	244.5	219.1	47.6	285.8	3.00	*	(2) 16
SAF 615	3 7/8	5 7/8	8 11/16	7 9/16	4	1 5/8	1 19/32	1 11/16	11 5/8	10 3/8	-	13 3/4	3/16	*	(2) 3/4
	98.4	149.2	220.6	192.1	101.60	41.3	40.5	42.9	295.3	263.5	-	349.2	4.76	*	(2) 20
FSAF 615	3 7/8	5 5/8	8 11/16	7 9/16	4	1 5/8	1 19/32	1 11/16	11 5/8	10 3/8	2 1/8	13 3/4	3/16	*	(4) 5/8
	98.4	149.2	220.6	192.1	101.60	41.3	40.5	42.9	295.3	263.5	54.0	349.2	4.76	*	(4) 16
SAF 516	3 1/2	5 5/16	8 1/4	6 11/16	3 1/2	1 1/4	1 1/4	1 5/16	11	9 5/8	-	13	3/16	*	(2) 3/4
	88.9	134.9	209.6	169.8	88.90	31.8	31.8	33.3	279.4	244.5	-	330.2	4.76	*	(2) 20
FSAF 516	3 1/2	5 5/16	8 1/4	6 11/16	3 1/2	1 1/4	1 1/4	1 5/16	11	9 5/8	2 1/8	13	3/16	*	(4) 5/8
	88.9	134.9	209.6	169.8	88.90	31.8	31.8	33.3	279.4	244.5	54.0	330.2	4.76	*	(4) 16
SAF 616	3 7/8	6 1/2	9 3/16	8 1/4	4 1/4	1 3/4	1 11/16	1 13/16	12 5/8	10 5/8	-	14 1/4	3/16	*	(2) 3/4
	98.4	165.1	233.4	209.6	108.00	44.4	42.9	46.0	320.7	269.9	-	362.0	4.76	*	(2) 20
FSAF 616	3 7/8	6 1/2	9 3/16	8 1/4	4 1/4	1 3/4	1 11/16	1 13/16	12 5/8	10 5/8	2 1/8	14 1/4	3/16	*	(4) 5/8
	98.4	165.1	233.4	209.6	108.00	44.4	42.9	46.0	320.7	269.9	54.0	362.0	4.76	*	(4) 16

NOTE: Dimension "S" indicates the shaft length from centre of bearing to end of shaft for housings with one end closed.
For tabulation of dimension "S" See bearing tables on pages 52 and 53.

For an example on how to order, please see page 149.

Series SAF
Pillow block of cast iron for bearings with adapter sleeves, grease or oil lubrication
d_a 2 3/4 - 3 in

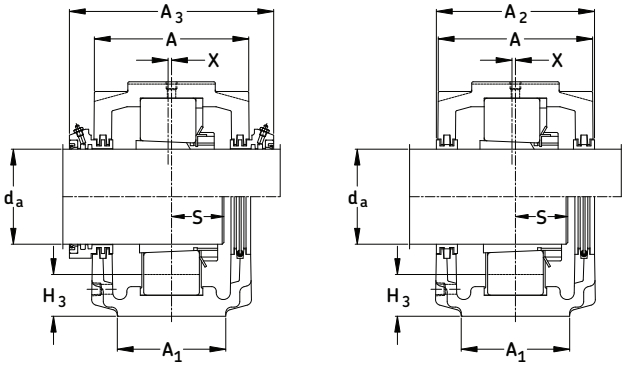

Shaft Dia. d_a	Complete Pillow Block Assembly**	Housing	Triple Ring Seal***	Taconite Seal	Bearing	Adapter Sleeve	Fixing Rings	Qty.	Mass Complete		End Cover
in									lb.	kg.	
2 3/4	(F)SAF 1516/ 2 3/4	(F)SAF 516	LOR 45	TER 45	1216 K	HE 216	SR 1516	2	31.0	14.1	EPR 8
	(F)SAF 1616/ 2 3/4	(F)SAF 616	LOR 45	TER 45	1316 K	HE 316	SR 1616	2	60.0	27.2	EPR 8
	(F)SAF 22516/ 2 3/4	(F)SAF 516	LOR 45	TER 45	22216 EK	HE 316	SR 16-13	1	32.0	14.5	EPR 8
	(F)SAF C2516/ 2 3/4	(F)SAF 516	LOR 45	TER 45	C2216 EK*	HE 316E	SR 16-13	1	32.0	14.5	EPR 8
	(F)SAF 22616/ 2 3/4	(F)SAF 616	LOR 45	TER 45	22316 EK	HE 2316	SR 19-16	1	66.0	29.9	EPR 8
	(F)SAF C2616/ 2 3/4	(F)SAF 616	LOR 45	TER 45	C2316 EK *	HE 2316	SR 19-16	1	66.0	29.9	EPR 8
2 15/16 [1]	(F)SAF 1517/ 2 15/16	(F)SAF 517	LOR 53	TER 53	1217 K	HA 217	SR 1517	2	33.0	15.0	EPR 9
	(F)SAF 1617/ 2 15/16	(F)SAF 617	LOR 184	TER 184	1317 K	HA 317	SR 1617	2	69.0	31.3	EPR 10
	(F)SAF 22517/ 2 15/16	(F)SAF 517	LOR 53	TER 53	22217 EK	HA 317	SR 17-14	1	35.0	15.9	EPR 9
	(F)SAF C2517/ 2 15/16	(F)SAF 517	LOR 53	TER 53	C2217 EK *	HA 317E	SR 17-14	1	35.0	15.9	EPR 9
	(F)SAF 22617/ 2 15/16	(F)SAF 617	LOR 184	TER 184	22317 EK	HA 2317	SR 20-17	1	75.0	34.0	EPR 10
	(F)SAF C2617/ 2 15/16	(F)SAF 617	LOR 184	TER 184	C2317 EK *	HA 2317	SR 20-17	1	75.0	34.0	EPR 10
3	(F)SAF 1517/3	(F)SAF 517	LOR 54	TER 54	1217 K	HE 217	SR 1517	2	33.0	15.0	EPR 9
	(F)SAF 1617/3	(F)SAF 617	LOR 185	TER 185	1317 K	HE 317	SR 1617	2	69.0	31.3	EPR 10
	(F)SAF 22517/3	(F)SAF 517	LOR 54	TER 54	22217 EK	HE 317	SR 17-14	1	35.0	15.9	EPR 9
	(F)SAF C2517/3	(F)SAF 517	LOR 54	TER 54	C2217 EK *	HE 317E	SR 17-14	1	35.0	15.9	EPR 9
	(F)SAF 22617/3	(F)SAF 617	LOR 185	TER 185	22317 EK	HE 2317	SR 20-17	1	75.0	34.0	EPR 10
	(F)SAFC2617/3	(F)SAF 617	LOR 185	TER 185	C2317 EK *	HE 2317	SR 20-17	1	75.0	34.0	EPR 10

[1] The highlighted sizes contain seals, which are included in that housing, optional shaft sizes require additional seals.

* Must always be located.

** (F)SAF = either a 2 or 4 bolt base. Sizes 618, 522 and above are standard with 4 bolt bases. Prefix "F" not required.

*** If seals for metric shafting are required, please check SKF for availability.

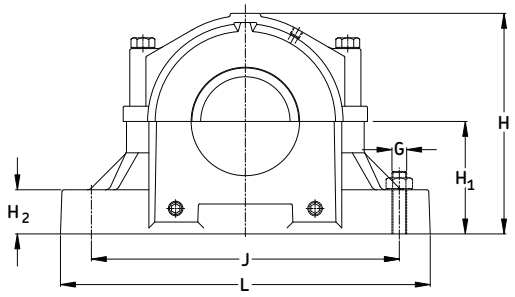

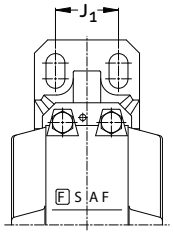

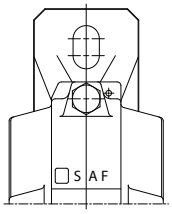

Housing No.	Dimensions						Static Oil Level H_3								Bolts (req'd)
	A_1	A_2	A_3	H	H_1	H_2	Roller Bearing	Ball Bearing	J_{max}	J_{min}	J_1	L	X	S	G
	in/mm														
SAF 516	3 1/2	5 5/16	8 1/4	6 11/16	3 1/2	1 1/4	1 1/4	1 5/16	11	9 5/8	-	13	3/16	*	(2) 3/4
	88.9	134.9	209.6	169.9	88.90	31.8	31.8	33.3	279.4	244.5	-	330.2	4.76	*	(2) 20
FSAF 516	3 1/2	5 5/16	8 1/4	6 11/16	3 1/2	1 1/4	1 1/4	1 5/16	11	9 5/8	2 1/8	13	3/16	*	(4) 5/8
	88.9	134.9	209.6	169.9	88.90	31.8	31.8	33.3	279.4	244.5	54.0	330.2	4.76	*	(4) 16
SAF 616	3 7/8	6 1/2	9 3/16	8 1/4	4 1/4	1 3/4	1 11/16	1 13/16	12 5/8	10 5/8	-	14 1/4	3/16	*	(2) 3/4
	98.4	165.1	233.4	209.6	107.95	44.5	42.9	46.0	320.7	269.9	-	362.0	4.76	*	(2) 20
FSAF 616	3 7/8	6 1/2	9 3/16	8 1/4	4 1/4	1 3/4	1 11/16	1 13/16	12 5/8	10 5/8	2 1/8	14 1/4	3/16	*	(4) 5/8
	98.4	165.1	233.4	209.6	107.95	44.5	42.9	46.0	320.7	269.9	54.0	362.0	4.76	*	(4) 16
SAF 517	3 1/2	5	7 13/16	7 1/8	3 3/4	1 1/4	1 3/8	1 15/32	11	9 7/8	-	13	3/16	*	(2) 3/4
	88.9	127.0	198.4	181.0	95.25	31.8	34.9	37.3	279.4	250.8	-	330.2	4.76	*	(2) 20
FSAF 517	3 1/2	5	7 13/16	7 1/8	3 3/4	1 1/4	1 3/8	1 15/32	11	9 7/8	2 1/8	13	3/16	*	(4) 5/8
	88.9	127.0	198.4	181.0	95.25	31.8	34.9	37.3	279.4	250.8	54.0	330.2	4.76	*	(4) 16
SAF 617	4 3/8	6 3/4	9 1/8	8 3/4	4 1/2	1 3/4	1 3/4	1 7/8	13 1/8	11 5/8	-	15 1/4	3/16	*	(2) 7/8
	111.1	171.5	231.8	222.3	114.30	44.5	44.5	47.6	333.4	295.3	-	387.4	4.76	*	(2) 22
FSAF 617	4 3/8	6 3/4	9 1/8	8 3/4	4 1/2	1 3/4	1 3/4	1 7/8	13 1/8	11 5/8	2 3/8	15 1/4	3/16	*	(4) 3/4
	111.1	171.5	231.8	222.3	114.30	44.5	44.5	47.6	333.4	295.3	60.3	387.4	4.76	*	(4) 20

NOTE: Dimension "S" indicates the shaft length from centre of bearing to end of shaft for housings with one end closed.
For tabulation of dimension "S" See bearing tables on pages 52 and 53.

For an example on how to order, please see page 149.

Series SAF
Pillow block of cast iron for bearings with adapter sleeves, grease or oil lubrication
d_a 3 3/16 - 3 1/2 in

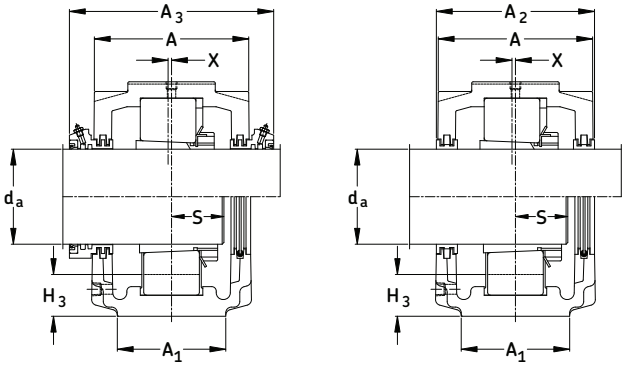

Shaft Dia. d_a	Complete Pillow Block Assembly**	Housing	Triple Ring Seal***	Taconite Seal	Bearing	Adapter Sleeve	Fixing Rings	Qty.	Mass Complete		End Cover
in									lb.	kg.	
3 3/16 [1]	(F)SAF1518/ 3 3/16	(F)SAF 518	LOR 188	TER 188	1218 K	HA 218	SR 1518	2	44.0	20.0	EPR 11
	SAF 1618/ 3 3/16	SAF 618	LOR 188	TER 188	1318 K	HA 318	SR 1618	2	92.0	41.7	EPR 11
	(F)SAF 22518 3 3/16	(F)SAF 518	LOR 188	TER 188	22218 EK	HA 318	SR 18-15	1	44.0	20.0	EPR 11
	(F)SAF C2518/ 3 3/16	(F)SAF 518	LOR 188	TER 188	C2218 EK*	HA 318E	SR 18-15	1	44.0	20.0	EPR 11
	SAF 22618/ 3 3/16	SAF 618	LOR 188	TER 188	22318 EK	HA 2318	SR 21-18	1	97.0	44.0	EPR 11
	SAF C2618/ 3 3/16	SAF 618	LOR 188	TER 188	C2318 EK *	HA 2318	SR 21-18	1	97.0	44.0	EPR 11
3 1/4	(F)SAF 1518/ 3 1/4	(F)SAF 518	LOR 189	TER 189	1218 K	HE 218	SR 1518	2	44.0	20.0	EPR 11
	SAF 1618/ 3 1/4	SAF 618	LOR 189	TER 189	1318 K	HE 318	SR 1618	2	92.0	41.7	EPR 11
	(F)SAF 22518/ 3 1/4	(F)SAF 518	LOR 189	TER 189	22218 EK	HE 318	SR 18-15	1	44.0	20.0	EPR 11
	(F)SAF C2518/ 3 1/4	(F)SAF 518	LOR 189	TER 189	C2218 EK*	HE 318E	SR 18-15	1	44.0	20.0	EPR 11
	SAF 22618/ 3 1/4	SAF 618	LOR 189	TER 189	22318 EK	HE 2318	SR 21-18	1	97.0	44.0	EPR 11
	SAF C2618/ 3 1/4	SAF 618	LOR 189	TER 189	C2318 EK*	HE 2318	SR 21-18	1	97.0	44.0	EPR 11
3 7/16 [1]	(F)SAF 1520/ 3 7/16	(F)SAF 520	LOR 102	TER 102	1220 K	HA 220	SR 1520	2	62.0	28.1	EPR 12
	SAF 1620/ 3 7/16	SAF 620	LOR 102	TER 102	1320 K	HA 320	SR 1620	2	101.0	45.8	EPR 12
	(F)SAF 22520/ 3 7/16	(F)SAF 520	LOR 102	TER 102	22220 EK	HA 320	SR 20-17	1	74.0	33.6	EPR 12
	(F)SAF C2520/ 3 7/16	(F)SAF 520	LOR 102	TER 102	C2220 EK*	HA 320E	SR 20-17	1	74.0	33.6	EPR 12
	SAF 22620/ 3 7/16	SAF 620	LOR 102	TER 102	22320 EK	HA 2320	SR 24-20	1	125.0	56.7	EPR 12
	SAF C2620/ 3 7/16	SAF 620	LOR 102	TER 102	C2320 EK*	HA 2320	SR 24-20	1	125.0	56.7	EPR 12
3 1/2	(F)SAF 1520/ 3 1/2	(F)SAF 520	LOR 103	TER 103	1220 K	HE 220	SR 1520	2	62.0	28.1	EPR 12
	SAF 1620/ 3 1/2	SAF 620	LOR 103	TER 103	1320 K	HE 320	SR 1620	2	101.0	45.8	EPR 12
	(F)SAF 22520/ 3 1/2	(F)SAF 520	LOR 103	TER 103	22220 EK	HE 320	SR 20-17	1	74.0	33.6	EPR 12
	(F)SAF C2520/ 3 1/2	(F)SAF 520	LOR 103	TER 103	C2220 EK*	HE 320E	SR 20-17	1	74.0	33.6	EPR 12
	SAF 22620/ 3 1/2	SAF 620	LOR 103	TER 103	22320 EK	HE 2320	SR 24-20	1	125.0	56.7	EPR 12
	SAF C2620/ 3 1/2	SAF 620	LOR 103	TER 103	C2320 EK*	HE 2320	SR 24-20	1	125.0	56.7	EPR 12

[1] The highlighted sizes contain seals, which are included in that housing, optional shaft sizes require additional seals.

* Must always be located.

** (F)SAF = either a 2 or 4 bolt base. Sizes 618, 522 and above are standard with 4 bolt bases. Prefix "F" not required.

*** If seals for metric shafting are required, please check SKF for availability.

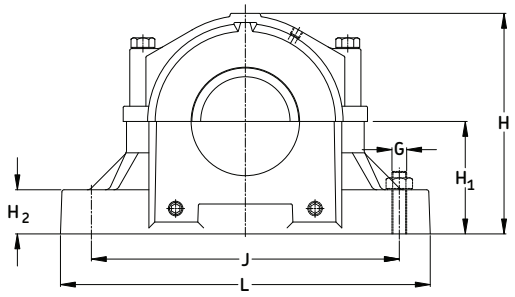

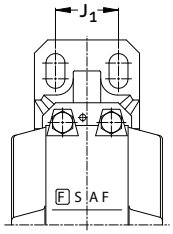

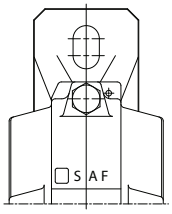

Housing No.	Dimensions						Static Oil Level H_3								Bolts (req'd)
	A_1	A_2	A_3	H	H_1	H_2	Roller Bearing	Ball Bearing	J_{max}	J_{min}	J_1	L	X	S	G
	in/mm														
SAF 518	3 7/8	5 7/8	8 1/8	7 23/32	4	1 5/8	1 1/2	1 1/2	11 3/4	10 1/4	-	13 3/4	3/16	*	(2) 3/4
	98.4	149.2	206.4	196.1	101.60	41.3	38.1	38.1	298.5	260.4	-	349.3	4.76	*	(2) 20
FSAF 518	3 7/8	5 7/8	8 1/8	7 23/32	4	1 5/8	1 1/2	1 1/2	11 3/4	10 1/4	2 1/8	13 3/4	3/16	*	(4) 5/8
	98.4	149.2	206.4	196.1	101.60	41.3	38.1	38.1	298.5	260.4	54.0	349.3	4.76	*	(4) 16
SAF 618	4 3/8	6 7/8	9 1/8	9 1/4	4 3/4	2	1 7/8	2	13 1/2	12	2 1/4	15 1/2	3/16	*	(4) 3/4
	111.1	174.6	231.8	235.0	120.65	50.8	47.6	50.8	342.9	304.8	57.2	393.7	4.76	*	(4) 20
SAF 520	4 3/8	6 1/8	8 3/4	8 9/16	4 1/2	1 3/4	1 21/32	1 21/32	13 1/8	11 5/8	-	15 1/4	3/16	*	(2) 7/8
	111.1	155.6	222.3	217.5	114.30	44.5	42.1	42.1	333.4	295.3	-	387.4	4.76	*	(2) 22
FSAF 520	4 3/8	6 1/8	8 3/4	8 9/16	4 1/2	1 3/4	1 21/32	1 21/32	13 1/8	11 5/8	2 3/8	15 1/4	3/16	*	(4) 3/4
	111.1	155.6	222.3	217.5	114.30	44.5	42.1	42.1	333.4	295.3	60.3	387.4	4.76	*	(4) 20
SAF 620	4 3/4	7 3/8	10	10 3/16	5 1/4	2 1/8	2 1/32	2 3/16	14 1/2	13 1/4	2 3/4	16 1/2	3/16	*	(4) 3/4
	120.7	187.3	254.0	258.8	133.35	54.0	51.6	55.6	368.3	336.6	69.9	419.1	4.76	*	(4) 20

NOTE: Dimension "S" indicates the shaft length from centre of bearing to end of shaft for housings with one end closed.
For tabulation of dimension "S" See bearing tables on pages 52 and 53.

For an example on how to order, please see page 149.

Series SAF
Pillow block of cast iron for bearings with adapter sleeves, grease or oil lubrication
d_a 4 15/16 - 4 1/2 in

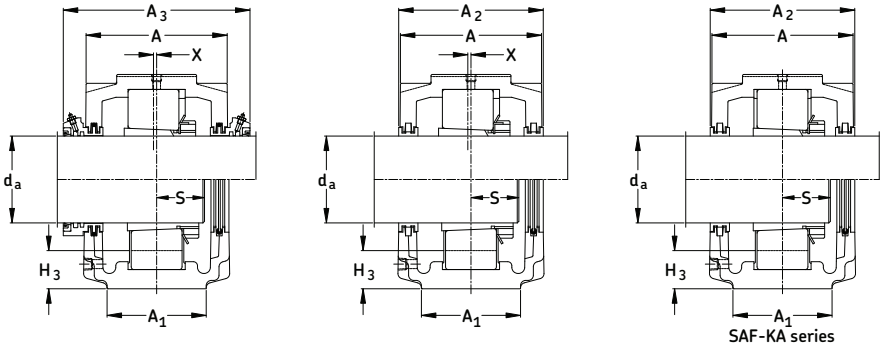

SAF-KA series

Shaft Dia. d_a	Complete Pillow Block Assembly**	Housing	Triple Ring Seal***	Taconite Seal	Bearing	Adapter Sleeve	Fixing Rings	Qty.	Mass Complete		End Cover
in									lb.	kg.	
3 15/16 [1]	SAF 1522/ 3 15/16	SAF 522	LOR 109	TER 109	1222 K	H 222	SR 1522	2	69.0	31.3	EPR 13
	SAF 1622/ 3 15/16	SAF 622	LOR 109	TER 109	1322 K	H 322	SR 1622	2	138.0	62.6	EPR 13
	SAF 22522/ 3 15/16	SAF 522	LOR 109	TER 109	22222 EK	H 322	SR 22-19	1	73.0	33.1	EPR 13
	SAF C2522/ 3 15/16	SAF 522	LOR 109	TER 109	C2222 EK*	H 322E	SR 22-19	1	73.0	33.1	EPR 13
	SAF 22622/ 3 15/16	SAF 622	LOR 109	TER 109	22322 EK	H 2322	SR 0-22	1	165.0	74.8	EPR 13
4	SAF 1522/4	SAF 522	LOR 110	TER 110	1222 K	HE 222	SR 1522	2	69.0	31.3	EPR 13
	SAF 1622/4	SAF 622	LOR 110	TER 110	1322 K	HE 322	SR 1622	2	138.0	62.6	EPR 13
	SAF 22522/4	SAF 522	LOR 110	TER 110	22222 EK	HE 322	SR 22-19	1	73.0	33.1	EPR 13
	SAF C2522/4	SAF 522	LOR 110	TER 110	C2222 EK*	HE 322E	SR 22-19	1	73.0	33.1	EPR 13
	SAF 22622/4	SAF 622	LOR 110	TER 110	22322 EK	HE 2322	SR 0-22	1	165.0	74.8	EPR 13
4 3/16 [1]	SAF 22524/4 3/16	SAF 524	LOR 113	TER 113	22224 EK	HA 3124	SR 24-20	1	120.0	54.4	EPR 14
	SAF 22624/4 3/16	SAF 624	LOR 113	TER 113	22324CCK/W33	HA 2324	SR 0-24	1	225.0	102.0	EPR 14
	(F)SAF 23024KA/4 3/16	(F)SAF 024KA	LOR 113	TER 113	23024CCK/W33	SNW3024x4 3/16	38151-24	2	73.0	33.1	EPR 14
4 1/4	SAF 22524/4 1/4	SAF 524	LOR 114	TER 114	22224 EK	HE 3124	SR 24-20	1	120.0	54.4	EPR 14
	SAF 22624/4 1/4	SAF 624	LOR 114	TER 114	22324CCK/W33	HE 2324	SR 0-24	1	225.0	102.0	EPR 14
	(F)SAF 23024KA 4 1/4	(F)SAF 024KA	LOR 114	TER 114	23024CCK/W33	SNW3024x4 1/4	38151-24	2	73.0	33.1	EPR 14
4 7/16 [1]	SAF 22526/4 7/16	SAF 526	LOR 117	TER 117	22226 EK	HA 3126	SR 26-0	1	160.0	72.6	EPR 15
	SAF C2526/4 7/16	SAF 526	LOR 117	TER 117	C2226 EK*	HA 3126 L	SR 26-0	1	160.0	72.6	EPR 15
	SAF 22626/4 7/16	SAF 626	LOR 117	TER 117	22326CCK/W33	HA 2326	SR 0-26	1	233.0	105.7	EPR 15
	SAF 23026KA/4 7/16	SAF 026KA	LOR 117	TER 117	23026CCK/W33	SNW3026x4 7/16	38151-26	2	95.0	43.1	EPR 15
4 1/2	SAF 22526/4 1/2	SAF 526	LOR 118	TER 118	22226 EK	HE 3126	SR 26-0	1	160.0	72.6	EPR 15
	SAF C2526/4 1/2	SAF 526	LOR 118	TER 118	C2226 EK*	HE 3126 L	SR 26-0	1	160.0	72.6	EPR 15
	SAF 22626/4 1/2	SAF 626	LOR 118	TER 118	22326CCK/W33	HE 2326	SR 0-26	1	233.0	105.7	EPR 15
	SAF 23026KA/4 1/2	SAF 026KA	LOR 118	TER 118	23026CCK/W33	SNW3026x4 1/2	38151-26	2	95.0	43.1	EPR 15

[1] The highlighted sizes contain seals, which are included in that housing, optional shaft sizes require additional seals.

* Must always be located.

** (F)SAF = either a 2 or 4 bolt base. Sizes 618, 522 and above are standard with 4 bolt bases. Prefix "F" not required.

*** If seals for metric shafting are required, please check SKF for availability.

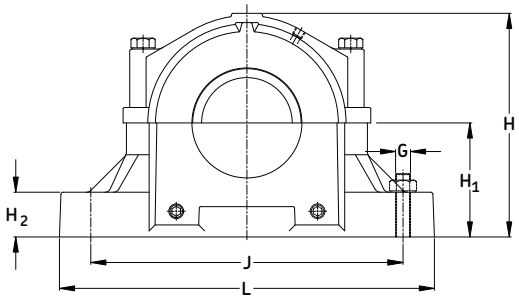

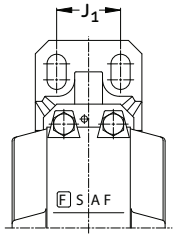

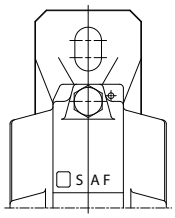

Housing No.	Dimensions						Static Oil Level							Bolts (req'd)
	A_1	A_2	A_3	H	H_1	H_2	H_3	J_{max}	J_{min}	J_1	L	X	S	G
	in/mm													
SAF 522	4 3/4	6 1/2	9 1/8	9 27/64	4 15/16	2	1 25/32	1 25/32	14 1/2	12 5/8	2 3/4	16 1/2	3/16	(4) 3/4
	120.7	165.1	231.8	239.3	125.41	50.8	45.2	45.2	368.3	320.7	69.9	419.1	4.76	(4) 20
SAF 622	5 1/4	8 1/8	10 3/4	11 5/16	6	2 3/8	2 13/32	2 1/2	16	14 5/8	3 1/4	18 3/8	3/16	(4) 7/8
	133.4	206.4	273.1	287.3	152.40	60.3	61.1	63.5	406.4	371.5	82.6	466.7	4.76	(4) 22
SAF 524	4 3/4	7 3/8	10	10 1/8	5 1/4	2 1/8	1 27/32	14 1/2	13 1/4	2 3/4	16 1/2	3/16	*	(4) 3/4
	120.7	187.3	254.0	257.2	133.35	54.0	46.8	368.3	336.6	69.9	419.1	4.76	*	(4) 20
SAF 624	6 1/4	8 3/8	11	12 1/2	6 5/16	2 1/2	2 3/8	18 1/4	17	3 3/4	21 1/4	3/16	*	(4) 1
	158.8	212.7	279.4	317.5	160.34	63.5	60.3	463.6	431.8	95.3	539.8	4.76	*	(4) 24
SAF 024KA	4 3/8	6	9	8 3/4	4 1/2	1 3/4	1 9/16	13 1/8	11 5/8	-	15 1/4	-	*	(2) 7/8
	111.1	152.4	228.6	222.3	114.30	44.5	39.7	333.4	295.3	-	387.4	-	*	(2) 22
FSAF 024KA	4 3/8	6	9	8 3/4	4 1/2	1 3/4	1 9/16	13 1/8	11 5/8	2 3/8	15 1/4	-	*	(4) 3/4
	111.1	152.4	228.6	222.3	114.30	44.5	39.7	333.4	295.3	60.3	387.4	-	*	(4) 20
SAF 526	5 1/4	7 5/8	10 5/8	11 5/8	6	2 3/8	2 3/8	16	14 5/8	3 1/4	18 3/8	3/16	*	(4) 7/8
	133.4	193.7	269.9	295.3	152.40	60.3	60.3	406.4	371.5	82.6	466.7	4.76	*	(4) 22
SAF 626	6 1/4	8 3/4	11 3/8	13 5/16	6 11/16	2 5/8	2 7/16	19 1/4	17 3/8	3 3/4	22	3/16	*	(4) 1
	158.8	222.3	288.9	338.1	169.86	66.7	61.9	489.0	441.3	95.3	558.8	4.76	*	(4) 24
SAF 026KA	4 3/4	6 1/2	9 1/4	9 5/8	4 15/16	2	1 11/16	14 1/2	12 5/8	2 3/4	16 1/2	-	*	(4) 3/4
	120.7	165.1	235.0	244.5	125.41	50.8	42.9	368.3	320.7	69.9	419.1	-	*	(4) 20

NOTE: Dimension "S" indicates the shaft length from centre of bearing to end of shaft for housings with one end closed. For tabulation of dimension "S" See bearing tables on pages 52 and 53.

For an example on how to order, please see page 149.

Series SAF
Pillow block of cast iron for bearings with adapter sleeves, grease or oil lubrication
d_a 4 15/16 - 5 1/2 in

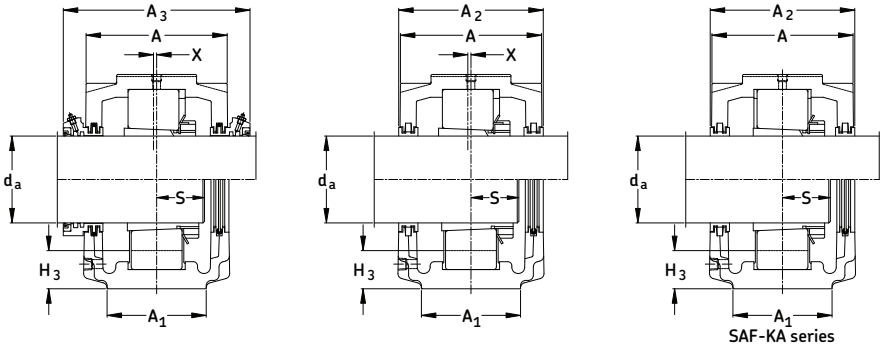

Shaft Dia. d_a	Complete Pillow Block Assembly	Housing	Triple Ring Seal***	Taconite Seal	Bearing	Adapter Sleeve	Fixing Rings	Qty.	Mass Complete		End Cover
in									lb.	kg.	
4 15/16 [1]	SAF 22528/4 15/16	SAF 528	LOR 122	TER 122	22228CCK/W33	HA 3128	SR 28-0	1	175	79.4	EPR 27
	SAF C2528/4 15/16	SAF 528	LOR 122	TER 122	C2228K*	HA 3128 L	SR 28-0	1	175	79.4	EPR 27
	SAF 22628/4 15/16	SAF 628	LOR 122	TER 122	22328CCK/W33	HA 2328	SR 0-28	1	330	149.7	EPR 27
	SAF 23028KA/4 15/16	SAF 028KA	LOR 122	TER 122	23028CCK/W33	SNW3028x4 15/16	36053-50	2	115	52.2	EPR 27
5	SAF 22528/5	SAF 528	LOR 123	TER 123	22228CCK/W33	HE 3128	SR 28-0	1	175	79.4	EPR 27
	SAF C2528/5	SAF 528	LOR 123	TER 123	C2228K*	HE 3128 L	SR 28-0	1	175	79.4	EPR 27
	SAF 22628/5	SAF 628	LOR 123	TER 123	22328CCK/W33	HE 2328	SR 0-28	1	330	149.7	EPR 27
	SAF 23028KA/5	SAF 028KA	LOR 123	TER 123	23028CCK/W33	SNW3028x5	36053-50	2	115	52.2	EPR 27
5 3/16 [1]	SAF 22530/5 3/16	SAF 530	LOR 125	TER 125	22230CCK/W33	HA 3130	SR 30-0	1	220	99.8	EPR 16
	SAF C2530/5 3/16	SAF 530	LOR 125	TER 125	C2230K*	HA 3130 L	SR 30-0	1	220	99.8	EPR 16
	SAF 22630/5 3/16	SAF 630	LOR 125	TER 125	22330CCK/W33	HA 2330	SR 36-30	1	375	170.1	EPR 16
	SAF 23030KA/5 3/16	SAF 030KA	LOR 125	TER 125	23030CCK/W33	SNW3030x5 3/16	SR 0-21	2	155	70.3	EPR 16
5 1/4	SAF 22530/5 1/4	SAF 530	LOR 126	TER 126	22230CCK/W33	HE 3130	SR 30-0	1	220	99.8	EPR 16
	SAF C2530/5 1/4	SAF 530	LOR 126	TER 126	C2230K*	HE 3130 L	SR 30-0	1	220	99.8	EPR 16
	SAF 22630/5 1/4	SAF 630	LOR 126	TER 126	22330CCK/W33	HE 2330	SR 36-30	1	375	170.1	EPR 16
	SAF 23030KA/5 1/4	SAF 030KA	LOR 126	TER 126	23030CCK/W33	SNW3030x5 1/4	SR 0-21	2	155	70.3	EPR 16
5 7/16 [1]	SAF 22532/5 7/16	SAF 532	LOR 130	TER 130	22232CCK/W33	HA 3132	SR 32-0	1	245	111.1	EPR 16
	SAF 22632/5 7/16	SAF 632	LOR 130	TER 130	22332CCK/W33	HA 2332	SR 38-32	1	430	195.0	EPR 16
	SAF 23032KA/5 7/16	SAF 032KA	LOR 130	TER 130	23032CCK/W33	SNW3032x5 7/16	38151-32	2	140	63.5	EPR 16
5 1/2	SAF 22532/5 1/2	SAF 532	LOR 131	TER 131	22232CCK/W33	HE 3132	SR 32-0	1	245	111.1	EPR 16
	SAF 22632/5 1/2	SAF 632	LOR 131	TER 131	22332CCK/W33	HE 2332	SR 38-32	1	430	195.0	EPR 16
	SAF 23032KA/5 1/2	SAF 032KA	LOR 131	TER 131	23032CCK/W33	SNW3032x5 1/2	38151-32	2	140	63.5	EPR 16

[1] The highlighted sizes contain seals, which are included in that housing, optional shaft sizes require additional seals.

* Must always be located.

*** If seals for metric shafting are required, please check SKF for availability.

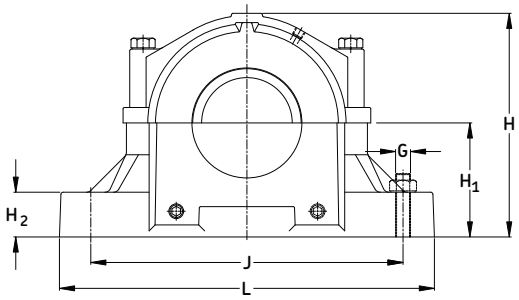

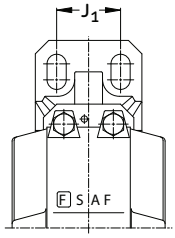

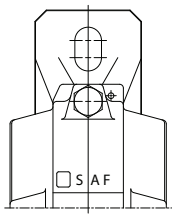

Housing No.	Dimensions						Static Oil Level							Bolts (req'd)
	A_1	A_2	A_3	H	H_1	H_2	H_3	J_{max}	J_{min}	J_1	L	X	S	G
	in/mm													
SAF 528	5 7/8	7 5/8	10 1/4	12 1/32	6	2 3/8	2 1/32	17 3/8	15 5/8	3 3/8	20 1/8	3/16	*	(4) 1
	149.2	193.7	260.4	305.6	152.40	60.3	51.6	441.3	396.9	85.7	511.2	4.76	*	(4) 24
SAF 628	6 3/4	9 5/8	12 1/8	14 3/16	7 1/16	2 3/4	2 9/16	21 5/8	19 3/8	4 1/4	24 3/4	3/16	*	(4) 1
	171.5	244.5	308.0	360.4	179.39	69.9	65.1	549.3	492.1	108.0	628.7	4.76	*	(4) 24
SAF 028KA	4 3/4	7 3/8	10 1/16	10 1/4	5 1/4	2 1/8	1 13/16	14 1/2	13 1/4	2 3/4	16 1/2	-	*	(4) 3/4
	120.7	187.3	255.6	260.4	133.35	54.0	46.0	368.3	336.6	69.9	419.1	-	*	(4) 20
SAF 530	6 1/4	8 3/8	11	12 1/2	6 5/16	2 1/2	2	18 1/4	17	3 3/4	21 1/4	3/16	*	(4) 1
	158.8	212.7	279.4	317.5	160.34	63.5	50.8	463.6	431.8	95.3	539.8	4.76	*	(4) 24
SAF 630	7 1/8	9 3/4	12 1/2	14 7/8	7 1/2	3	2 5/8	23 5/8	20 7/8	4 5/8	26 3/4	3/16	*	(4) 1
	181.0	247.7	317.5	377.8	190.50	76.2	66.7	600.1	530.2	117.5	679.5	4.76	*	(4) 24
SAF 030KA	5 1/4	8 1/8	10 13/16	11 5/16	6	2 3/8	2 7/32	16	14 5/8	3 1/4	18 3/8	-	*	(4) 7/8
	133.4	206.4	274.6	287.3	152.40	60.3	56.4	406.4	371.5	82.6	466.7	-	*	(4) 22
SAF 532	6 1/4	8 3/4	11 3/8	13 5/16	6 11/16	2 5/8	2 1/16	19 1/4	17 3/8	3 3/4	22	3/16	*	(4) 1
	158.8	222.3	288.9	338.1	169.86	66.7	52.4	489.0	441.3	95.3	558.8	4.76	*	(4) 24
SAF 632	7 1/2	10 3/4	13 3/8	15 11/16	7 7/8	3 1/8	2 11/16	24 3/8	21 5/8	4 1/2	28	3/16	*	(4) 1 1/4
	190.5	273.1	339.7	398.5	200.03	79.4	68.3	619.1	549.3	114.3	711.2	4.76	*	(4) 30
SAF 032KA	5 1/4	8 1/8	10 13/16	11 5/16	6	2 3/8	2 1/32	16	14 5/8	3 1/4	18 3/8	-	*	(4) 7/8
	133.4	206.4	274.6	287.3	152.40	60.3	51.6	406.4	371.5	82.6	466.7	-	*	(4) 22

NOTE: Dimension "S" indicates the shaft length from centre of bearing to end of shaft for housings with one end closed.
For tabulation of dimension "S" See bearing tables on pages 52 and 53.

For an example on how to order, please see page 149.

Series SAF
Pillow block of cast iron for bearings with adapter sleeves, grease or oil lubrication
d_a 5 15/16 - 7 3/16 in

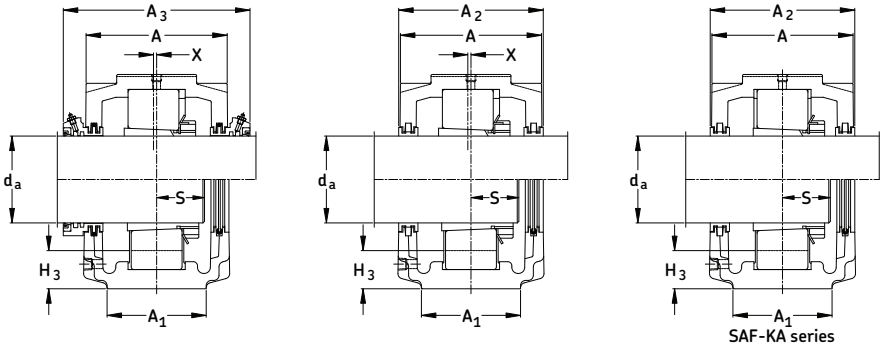

SAF-KA series

Shaft Dia. d_a	Complete Pillow Block Assembly	Housing	Triple Ring Seal***	Taconite Seal	Bearing	Adapter Sleeve	Fixing Rings	Qty.	Mass Complete		End Cover
in									lb.	kg.	
5 15/16 [1]	SAF 22534/5 15/16	SAF 534	LOR 140	TER 140	22234CCK/W33	HA 3134	SR 34-0	1	310	140.6	EPR 18
	SAF C2534/5 15/16	SAF 534	LOR 140	TER 140	C2234K*	HA 3134 L	SR 34-0	1	310	140.6	EPR 18
	SAF 22634/5 15/16	SAF 634	LOR 140	TER 140	22334CCK/W33	HA 2334	SR 40-34	1	515	233.6	EPR 18
	SAF 23034KA/5 15/16	SAF 034KA	LOR 140	TER 140	23034CCK/W33	SNW3034x5 15/16	SR 0-24	2	170	77.1	EPR 18
6	SAF 22534/6	SAF 534	LOR 141	TER 141	22234CCK/W33	HE 3134	SR 34-0	1	310	140.6	EPR 18
	SAF C2534/6	SAF 534	LOR 141	TER 141	C2234K*	HE 3134 L	SR 34-0	1	310	140.6	EPR 18
	SAF 22634/6	SAF 634	LOR 141	TER 141	22334CCK/W33	HE 2334	SR 40-34	1	515	233.6	EPR 18
	SAF 23034KA/6	SAF 034KA	LOR 141	TER 141	23034CCK/W33	SNW3034x6	SR 0-24	2	170	77.1	EPR 18
6 7/16 [1]	SAF 22536/6 7/16	SAF 536	LOR 148	TER 148	22236CCK/W33	HA 3136	SR 36-30	1	345	156.5	EPR 19
	SAF 23036KA/6 7/16	SAF 036KA	LOR 148	TER 148	23036CCK/W33	SNW3036x6 7/16	38151-36	2	225	102.0	EPR 19
6 1/2	SAF 22536/ 6 1/2	SAF 536	LOR 149	TER 149	22236CCK/W33	HE 3136	SR 36-30	1	345	156.5	EPR 19
	SAF 23036KA/ 6 1/2	SAF 036KA	LOR 149	TER 149	23036CCK/W33	SNW3036x6 1/2	38151-36	2	225	102.0	EPR 19
6 15/16 [1]	SAF 22538/ 6 15/16	SAF 538	LOR 155	TER 155	22238CCK/W33	HA 3138	SR 38-32	1	400	181.4	EPR 20
	SAF C2538/ 6 15/16	SAF 538	LOR 155	TER 155	C2238K*	HA 3138 L	SR 38-32	1	400	181.4	EPR 20
	SAF 22638/ 6 15/16	SAF 638	LOR 155	TER 155	22338CCK/W33	HA 2338	SR 44-38	1	700	317.5	EPR 20
	SAF 23038KA/ 15/16	SAF 038KA	LOR 155	TER 155	23038CCK/W33	SNW3038x6 15/16	38151-38	2	235	106.6	EPR 20
7 3/16 [1]	SAF 22540/ 7 3/16	SAF 540	LOR 159	TER 159	22240CCK/W33	HA 3140	SR 40-34	1	490	222.2	EPR 21
	SAF 23040KA/ 7 3/16	SAF 040KA	LOR 159	TER 159	23040CCK/W33	SNW3040x7 3/16	38151-40	2	300	136.1	EPR 21

[1] The highlighted sizes contain seals, which are included in that housing, optional shaft sizes require additional seals.

* Must always be located.

*** If seals for metric shafting are required, please check SKF for availability.

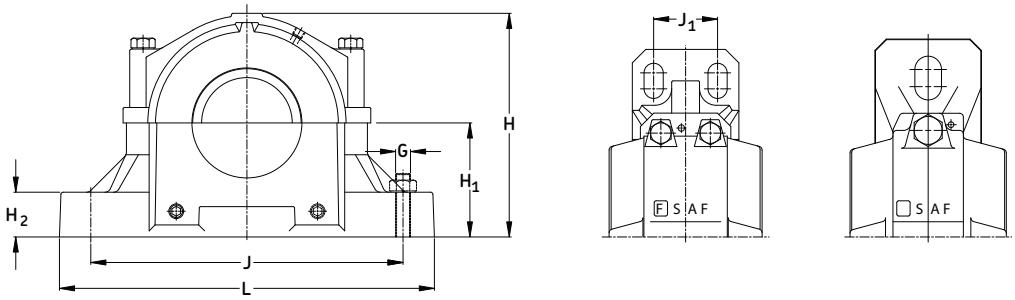

Housing No.	Dimensions						Static Oil Level							Bolts (req'd)
	A_1	A_2	A_3	H	H_1	H_2	H_3	J_{max}	J_{min}	J_1	L	X	S	G
	in/mm													
SAF 534	6 3/4	9 5/8	12 1/8	14 3/16	7 1/16	2 3/4	2 5/32	21 5/8	19 3/8	4 1/4	24 3/4	3/16	*	(4) 1
	171.5	244.5	308.0	360.4	179.39	69.9	54.8	549.3	492.1	108.0	628.7	4.76	*	(4) 24
SAF 634	8	11 1/4	13 7/8	16 1/2	8 1/4	3 3/8	2 3/4	25	22 1/2	5	29 1/2	3/16	*	(4) 1 1/4
	203.2	285.8	352.4	419.1	209.55	85.7	69.9	635.0	571.5	127.0	749.3	4.76	*	(4) 30
SAF 034KA	5 7/8	7 5/8	10 5/16	11 3/4	6	2 3/8	1 23/32	17 1/8	16	3 3/8	20 1/8	-	*	(4) 1
	149.2	193.7	261.9	298.5	152.40	60.3	43.7	435.0	406.4	85.7	511.2	-	*	(4) 24
SAF 536	7 1/8	10	12 1/2	14 7/8	7 1/2	3	2 3/8	23 5/8	20 7/8	4 5/8	26 3/4	3/16	*	(4) 1
	181.0	254.0	317.5	377.8	190.50	76.2	60.3	600.1	530.2	117.5	679.5	4.76	*	(4) 24
SAF 036KA	6 1/4	8 3/4	11 7/16	13 5/16	6 11/16	2 5/8	2 1/16	19 1/4	17 3/8	3 3/4	22	-	*	(4) 1
	158.8	222.3	290.5	338.1	169.86	66.7	52.4	489.0	441.3	95.3	558.8	-	*	(4) 24
SAF 538	7 1/2	10 3/4	13 3/8	15 11/16	7 7/8	3 1/8	2 7/16	24 3/8	21 5/8	4 1/2	28	3/16	*	(4) 1 1/4
	190.5	273.1	339.7	398.5	200.03	79.4	61.9	619.1	549.3	114.3	711.2	4.76	*	(4) 30
SAF 638	8 3/4	12	14 5/8	18 5/8	9 1/2	3 3/4	3 3/8	27 7/8	24 3/4	5 1/4	32 3/4	3/16	*	(4) 1 1/2
	222.3	304.8	371.5	473.1	241.30	95.3	85.7	708.0	628.7	133.4	831.9	4.76	*	(4) 36
SAF 038KA	6 1/4	8 3/4	14 5/8	13 5/16	6 11/16	2 5/8	1 7/8	19 1/4	17 3/8	3 3/4	22	-	*	(4) 1
	158.8	222.3	371.5	338.1	169.86	66.7	47.6	489.0	441.3	95.3	558.8	-	*	(4) 24
SAF 540	8	11 1/4	14 1/8	16 1/2	8 1/4	3 3/8	2 15/32	25	22 1/2	5	29 1/2	3/16	*	(4) 1 1/4
	203.2	285.8	358.8	419.1	209.55	85.7	62.7	635.0	571.5	127.0	749.3	4.76	*	(4) 30
SAF 040KA	6 3/4	9 5/8	12 9/16	14 3/16	7 1/16	2 3/4	1 15/16	21 5/8	19 3/8	4 1/4	24 3/4	-	*	(4) 1
	171.5	244.5	319.1	360.4	179.39	69.9	49.2	549.3	492.1	108.0	628.7	-	*	(4) 24

NOTE: Dimension "S" indicates the shaft length from centre of bearing to end of shaft for housings with one end closed. For tabulation of dimension "S" See bearing tables on pages 52 and 53.

For an example on how to order, please see page 149.

Series SAF
Pillow block of cast iron for bearings with adapter sleeves, grease or oil lubrication
d_a 7 7/8 - 10 1/2 in

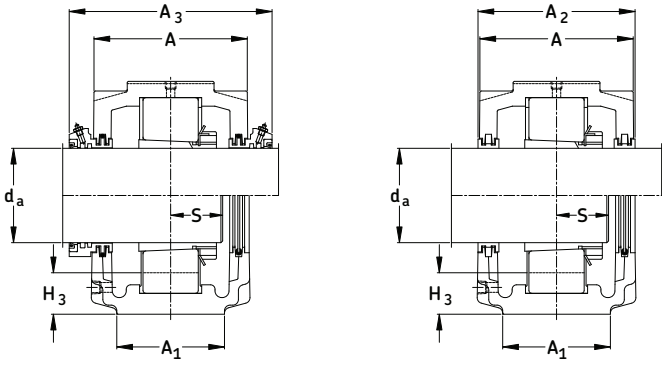

Shaft Dia.	Complete Pillow Block Assembly	Housing	Triple Ring Shaft***	Taconite Seal for	Bearing	Adapter Sleeve	Fixing Rings	Qty.	Mass Complete		End Cover
in									lb.	kg.	
7 7/8	SAF 22544/ 7 7/8	SAF 544	LOR 166	TER 166	22244CCK/W33	H 3144	SR 44-38	1	672	305	EPR 23
	SAF 23044KA/ 7 7/8	SAF 044KA	LOR 166	TER 166	23044CCK/W33	SNW3044x7 7/8	36053-140	2	385	175	EPR 23
7 15/16 [1]	SAF 22544/ 7 15/16	SAF 544	LOR 167	TER 167	22244CCK/W33	SNW44x7 15/16	SR 44-38	1	673	305	EPR 23
	SAF C2544/7 15/16	SAF 544	LOR 167	TER 167	C2244K*	HA 3144 L	SR 44-38	1	673	305	EPR 23
	SAF 23044KA/7 15/16	SAF 044KA	LOR 167	TER 167	23044CCK/W33	SNW3044x7 15/16	36053-140	2	385	175	EPR 23
8 7/16	SAF 23048KA/8 7/16	SAF 048KA	LOR 550	TER 550	23048CCK/W33	SNP3048x8 7/16	A-8897	2	480	218	X-5217-4
8 1/2	SAF 23048KA/8 1/2	SAF 048KA	LOR 551	TER 551	23048CCK/W33	SNP3048x8 1/2	A-8897	2	480	218	X-5217-4
8 15/16 [1]	SAF 23048KA/8 15/16	SAF 048KA	LOR 552	TER 552	23048CCK/W33	SNP3048x8 15/16	A-8897	2	470	213	X-5217-4
9	SAF 23048KA/9	SAF 048KA	LOR 513	TER 513	23048CCK/W33	SNP3048x9	A-8897	2	470	213	X-5217-4
9 7/16 [1]	SAF 23052KA/9 7/16	SAF 052KA	LOR 553	TER 553	23052CCK/W33	SNP3052x9 7/16	A-8898	2	650	295	X-5217-2
9 1/2	SAF 23052KA/9 1/2	SAF 052KA	LOR 178	TER 178	23052CCK/W33	SNP3052x9 1/2	A-8898	2	650	295	X-5217-2
9 15/16	SAF 23056KA/9 15/16	SAF 056KA	LOR 607	TER 607	23056CCK/W33	SNP3056x9 15/16	A-8819	2	650	295	X-5217-2
10	SAF 23056KA/10	SAF 056KA	LOR 568	TER 568	23056CCK/W33	SNP3056x10	A-8819	2	650	295	X-5217-2
10 7/16 [1]	SAF 23056KA/10 7/16	SAF 056KA	LOR 606	TER 606	23056CCK/W33	SNP3056x10 7/16	A-8819	2	640	290	X-5217-1
10 1/2	SAF 23056KA/10 1/2	SAF 056KA	LOR 519	TER 519	23056CCK/W33	SNP3056x10 1/2	A-8819	2	640	290	X-5217-1

[1] The highlighted sizes contain seals, which are included in that housing, optional shaft sizes require additional seals.

* Must always be located.

*** If seals for metric shafting are required, please check SKF for availability.

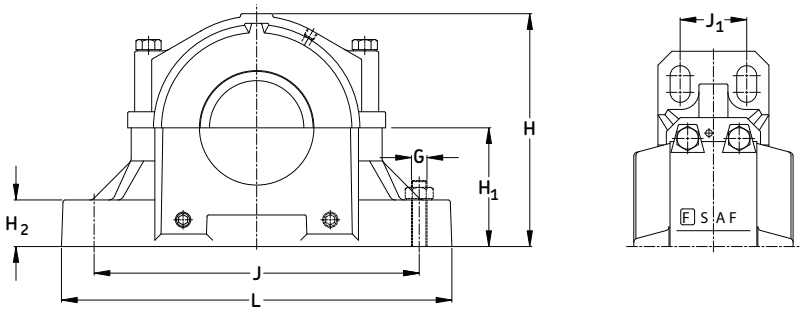

Housing No.	Dimensions						Static Oil Level							Bolt (req'd)
	A_1	A_2	A_3	H	H_1	H_2	H_3	J_{max}	J_{min}	J_1	L	X	S	G
	in/mm													
SAF 544	8 3/4	12	14 1/2	18 5/8	9 1/2	3 3/4	3 1/8	27 7/8	24 3/4	5 1/4	32 3/4	3/16	*	(4) 1 1/2
	222.3	304.8	368.3	473.1	241.30	95.3	79.4	708.0	628.7	133.4	831.9	4.76	*	(4) 36
SAF 044KA	7 1/2	10 3/4	13 7/16	15 11/16	7 7/8	3 1/8	2 1/4	24 3/8	21 5/8	4 1/2	28	-	*	(4) 1 1/4
	190.5	273.1	341.3	398.5	200.03	79.4	57.2	619.1	549.3	114.3	711.2	-	*	(4) 30
SAF 048KA	8	11 1/4	15 3/8	16 1/2	8 1/4	3 3/8	2 7/32	25	22 1/2	5	29 1/2	-	*	(4) 1 1/4
	203.2	285.8	390.5	419.1	209.55	85.7	56.4	635.0	571.5	127.0	749.3	-	*	(4) 30
SAF 052KA	8 3/4	12	16 1/8	18 5/8	9 1/2	3 3/4	2 3/4	27 7/8	24 3/4	5 1/4	32 3/4	-	*	(4) 1 1/2
	222.3	304.8	409.6	473.1	241.30	95.3	69.9	708.0	628.7	133.4	831.9	-	*	(4) 36
SAF 056KA	9	12 1/4	16 1/2	19 1/2	9 7/8	4	2 7/8	29 1/2	26 1/4	5 1/2	34 1/4	-	*	(4) 1 1/2
	228.6	311.2	419.1	495.3	250.83	101.6	73.0	749.3	666.8	139.7	870.0	-	*	(4) 36

NOTE: Dimension "S" indicates the shaft length from centre of bearing to end of shaft for housings with one end closed.
For tabulation of dimension "S" See bearing tables on pages 52 and 53.

For an example on how to order, please see page 149.

Pillow Block Housings

SAF, FSAF, SAFS, FSAFS

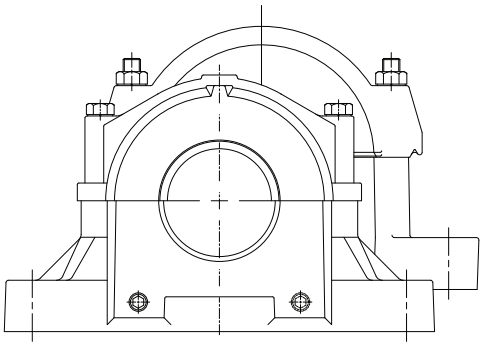

MATERIAL	SAF cast iron ASTM A48 grade 35 SAFS cast steel ASTM A27 grade 65-35
BEARING SERIES USED	13, 13E, 222CC, 223CC
SHAFT SIZE RANGE	1-7/16" to 9-9/16"
PILLOW BLOCK SIZE	213 - 244 (cylindrical bore mounting) 308 - 340 (cylindrical bore mounting)
PILLOW BLOCK LUBRICATION	Grease or Oil
STANDARD SEALS	LER 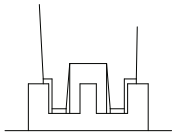 LOR & LORP 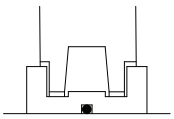
OPTIONAL SEALS	LOR + Contact element B-10724-xxx or B-10785-xxx 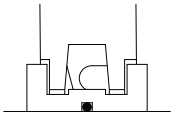 TER 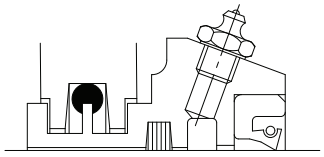 TER-V 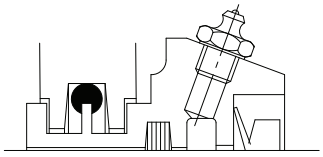 TER-C 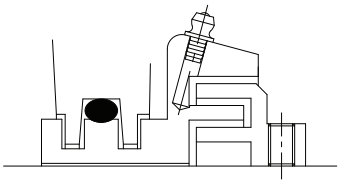 TER-CV 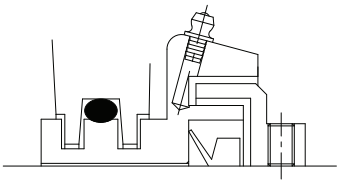

Note : Consult SKF for availability of Metric LOR seals.

Cylinderical Bore Mounting Split Pillow Blocks Nomenclature

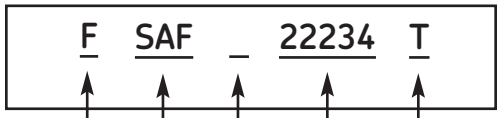

Base

~~0~~	Two bolt
F**	Four bolt (for cast iron)

Basic Design

Material

~~0~~	Cast iron (standard)
S	Cast steel

Size

Bearing bore: 34 = 170 mm

Suffixes

~~0~~	Standard triple ring seals (included)*
-11	4 bolt base for cast steel blocks i.e. SAFS 22220-11
210	Contact seal (Now generally replaced by the LOR design)
C	Taconite service seal TER..C of Canadian design (1/pkg))
CV	Taconite service seal of Canadian design c/w V ring (1/pkg)
H	Held bearing, fixing rings for the 222 series bearings are included as standard.
HH	Option for a held bearing with 2 fixing rings where normally one is used (centres bearing)
T	Taconite service seal TER of American design
TLC	Standard LOR seal with additional B-10724-xxx contact element (max. temp.120ºC)
TLP	LORP with B-10785-xxx contact element for higher temperatures and speeds. (max. temp. 200ºC)
TV	Taconite service TER..V seal of American design c/w V ring
Y	One end closed with end cover or end plug.

Note:

* SAF housings include the seals, fixing rings and a grease nipple for the 222 series bearings with standard shaft sizes (highlighted in tables). If non-standard shaft sizes or bearings other than the 222 series are required. Seals and/or fixing rings must be ordered separately.

** Sizes 222, 318 and above have four bolt bases as standard. Prefix "F" not required.

How to order SAF: (Example)

When you order one SAF 22234 you will receive a package containing the following:

1 - Pillow block housing SAF 234, Cap drilled, tapped and plugged with 2 holes 1/4" NPT with grease fitting included
Base drilled, tapped and plugged with two diagonally opossed 1/2" NPT holes.
2 - Triple ring seals for shaft diameters: d_a LOR 161 (7 7/16") and d_b LOR 148 (6 7/16")
1 - Bearing SKF 22234 CC/W33
1 - Locknut AN 34 (If the shaft has been threaded to metric dimensions a KM 34 locknut may be required).
1 - Lockwasher W34 (If the KM 34 version is used a MB34 washer will be required).

If a "HELD or FIXED" unit is required, add the suffix "H" and 1 fixing ring (locating or stabilizing) SR 34-0 will be included.
Only one bearing per shaft should be held. CARB bearings displace internally and are therefore always "FREE".
However, they must always be located in the housing with fixing rings as does a true "FIXED" bearing.
If one end is closed add letter "Y" and an EPR 19 end cover will also be included .

Series SAF
Pillow block of cast iron for bearings with adapter sleeves, grease or oil lubrication
d_a 1 15/16 - 3 1/16 in
d_b 1 7/16 - 2 7/16 in

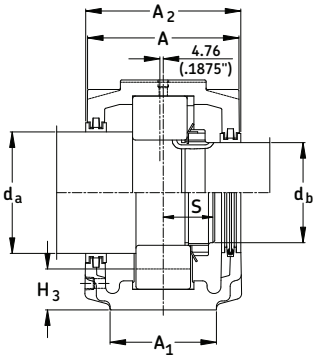

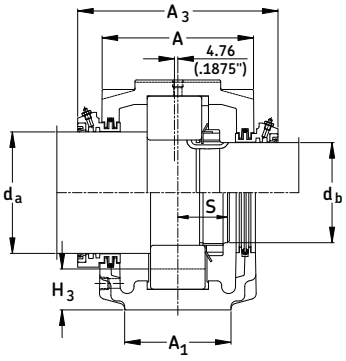

Shaft Dia. d_a	Shaft Dia. d_b	Complete Pillow Block Assembly**	Housing	Triple Seal Ring For Shaft Dia. d_a***	Triple Seal Ring For Shaft Dia. d_a***	Bearing	Lock Nut	Lock Washer	Fixing Rings	Qty.	Mass Complete		End Cover
in/mm	in/mm										lb.	kg.	
1 15/16	1 7/16	SAF 1308	SAF 308	LER 24	LER 17	1308 E	N 08	W 08	SR 1608	2	11.0	5.0	EPR 3
		SAF 22308	SAF 308	LER 24	LER 17	22308 E	N 08	W 08	SR 10-8	1	12.0	5.4	EPR 3
2 1/8	1 11/16	SAF 1309	SAF 309	LER 28	LER 20	1309 E	N 09	W 09	SR 1609	2	15.0	6.8	EPR 4
		SAF 22309	SAF 309	LER 28	LER 20	22309 E	N 09	W 09	SR 11-9	1	16.0	7.3	EPR 4
2 3/8	1 7/8	SAF 1310	SAF 310	LER 35	LER 23	1310 E	N 10	W 10	SR 1610	2	20.0	9.1	EPR 5
		SAF 22310	SAF 310	LER 35	LER 23	22310 E	N 10	W 10	SR 0-10	1	21.0	9.5	EPR 5
2 9/16	2 1/16	(F)SAF 1311	(F)SAF 311	LER 40	LER 27	1311 E	N 11	W 11	SR 1611	2	24.0	10.9	EPR 6
		(F)SAF 22311	(F)SAF 311	LER 40	LER 27	22311 E	N 11	W 11	SR 13-11	1	26.0	11.8	EPR 6
2 7/8	2 1/4	(F)SAF 1312	(F)SAF 312	LOR 47	LOR 33	1312 E	N 12	W 12	SR 1612	2	33.0	15.0	EPR 7
		(F)SAF 22312	(F)SAF 312	LOR 47	LOR 33	22312 E	N 12	W 12	SR 15-12	1	33.0	15.0	EPR 7
3 1/16	2 7/16	SAF 22213	SAF 213	LOR 55	LOR 37	22213 E	N 13	W 13	SR 13-0	1	22	9.8	EPR 7
		(F)SAF 1313	(F)SAF 313	LOR 55	LOR 37	1313 E	N 13	W 13	SR 1613	2	35.0	15.9	EPR 7
		(F)SAF 22313	(F)SAF 313	LOR 55	LOR 37	22313 E	N 13	W 13	SR 16-13	1	38.0	17.2	EPR 7

** (F)SAF = either a 2 or 4 bolt base. Sizes 318, 222 and above are standard with 4 bolt bases. Prefix "F" not required.

*** If seals for metric shafting are required, please check SKF for availability.

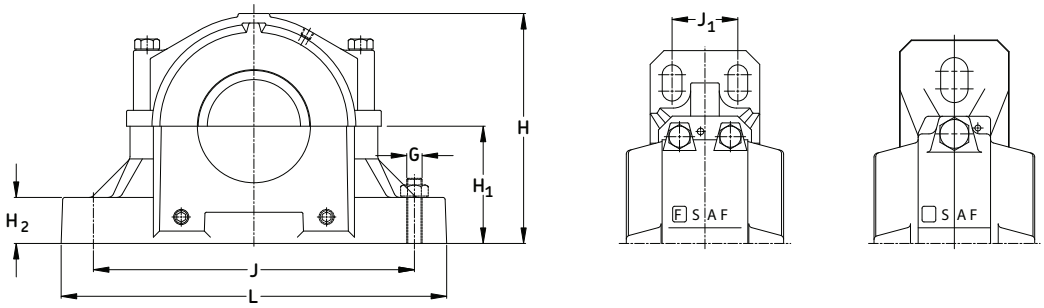

Housing No.	Dimensions						Static Oil Roller Bearing	Level H_3 Ball Bearing						Bolt (req'd)
	A_1	A_2	A_3	H	H_1	H_2			J_{max}	J_{min}	J_1	L	S	G
	in/mm													
SAF 308	2 3/8	4	6 25/32	4 13/16	2 1/2	1	1 3/16	1 7/32	7	6 1/2	-	8 1/4	*	(2) 1/2
	60.3	101.6	172.2	122.2	63.50	25.4	30.2	31.0	177.8	165.1	-	209.6	*	(2) 12
SAF 309	2 3/4	4 1/4	7 1/8	5 5/16	2 3/4	1	1 9/32	1 5/16	7 7/8	7 3/8	-	9 5/8	*	(2) 5/8
	69.8	108.0	181.0	134.9	69.80	25.4	32.5	33.3	200.0	187.3	-	244.5	*	(2) 16
SAF 310	2 3/4	4 5/8	7 1/2	5 13/16	3	1 1/8	1 3/8	1 7/16	9	7 3/4	-	10 5/8	*	(2) 5/8
	69.8	117.5	190.5	147.6	76.20	28.6	34.9	36.5	228.6	196.8	-	269.9	*	(2) 16
SAF 311	3 1/8	5	7 3/4	6 3/16	3 1/4	1 3/16	1 7/16	1 1/2	9 1/2	8 1/8	-	11	*	(2) 5/8
	79.4	127.0	196.9	157.2	82.60	30.2	36.5	38.1	241.3	206.4	-	279.4	*	(2) 16
FSAF 311	3 1/8	5	7 3/4	6 3/16	3 1/4	1 3/16	1 7/16	1 1/2	9 1/2	8 1/8	2	11	*	(4) 1/2
	79.4	127.0	196.9	157.2	82.60	30.2	36.5	38.1	241.3	206.4	50.8	279.4	*	(4) 12
SAF 312	3 1/8	5 1/4	8 1/8	6 3/8	3 1/4	1 3/16	1 5/16	1 3/8	9 5/8	8 5/8	-	11 1/4	*	(2) 5/8
	79.4	133.4	206.4	161.9	82.60	30.2	33.3	34.9	244.5	219.1	-	285.6	*	(2) 16
FSAF 312	3 1/8	5 1/4	8 1/8	6 3/8	3 1/4	1 3/16	1 5/16	1 3/8	9 5/8	8 5/8	1 7/8	11 1/4	*	(4) 1/2
	79.4	133.4	206.4	161.9	82.60	30.2	33.3	34.9	244.5	219.1	47.6	285.6	*	(4) 12
SAF 213	3 1/8	4 1/2	7 1/2	5 21/32	3	1	-	1 3/16	9 1/2	8 1/8	-	11	*	(2) 5/8
	79.4	114.3	190.5	143.67	76.2	25.4	-	30.2	241.3	206.38	-	279.4	*	(2) 5/8
SAF 313	3 1/2	5 5/16	8 1/4	6 19/32	3 1/2	1 1/4	1 13/32	1 7/16	11	9 5/8	-	13	*	(2) 3/4
	88.9	134.9	209.6	167.5	88.90	31.8	35.7	36.5	279.4	244.5	-	330.2	*	(2) 20
FSAF 313	3 1/2	5 5/16	8 1/4	6 19/32	3 1/2	1 1/4	1 13/32	1 7/16	11	9 5/8	2 1/8	13	*	(4) 5/8
	88.9	134.9	209.6	167.5	88.90	31.8	35.7	36.5	279.4	244.5	54	330.0	*	(4) 16

NOTE: Dimension "S" indicates the shaft length from centre of bearing to end of shaft for housings with one end closed.
For tabulation of dimension "S" See bearing tables on pages 52 and 53.

For an example on how to order, please see page 169.

Series SAF
Pillow block of cast iron for bearings with adapter sleeves, grease or oil lubrication
d_a 3 1/4 - 3 5/8 in
d_b 2 5/8 - 3 in

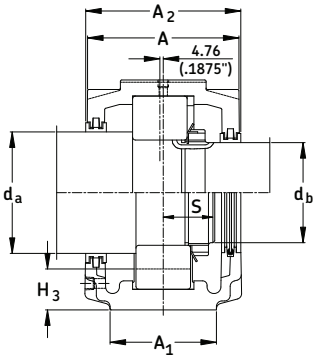

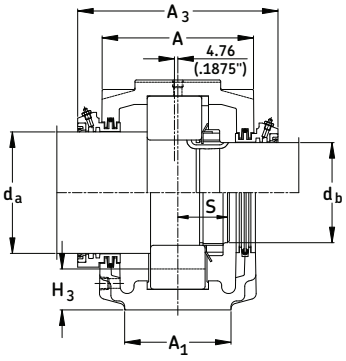

Shaft Dia. d_a	Shaft Dia. d_b	Complete Pillow Block Assembly**	Housing	Triple Seal Ring For Shaft Dia. d_a***	Triple Seal Ring For Shaft Dia. d_a***	Bearing	Lock Nut	Lock Washer	Fixing Rings	Qty.	Mass Complete		End Cover
in/mm	in/mm										lb.	kg.	
3 1/4	2 5/8	(F)SAF 1314	(F)SAF 314	LOR 64	LOR 43	1314	N 14	W 14	SR 1614	2	39.0	17.7	EPR 8
		(F)SAF 22314	(F)SAF 314	LOR 64	LOR 43	22314 E	N 14	W 14	SR 17-14	1	42.0	19.0	EPR 8
3 7/16	2 13/16	(F)SAF 22215	(F)SAF 215	LOR 79	LOR 46	22215 E	AN 15	W 15	SR 15-0	1	27	12.2	EPR 8
		(F)SAF 1315	(F)SAF 315	LOR 79	LOR 46	1315	AN 15	W 15	SR 1615	2	49.0	22.2	EPR 8
		(F)SAF 22315	(F)SAF 315	LOR 79	LOR 46	22315 E	AN 15	W 15	SR 18-15	1	53.0	24.0	EPR 8
3 5/8	3	(F)SAF 1316	(F)SAF 316	LOR 84	LOR 60	1316	AN 16	W 16	SR 1616	2	58.0	26.3	EPR 10
		(F)SAF 22216	(F)SAF 216	LOR 82	LOR 54	22216 E	AN 16	W 16	SR 16-13	1	35.0	15.9	EPR 9
		SAFS 22216	SAFS 216	LOR 82	LOR 54	22216 E	AN 16	W 16	SR 16-13	1	37.5	17.0	EPR 9
		SAFS 22216-11	SAFS 216-11	LOR 82	LOR 54	22216 E	AN 16	W 16	SR 16-13	1	37.5	17.0	EPR 9
		(F)SAF 22316	(F)SAF 316	LOR 84	LOR 60	22316 E	AN 16	W 16	SR 19-16	1	63.0	28.6	EPR 10

** (F)SAF = either a 2 or 4 bolt base. Sizes 318, 222 and above are standard with 4 bolt bases. Prefix "F" not required.

*** If seals for metric shafting are required, please check SKF for availability.

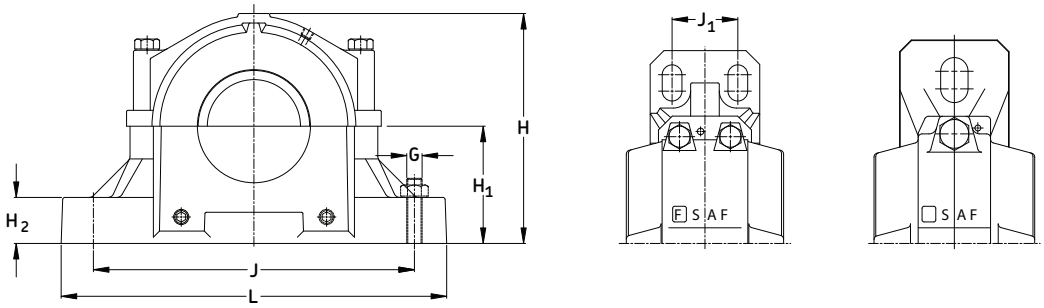

Housing No.	Dimensions						Static Oil Roller Bearing	Level H_3 Ball Bearing						Bolt (req'd)
	A_1	A_2	A_3	H	H_1	H_2			J_{max}	J_{min}	J_1	L	S	G
	in/mm													
SAF 314	3 1/2	5 3/8	8 9/32	7 3/8	3 3/4	1 1/4	1 15/32	1 9/16	11	9 7/8	-	13	*	(2) 3/4
	88.9	136.5	210.3	187.3	95.25	31.8	37.3	39.7	279.4	250.8	-	330.2	*	(2) 20
FSAF 314	3 1/2	5 3/8	8 9/32	7 3/8	3 3/4	1 1/4	1 15/32	1 9/16	11	9 7/8	2 1/8	13	*	(4) 5/8
	88.9	136.5	210.3	187.3	95.25	31.8	37.3	39.7	279.4	250.8	54.0	330.2	*	(4) 16
SAF 215	3 1/8	4 11/16	7 3/4	6 1/8	3 1/4	1 1/8	-	1 1/4	9 5/8	8 5/8	-	11 1/4	*	(2) 5/8
	79.4	119.1	196.9	155.6	82.55	28.6	-	31.8	244.5	219.1	-	285.8	*	(2) 16
FSAF 215	3 1/8	4 11/16	7 3/4	6 1/8	3 1/4	1 1/8	-	1 1/4	9 5/8	8 5/8	1 7/8	11 1/4	*	(4) 1/2
	79.4	119.1	196.9	155.6	82.55	28.6	-	31.8	244.5	219.1	47.6	285.8	*	(4) 12
SAF 315	3 7/8	5 7/8	9	7 9/16	4	1 5/8	1 19/32	1 11/16	11 5/8	10 3/8	-	13 3/4	*	(2) 3/4
	98.4	149.2	228.6	192.1	101.60	41.3	40.5	42.9	295.3	263.5	-	349.3	*	(2) 20
FSAF 315	3 7/8	5 7/8	9	7 9/16	4	1 5/8	1 19/32	1 11/16	11 5/8	10 3/8	2 1/8	13 3/4	*	(4) 5/8
	98.4	149.2	228.6	192.1	101.60	41.3	40.5	42.9	295.3	263.5	54.0	349.3	*	(4) 16
SAF 216	3 1/2	5 5/16	8 7/32	6 19/32	3 1/2	1 1/4	1 1/4	1 5/16	11	9 5/8	-	13	*	(2) 3/4
	88.9	134.9	208.8	167.5	88.90	31.8	31.8	33.3	279.4	244.5	-	330.2	*	(2) 20
FSAF 216	3 1/2	5 5/16	8 7/32	6 19/32	3 1/2	1 1/4	1 1/4	1 5/16	11	9 5/8	2 1/8	13	*	(4) 5/8
	88.9	134.9	208.8	167.5	88.90	31.8	31.8	33.3	279.4	244.5	54.0	330.2	*	(4) 16
SAFS 216	3 1/2	5 5/16	8 7/32	6 19/32	3 1/2	1 1/4	1 1/4	1 5/16	11	9 5/8	-	13	*	(2) 3/4
	88.9	134.9	208.8	167.5	88.90	31.8	31.8	33.3	279.4	244.5	-	330.2	*	(2) 20
SAFS 216-11	3 1/2	5 5/16	8 7/32	6 19/32	3 1/2	1 1/4	1 1/4	1 5/16	11	9 5/8	2 1/8	13	*	(4) 5/8
	88.9	134.9	208.8	167.5	88.90	31.8	31.8	33.3	279.4	244.5	54.0	330.2	*	(4) 16
SAF 316	3 7/8	6 1/2	9 3/16	8 1/4	4 1/4	1 5/16	1 11/16	1 13/16	12 5/8	10 5/8	-	14 1/4	*	(2) 3/4
	98.4	165.1	233.4	209.6	107.95	33.3	42.9	46.0	320.7	269.9	-	362.0	*	(2) 20
FSAF 316	3 7/8	6 1/2	9 3/16	8 1/4	4 1/4	1 5/16	1 11/16	1 13/16	12 5/8	10 5/8	2 1/8	14 1/4	*	(4) 5/8
	98.4	165.1	233.4	209.6	107.95	33.3	42.9	46.0	320.7	269.9	54.0	362.0	*	(4) 16

NOTE: Dimension "S" indicates the shaft length from centre of bearing to end of shaft for housings with one end closed.
For tabulation of dimension "S" See bearing tables on pages 52 and 53.

For an example on how to order, please see page 169.

Series SAF
Pillow block of cast iron for bearings with adapter sleeves, grease or oil lubrication
d_a 3 15/16 - 4 1/8 in
d_b 3 3/16 - 3 3/8 in

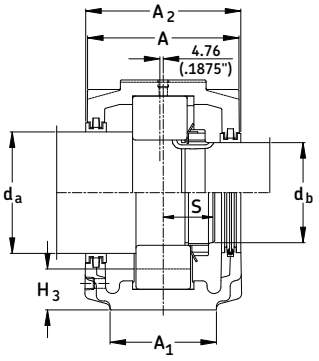

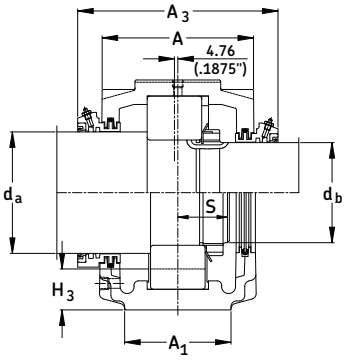

Shaft Dia. d_a	d_b	Complete Pillow Block Assembly**	Housing	Triple Seal Ring For Shaft Dia. d_a***	d_a***	Bearing	Lock Nut	Lock Washer	Fixing Rings	Qty.	Mass Complete lb.	kg.	End Cover
in/mm	in/mm												
3 15/16	3 3/16	(F)SAF 1317	(F)SAF 317	LOR 109	LOR 188	1317	AN 17	W 17	SR 1617	2	68.0	30.8	EPR 11
		(F)SAF 22217	(F)SAF 217	LOR 89	LOR 63	22217 E	AN 17	W 17	SR 17-14	1	38.0	17.2	EPR 9
		SAFS 22217	SAFS 217	LOR 89	LOR 63	22217 E	AN 17	W 17	SR 17-14	1	42.8	19.4	EPR 9
		SAFS 22217-11	SAFS 217-11	LOR 89	LOR 63	22217 E	AN 17	W 17	SR 17-14	1	42.8	19.4	EPR 9
		(F)SAF 22317	(F)SAF 317	LOR 109	LOR 188	22317 E	AN 17	W 17	SR 20-17	1	81.0	36.7	EPR 11
4 1/8	3 3/8	SAF 1318	SAF 318	LOR 112	LOR 191	1318	AN 18	W 18	SR 1618	2	75.0	34.0	EPR 11
		(F)SAF 22218	(F)SAF 218	LOR 112	LOR 191	22218 E	AN 18	W 18	SR 18-15	1	45.0	20.4	EPR 11
		SAFS 22218	SAFS 218	LOR 112	LOR 191	22218 E	AN 18	W 18	SR 18-15	1	48.0	21.8	EPR 11
		SAFS 22218-11	SAFS 218-11	LOR 112	LOR 191	22218 E	AN 18	W 18	SR 18-15	1	48.0	21.8	EPR 11
		SAF 22318	SAF 318	LOR 112	LOR 191	22318 E	AN 18	W 18	SR 21-18	1	94.0	42.6	EPR 11

** (F)SAF = either a 2 or 4 bolt base. Sizes 318, 222 and above are standard with 4 bolt bases. Prefix "F" not required.

*** If seals for metric shafting are required, please check SKF for availability.

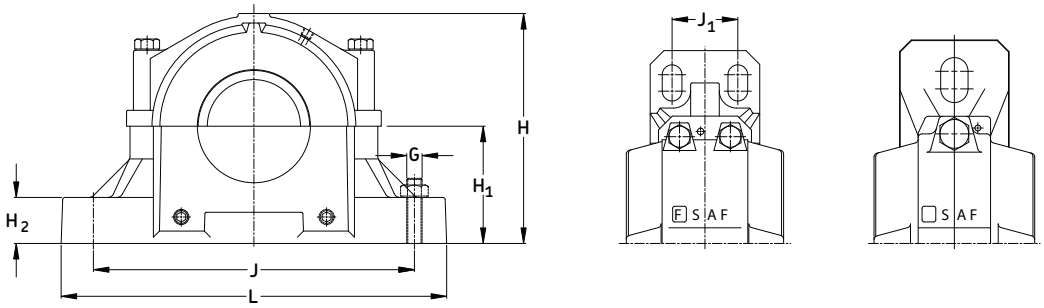

Housing No.	Dimensions						Static Oil Roller Bearing	Level H_3 Ball Bearing						Bolt (req'd)
	A_1	A_2	A_3	H	H_1	H_2			J_{max}	J_{min}	J_1	L	S	G
	in/mm													
SAF 217	3 1/2	5	7 13/16	7 1/8	3 3/4	1 1/4	1 3/8	1 7/16	11	9 7/8	-	13	*	(2) 3/4
	88.9	127.0	198.4	181.0	95.25	31.8	34.9	36.5	279.4	250.8	-	330.2	*	(2) 20
FSAF 217	3 1/2	5	7 13/16	7 1/8	3 3/4	1 1/4	1 3/8	1 7/16	11	9 7/8	2 1/8	13	*	(4) 5/8
	88.9	127.0	198.4	181.0	95.25	31.8	34.9	36.5	279.4	250.8	54.0	330.2	*	(4) 16
SAFS 217	3 1/2	5	7 13/16	7 1/8	3 3/4	1 1/4	1 3/8	1 7/16	11	9 7/8	-	13	*	(2) 3/4
	88.9	127.0	198.4	181.0	95.25	31.8	34.9	36.5	279.4	250.8	-	330.2	*	(2) 20
SAFS 217-11	3 1/2	5	7 13/16	7 1/8	3 3/4	1 1/4	1 3/8	1 7/16	11	9 7/8	2 1/8	13	*	(4) 5/8
	88.9	127.0	198.4	181.0	95.25	31.8	34.9	36.5	279.4	250.8	54.0	330.2	*	(4) 16
SAF 317	4 3/8	6 3/4	9 9/32	8 3/4	4 1/2	1 3/4	1 3/4	1 7/8	13 1/8	11 5/8	-	15 1/4	*	(2) 7/8
	111.1	171.5	235.7	222.3	114.30	44.5	44.5	47.63	333.4	295.3	-	387.4	*	(2) 22
FSAF 317	4 3/8	6 3/4	9 9/32	8 3/4	4 1/2	1 3/4	1 3/4	1 7/8	13 1/8	11 5/8	2 3/8	15 1/4	*	(4) 3/4
	111.1	171.5	235.7	222.3	114.30	44.5	44.5	47.63	333.4	295.3	60.3	387.4	*	(4) 20
SAF 218	3 7/8	5 7/8	8 3/8	7 9/16	4	1 5/8	1 1/2	1 1/2	11 3/4	10 1/4	-	13 3/4	*	(2) 3/4
	98.4	149.2	212.7	192.1	101.60	41.3	38.1	38.1	298.5	260.4	-	349.3	*	(2) 20
FSAF 218	3 7/8	5 3/4	8 3/8	7 9/16	4	1 5/8	1 1/2	1 1/2	11 3/4	10 1/4	2 1/8	13 3/4	*	(4) 5/8
	98.4	146.1	212.7	192.1	101.60	41.3	38.1	38.1	298.5	260.4	54.0	349.3	*	(4) 16
SAFS 218	3 7/8	5 7/8	8 3/8	7 9/16	4	1 5/8	1 1/2	1 1/2	11 3/4	10 1/4	-	13 3/4	*	(2) 3/4
	98.4	149.2	212.7	192.1	101.60	41.3	38.1	38.1	298.5	260.4	-	349.3	*	(2) 20
SAFS 218-11	3 7/8	5 3/4	8 3/8	7 9/16	4	1 5/8	1 1/2	1 1/2	11 3/4	10 1/4	2 1/8	13 3/4	*	(4) 5/8
	98.4	146.1	212.7	192.1	101.60	41.3	38.1	38.1	298.5	260.4	54.0	349.3	*	(4) 16
SAF 318	4 3/8	6 7/8	9 1/2	9 3/16	4 3/4	2	1 7/8	2	13 1/2	12	2 1/4	15 1/2	*	(4) 3/4
	111.1	174.6	241.3	233.4	120.65	50.8	47.6	50.80	342.9	304.8	57.2	393.7	*	(4) 20

NOTE: Dimension "S" indicates the shaft length from centre of bearing to end of shaft for housings with one end closed. For tabulation of dimension "S" See bearing tables on pages 52 and 53.

For an example on how to order, please see page 169.

Series SAF
Pillow block of cast iron for bearings with adapter sleeves, grease or oil lubrication
d_a 4 1/2 - 5 5/16 in
d_b 3 13/16 - 4 9/16 in

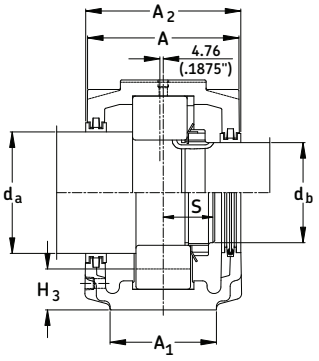

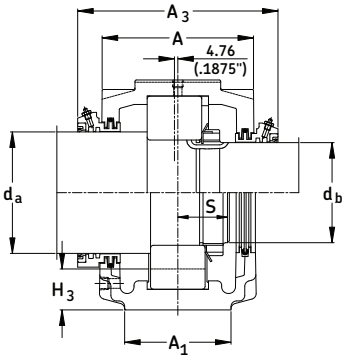

Shaft Dia. d_a	d_b	Complete Pillow Block Assembly**	Housing	Triple Seal Ring For Shaft Dia. d_a***	d_a***	Bearing	Lock Nut	Lock Washer	Fixing Rings	Qty.	Mass Complete lb.	kg.	End Cover
in/mm	in/mm												
4 1/2	3 13/16	SAF 1320	SAF 320	LOR 118	LOR 106	1320	AN 20	W 20	SR 1620	2	93.0	42.2	EPR 12
		(F)SAF 22220	(F)SAF 220	LOR 118	LOR 106	22220 E	AN 20	W 20	SR 20-17	1	71.0	32.2	EPR 12
		SAFS 22220	SAFS 220	LOR 118	LOR 106	22220 E	AN 20	W 20	SR 20-17	1	75.9	34.4	EPR 12
		SAFS 22220-11	SAFS 220-11	LOR 118	LOR 106	22220 E	AN 20	W 20	SR 20-17	1	75.9	34.4	EPR 12
		SAF 22320	SAF 320	LOR 118	LOR 106	22320 E	AN 20	W 20	SR 24-20	1	120	54.4	EPR 12
4 7/8	4 3/16	SAF 1322	SAF 322	LOR 121	LOR 113	1322	AN 22	W 22	SR 1622	2	125	56.7	EPR 14
		SAF 22222	SAF 222	LOR 121	LOR 113	22222 E	AN 22	W 22	SR 22-19	1	94.0	42.6	EPR 14
		SAFS 22222	SAFS 222	LOR 121	LOR 113	22222 E	AN 22	W 22	SR 22-19	1	100	45.6	EPR 14
		SAF 22322	SAF 322	LOR 121	LOR 113	22322 E	AN 22	W 22	SR 0-22	1	160	72.6	EPR 14
5 5/16	4 9/16	SAF 22224	SAF 224	LOR 127	LOR 119	22224 E	AN 24	W 24	SR 24-20	1	110	49.9	EPR 15
		SAFS 22224	SAFS 224	LOR 127	LOR 119	22224 E	AN 24	W 24	SR 24-20	1	118	53.4	EPR 15
		SAF 22324	SAF 324	LOR 127	LOR 119	22324CC/W33	AN 24	W 24	SR 0-24	1	215	97.5	EPR 15

** (F)SAF = either a 2 or 4 bolt base. Sizes 318, 222 and above are standard with 4 bolt bases. Prefix "F" not required.

*** If seals for metric shafting are required, please check SKF for availability.

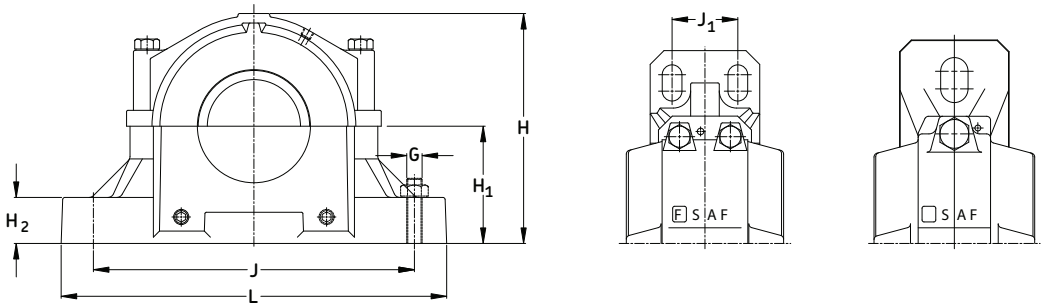

Housing No.	Dimensions						Static Oil Level						Bolt (req'd)
	A_1	A_2	A_3	H	H_1	H_2	H_3	J_{max}	J_{min}	J_1	L	S	G
	in/mm												
SAF 220	4 3/8	6 1/8	8 5/8	8 15/32	4 1/2	1 3/4	1 21/32	13 1/8	11 5/8	-	15 1/4	*	(2) 7/8
	111.1	155.6	219.1	215.1	114.30	44.5	42.1	333.4	295.3	-	387.4	*	(2) 22
FSAF 220	4 3/8	6 1/8	8 5/8	8 15/32	4 1/2	1 3/4	1 21/32	13 1/8	11 5/8	2 3/8	15 1/4	*	(4) 3/4
	111.1	155.6	219.1	215.1	114.30	44.5	42.1	333.4	295.3	60.3	387.4	*	(4) 20
SAFS 220	4 3/8	6 1/8	8 5/8	8 15/32	4 1/2	1 3/4	1 21/32	13 1/8	11 5/8	2 3/8	15 1/4	*	(2) 7/8
	111.1	155.6	219.1	215.1	114.30	44.5	42.1	333.4	295.3	60.3	387.4	*	(2) 22
SAFS 220-11	4 3/8	6 1/8	8 5/8	8 15/32	4 1/2	1 3/4	1 21/32	13 1/8	11 5/8	2 3/8	15 1/4	*	(4) 3/4
	111.1	155.6	219.1	215.1	114.30	44.5	42.1	333.4	295.3	60.3	387.4	*	(4) 20
SAF 320	4 3/4	7 3/8	10	10 3/16	5 1/4	2 1/8	2 1/32	14 1/2	13 1/4	2 3/4	16 1/2	*	(4) 3/4
	120.7	187.3	254.0	258.8	133.35	54.0	51.6	368.3	336.6	69.9	419.1	*	(4) 20
SAF 222	4 3/4	6 1/2	9 1/8	9 27/32	4 15/16	2	1 25/32	14 1/2	12 5/8	2 3/4	16 1/2	*	(4) 3/4
	120.7	165.1	231.8	250.0	125.41	50.8	45.2	368.3	320.7	69.9	419.1	*	(4) 20
SAFS 222	4 3/4	6 1/2	9 1/8	9 27/32	4 15/16	2	1 25/32	14 1/2	12 5/8	2 3/4	16 1/2	*	(4) 3/4
	120.65	165.10	231.78	250.03	125.41	50.80	45.24	368.30	320.68	69.9	419.10	*	(4) 20
SAF 322	5 1/4	8 1/8	10 3/4	11 5/16	6	2 3/8	2 13/32	16	14 5/8	3 1/4	18 3/8	*	(4) 7/8
	133.4	206.4	273.1	287.3	152.40	60.3	61.1	406.4	371.5	82.6	466.7	*	(4) 22
SAF 224	4 3/4	7 3/8	10	10 1/8	5 1/4	2 1/8	1 27/32	14 1/2	13 1/4	2 3/4	16 1/2	*	(4) 3/4
	120.7	187.3	254.0	257.2	133.35	54.0	46.8	368.3	336.6	69.9	419.1	*	(4) 20
SAFS 224	4 3/4	7 3/8	10	10 1/8	5 1/4	2 1/8	1 27/32	14 1/2	13 1/4	2 3/4	16 1/2	*	(4) 3/4
	120.7	187.3	254.0	257.2	133.35	54.0	46.8	368.3	336.6	69.9	419.1	*	(4) 20
SAF 324	6 1/4	8 3/8	11	12 1/2	6 5/16	2 1/2	2 3/8	18 1/4	17	3 3/4	21 1/4	*	(4) 1
	158.75	212.7	279.4	317.5	160.34	63.5	60.325	463.55	431.8	95.3	539.75	*	(4) 24

NOTE: Dimension "S" indicates the shaft length from centre of bearing to end of shaft for housings with one end closed. For tabulation of dimension "S" See bearing tables on pages 52 and 53.

For an example on how to order, please see page 169.

Series SAF
Pillow block of cast iron for bearings with adapter sleeves, grease or oil lubrication
d_a 5 7/8 - 7 in
d_b 4 15/16 - 6 1/16 in

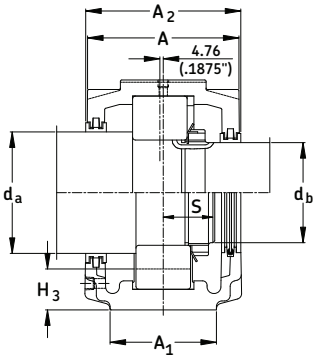

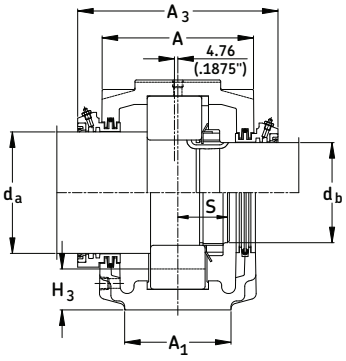

Shaft Dia. d_a	d_b	Complete Pillow Block Assembly	Housing	Triple Seal Ring For Shaft Dia. d_a***	d_a***	Bearing	Lock Nut	Lock Washer	Fixing Rings	Qty.	Mass Complete lb.	kg.	End Cover
in/mm	in/mm												
5 7/8	4 15/16	SAF 22226	SAF 226	LOR 136	LOR 122	22226 E	AN 26	W 26	SR 26-0	1	150	68.0	EPR 27
		SAFS 22226	SAFS 226	LOR 136	LOR 122	22226 E	AN 26	W 26	SR 26-0	1	160	72.7	EPR 27
		SAF 22326	SAF 326	LOR 136	LOR 122	22326CC/W33	AN 26	W 26	SR 0-26	1	250	113	EPR 27
6 1/4	5 5/16	SAF 22228	SAF 228	LOR 144	LOR 127	22228CC/W33	AN 28	W 28	SR 28-0	1	160	72.6	EPR 16
		SAFS 22228	SAFS 228	LOR 144	LOR 127	22228CC/W33	AN 28	W 28	SR 28-0	1	171	77.7	EPR 16
		SAF 22328	SAF 328	LOR 144	LOR 127	22328CC/W33	AN 28	W 28	SR 0-28	1	320	145	EPR 16
6 5/8	5 3/4	SAF 22230	SAF 230	LOR 151	LOR 134	22230CC/W33	AN 30	W 30	SR 30-0	1	205	93.0	EPR 17
		SAFS 22230	SAFS 230	LOR 151	LOR 134	22230CC/W33	AN 30	W 30	SR 30-0	1	219	99.5	EPR 17
		SAF 22330	SAF 330	LOR 151	LOR 134	22330CC/W33	AN 30	W 30	SR 36-30	1	350	159	EPR 17
7	6 1/16	SAF 22232	SAF 232	LOR 156	LOR 142	22232CC/W33	AN 32	W 32	SR 32-0	1	230	104	EPR 18
		SAFS 22232	SAFS 232	LOR 156	LOR 142	22232CC/W33	AN 32	W 32	SR 32-0	1	245	111.4	EPR 18
		SAF 22332	SAF 332	LOR 156	LOR 142	22332CC/W33	AN 32	W 32	SR 38-32	1	410	186	EPR 18

*** If seals for metric shafting are required, please check SKF for availability.

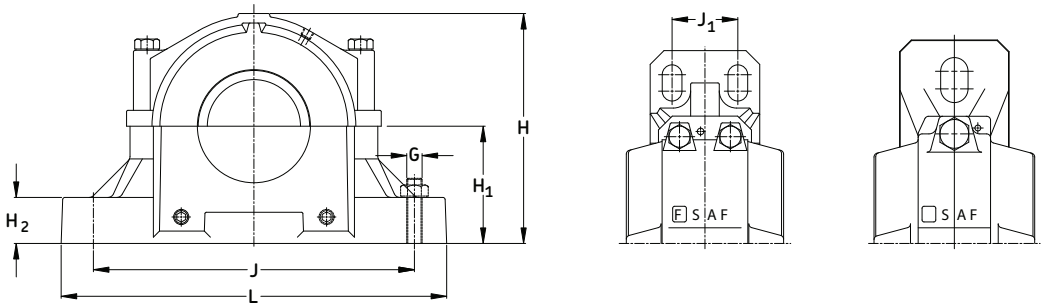

Housing No.	Dimensions						Static Oil Level						Bolt (req'd)
	A_1	A_2	A_3	H	H_1	H_2	H_3	J_{max}	J_{min}	J_1	L	S	G
	in/mm												
SAF 226	5 1/4	7 5/8	10 5/8	11 5/16	6	2 3/8	2 3/8	16	14 5/8	3 1/4	18 3/8	*	(4) 7/8
	133.4	193.7	269.9	287.3	152.40	60.3	60.3	406.4	371.5	82.6	466.7	*	(4) 22
SAFS 226	5 1/4	7 5/8	10 5/8	11 5/16	6	2 3/8	2 3/8	16	14 5/8	3 1/4	18 3/8	*	(4) 7/8
	133.4	193.7	269.9	287.3	152.40	60.3	60.3	406.4	371.5	82.6	466.7	*	(4) 22
SAF 326	6 1/4	8 3/4	11 3/8	13 5/16	6 11/16	2 5/8	2 7/16	19 1/4	17 3/8	3 3/4	22	*	(4) 1
	158.8	222.3	288.9	338.1	169.86	66.7	61.9	489.0	441.3	95.3	558.8	*	(4) 24
SAF 228	5 7/8	7 5/8	10 1/4	12 1/32	6	2 3/8	2 1/32	17 3/8	15 5/8	3 3/8	20 1/8	*	(4) 1
	149.2	193.7	260.4	305.6	152.40	60.3	51.6	441.3	396.9	85.7	511.2	*	(4) 24
SAFS 228	5 7/8	7 5/8	10 1/4	12 1/32	6	2 3/8	2 1/32	17 3/8	15 5/8	3 3/8	20 1/8	*	(4) 1
	149.2	193.7	260.4	305.6	152.40	60.3	51.6	441.3	396.9	85.7	511.2	*	(4) 24
SAF 328	6 3/4	9 3/8	12 1/8	14 3/16	7 1/16	2 3/4	2 9/16	21 5/8	19 3/8	4 1/4	24 3/4	*	(4) 1
	171.5	238.1	308.0	360.4	179.39	69.9	65.1	549.3	492.1	108.0	628.7	*	(4) 24
SAF 230	6 1/4	8 3/8	11	12 1/2	6 5/16	2 1/2	2	18 1/4	17	3 3/4	21 1/4	*	(4) 1
	158.8	212.7	279.4	317.5	160.34	63.5	50.8	463.6	431.8	95.3	539.8	*	(4) 24
SAFS 230	6 1/4	8 3/8	11	12 1/2	6 5/16	2 1/2	2	18 1/4	17	3 3/4	21 1/4	*	(4) 1
	158.8	212.7	279.4	317.5	160.34	63.5	50.8	463.6	431.8	95.3	539.8	*	(4) 24
SAF 330	7 1/8	9 3/4	12 1/2	14 7/8	7 1/2	3	2 5/8	23 5/8	20 7/8	4 5/8	26 3/4	*	(4) 1
	181.0	247.7	317.5	377.8	190.50	76.2	66.7	600.1	530.2	117.5	679.5	*	(4) 24
SAF 232	6 1/4	8 3/4	11 3/8	13 5/16	6 11/16	2 5/8	2 1/16	19 1/4	17 3/8	3 3/4	22	*	(4) 1
	158.8	222.3	288.9	338.1	169.86	66.7	52.4	489.0	441.3	95.3	558.8	*	(4) 24
SAFS 232	6 1/4	8 3/4	11 3/8	13 5/16	6 11/16	2 5/8	2 1/16	19 1/4	17 3/8	3 3/4	22	*	(4) 1
	158.8	222.3	288.9	338.1	169.86	66.7	52.4	489.0	441.3	95.3	558.8	*	(4) 24
SAF 332	7 1/2	10 3/4	13 3/8	15 11/16	7 7/8	3 1/8	2 11/16	24 3/8	21 5/8	4 1/2	28	*	(4) 1 1/4
	190.5	273.1	339.7	398.5	200.03	79.4	68.3	619.1	549.3	114.3	711.2	*	(4) 30

NOTE: Dimension "S" indicates the shaft length from centre of bearing to end of shaft for housings with one end closed.
For tabulation of dimension "S" See bearing tables on pages 52 and 53.

For an example on how to order, please see page 169.

Series SAF
Pillow block of cast iron for bearings with adapter sleeves, grease or oil lubrication
d_a 7 7/16 - 9 9/16 in
d_b 6 7/16 - 8 5/16 in

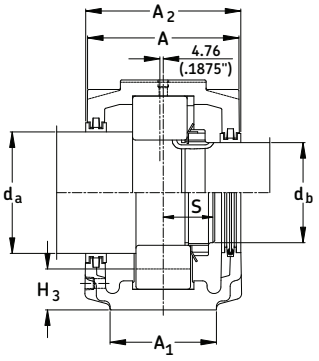

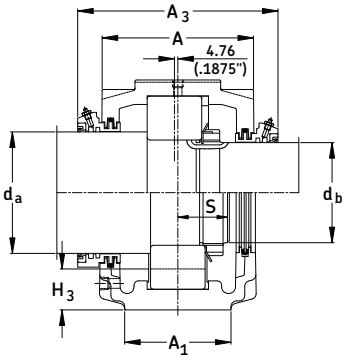

Shaft Dia. d_a	d_b	Complete Pillow Block Assembly	Housing	Triple Seal Ring For Shaft Dia. d_a***	d_a***	Bearing	Lock Nut	Lock Washer	Fixing Rings	Qty.	Mass Complete lb.	kg.	End Cover
in/mm	in/mm												
7 7/16	6 7/16	SAF 22234	SAF 234	LOR 161	LOR 148	22234CC/W33	AN 34	W 34	SR 34-0	1	290	132	EPR 19
		SAFS 22234	SAFS 234	LOR 161	LOR 148	22234CC/W33	AN 34	W 34	SR 34-0	1	310	141	EPR 19
		SAF 22334	SAF 334	LOR 161	LOR 148	22334CC/W33	AN 34	W 34	SR 40-34	1	485	220	EPR 19
7 13/16	6 7/8	SAF 22236	SAF 236	LOR 165	LOR 154	22236CC/W33	AN 36	W 36	SR 36-30	1	325	147	EPR 20
		SAFS 22236	SAFS 236	LOR 165	LOR 154	22236CC/W33	AN 36	W 36	SR 36-30	1	346	157	EPR 20
8 3/8	7 1/4	SAF 22238	SAF 238	LOR 171	LOR 160	22238CC/W33	AN 38	W 38	SR 38-32	1	385	175	EPR 21
		SAFS 22238	SAFS 238	LOR 171	LOR 160	22238CC/W33	AN 38	W 38	SR 38-32	1	413	187	EPR 21
		SAF 22338	SAF 338	LOR 171	LOR 160	22338 CC/W33	AN 38	W 38	SR 44-38	1	655	297	EPR 21
8 3/4	7 5/8	SAF 22240	SAF 240	LOR 175	LOR 164	22240CC/W33	AN 40	W 40	SR 40-34	1	460	209	EPR 22
		SAFS 22240	SAFS 240	LOR 175	LOR 164	22240CC/W33	AN 40	W 40	SR 40-34	1	493	224	EPR 22
9 9/16	8 5/16	SAF 22244	SAF 244	LOR 179	LOR 170	22244CC/W33	N 44	W 44	SR 44-38	1	635	288	EPR 24
		SAFS 22244	SAFS 244	LOR 179	LOR 170	22244CC/W33	N 44	W 44	SR 44-38	1	679	308	EPR 24

*** If seals for metric shafting are required, please check SKF for availability.

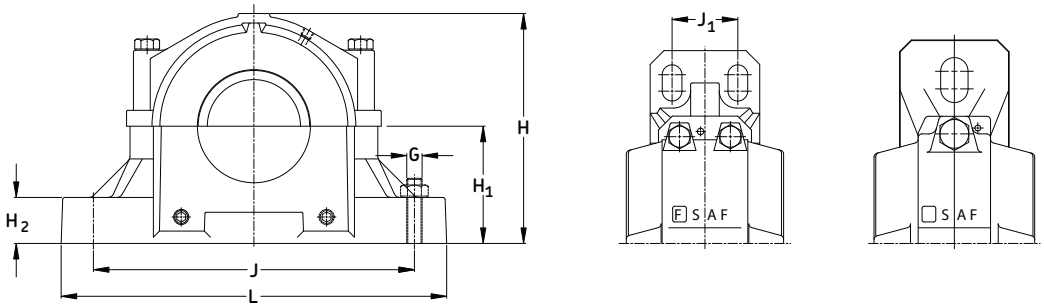

Housing No.	Dimensions						Static Oil Level						Bolt (req'd)
	A_1	A_2	A_3	H	H_1	H_2	H_3	J_{max}	J_{min}	J_1	L	S	G
	in/mm												
SAF 234	6 3/4	9 5/8	12 3/8	14 3/16	7 1/16	2 3/4	2 5/32	21 5/8	19 3/8	4 1/4	24 3/4	*	(4) 1
	171.45	244.48	314.33	360.36	179.39	69.85	54.77	549.28	492.13	107.95	628.65	*	(4) 24
SAFS 234	6 3/4	9 5/8	12 3/8	14 3/16	7 1/16	2 3/4	2 5/32	21 5/8	19 3/8	4 1/4	24 3/4	*	(4) 1
	171.45	244.48	314.33	360.36	179.39	69.85	54.77	549.28	492.13	107.95	628.65	*	(4) 24
SAF 334	8	11 1/4	14 1/8	16 1/2	8 1/4	3 3/8	2 3/4	25	22 1/2	5	29 1/2	*	(4) 1 1/4
	203.20	285.75	358.78	419.10	209.55	85.73	69.85	635.00	571.50	127.00	749.30	*	(4) 30
SAF 236	7 1/8	10	12 1/2	14 7/8	7 1/2	3	2 3/8	23 5/8	20 7/8	4 5/8	26 3/4	*	(4) 1
	180.98	254.00	317.50	377.83	190.50	76.20	60.33	600.08	530.23	117.48	679.45	*	(4) 24
SAFS 236	7 1/8	10	12 1/2	14 7/8	7 1/2	3	2 3/8	23 5/8	20 7/8	4 5/8	26 3/4	*	(4) 1
	180.98	254.00	317.50	377.83	190.50	76.20	60.33	600.08	530.23	117.48	679.45	*	(4) 24
SAF 238	7 1/2	10 3/4	14 7/8	15 11/16	7 7/8	3 1/8	2 7/16	24 3/8	21 5/8	4 1/2	28	*	(4) 1 1/4
	190.50	273.05	377.83	398.46	200.03	79.38	61.91	619.13	549.28	114.30	711.20	*	(4) 30
SAFS 238	7 1/2	10 3/4	14 7/8	15 11/16	7 7/8	3 1/8	2 7/16	24 3/8	21 5/8	4 1/2	28	*	(4) 1 1/4
	190.50	273.05	377.83	398.46	200.03	79.38	61.91	619.13	549.28	114.30	711.20	*	(4) 30
SAF 338	8 3/4	12	16 1/8	18 5/8	9 1/2	3 3/4	3 3/8	27 7/8	24 3/4	5 1/4	32 3/4	*	(4) 1 1/2
	222.25	304.80	409.58	473.08	241.30	95.25	85.73	708.03	628.65	133.35	831.85	*	(4) 36
SAF 240	8	11 1/4	15 3/8	16 1/2	8 1/4	3 3/8	2 15/32	25	22 1/2	5	29 1/2	*	(4) 1 1/4
	203.20	285.75	390.53	419.10	209.55	85.73	62.71	635.00	571.50	127.00	749.30	*	(4) 30
SAFS 240	8	11 1/4	15 3/8	16 1/2	8 1/4	3 3/8	2 15/32	25	22 1/2	5	29 1/2	*	(4) 1 1/4
	203.20	285.75	390.53	419.10	209.55	85.73	62.71	635.00	571.50	127.00	749.30	*	(4) 30
SAF 244	8 3/4	12	16 1/8	18 5/8	9 1/2	3 3/4	3 1/8	27 7/8	24 3/4	5 1/4	32 3/4	*	(4) 1 1/2
	222.25	304.80	409.58	473.08	241.30	95.25	79.38	708.03	628.65	133.35	831.85	*	(4) 36
SAFS 244	8 3/4	12	16 1/8	18 5/8	9 1/2	3 3/4	3 1/8	27 7/8	24 3/4	5 1/4	32 3/4	*	(4) 1 1/2
	222.25	304.80	409.58	473.08	241.30	95.25	79.38	708.03	628.65	133.35	831.85	*	(4) 36

NOTE: Dimension "S" indicates the shaft length from centre of bearing to end of shaft for housings with one end closed.
For tabulation of dimension "S" See bearing tables on pages 52 and 53.

For an example on how to order, please see page 169.

Pillow Block Housings

SDCD, SDCD/MC14

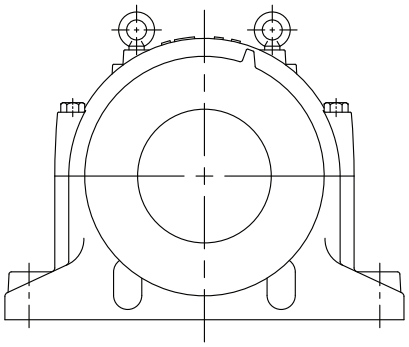

MATERIAL	Ductile Iron ASTM A536 grade 65-45-12	
BEARING SERIES USED	230CCK, 231CCK, 232CCK	
SHAFT SIZE RANGE	5-15/16" to 16.142"	150mm to 410mm
PILLOW BLOCK SIZE	3036 - 3088 (adapter mounting) 3134 - 3188 (adapter mounting) 3234 - 3280 (adapter mounting)	
PILLOW BLOCK LUBRICATION	Grease or Oil	
STANDARD SEALS	TS 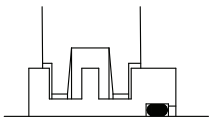	
OPTIONAL SEALS	TSDC-D 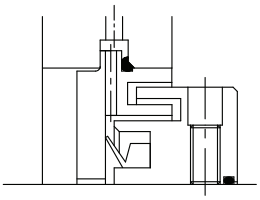	TSDC-E 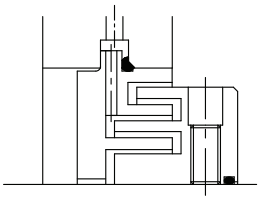

Note : Pillow Block SDCD must be modified to MC14 when using TSDC-D & E type seals.

SDCD Adapter Mounting

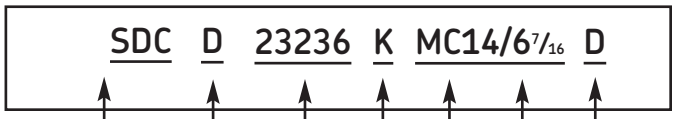

Base

Four bolt base is standard

Material

D Ductile iron (standard)

T Cast steel

Size

Bearing bore 36 = 180mm

Adapter mount

Modification

(For tactonite seals)

Shaft size

6 7/16"

Suffixes

0 Standard "TS" triple ring seal

D Taconite service seal of TSDC design, c/w V ring

E Taconite service seal of TSDC design, no V ring

H Held unit, c/w fixing rings

Y One end closed with end cover or end plug

How to order: (Example)

When you order one SDCD 23236KMC 14/ 6 7/16 D you will receive a package containing the following:

1 - Pillow block housing SDCD 3236/MC14: Cap drilled, tapped and plugged with three holes, (1) 1/4" NPT at the centre and two 1/8" NPT holes for the seals. Button head grease nipples are included.
2 - Taconite service seals TSDC 36/ 6 7/16 D.
1 - Bearing SKF 23236 CCK/W33.
1 - Adapter sleeve HA 2336 for shaft diameter 6 7/16".

If a "HELD or FIXED" unit is required, add the suffix "H" and 2 fixing rings (locating or stabilizing) FRB 10/320 will be included.
Only one bearing per shaft should be held. CARB® bearings displace internally and are therefore always "FREE".
However, they must always be located in the housing with fixing rings as does a true "FIXED" bearing.
If a unit with one end closed is required, add the suffix "Y" and one ASDC 36 end cover will be included.

SDCD 3000, SDCD 3100, SDCD 3200, SDCD 3000/MC14, SDCD 3100/MC14, SDCD 3200/MC14

Pillow blocks of ductile iron for bearings with adapter sleeve and grease or oil lubrication

d_a 150 - 160 mm (5 15/16 - 6 in)

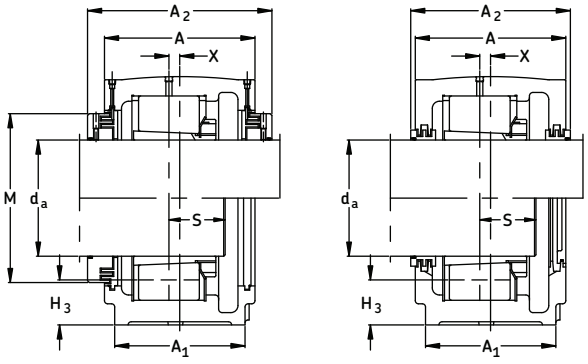

Shaft Dia.	Complete Pillow Block Assembly	Housing	Seal	Bearing	Adapter Sleeve	Fixing Rings (2 req'd)	Mass Complete		End Cover
mm/in							lb.	kg.	
150	SDCD 23134K/150	SDCD3134	TS34	23134CCK/W33	H 3134	FRB 10/280	230	104	ETS34
	SDCD 23234K/150	SDCD3234	TS38/150	23234CCK/W33	H 2334	FRB 10/310	350	159	ETS38
	SDCD 23134KMC14/150D	SDCD3134/MC14	TSDC34/150D	23134CCK/W33	H 3134	FRB 10/280	230	104	ASDC34
	SDCD 23234KMC14/150D	SDCD3234/MC14	TSDC34/150D	23234CCK/W33	H 2334	FRB 10/310	350	159	ASDC34
5 15/16	SDCD 23134K/5 15/16	SDCD3134	TS34/5 15/16	23134CCK/W33	HA 3134	FRB 10/280	230	104	ETS34
	SDCD 23234K/5 15/16	SDCD3234	TS38/5 15/16	23234CCK/W33	HA 2334	FRB 10/310	350	159	ETS38
	SDCD 23134KMC14/5 15/16 D	SDCD3134/MC14	TSDC34/5 15/16 D	23134CCK/W33	HA 3134	FRB 10/280	230	104	ASDC34
	SDCD 23234KMC14/5 15/16 D	SDCD3234/MC14	TSDC34/5 15/16 D	23234CCK/W33	HA 2334	FRB 10/310	350	159	ASDC34
6	SDCD 23134K/6	SDCD3134	TS34/6	23134CCK/W33	HE 3134	FRB 10/280	230	104	ETS34
	SDCD 23234K/6	SDCD3234	TS38/6	23234CCK/W33	HE 2334	FRB 10/310	350	159	ETS38
	SDCD 23134KMC14/6D	SDCD3134/MC14	TSDC34/6D	23134CCK/W33	HE 3134	FRB 10/280	230	104	ASDC34
	SDCD 23234KMC14/6D	SDCD3234/MC14	TSDC34/6D	23234CCK/W33	HE 2334	FRB 10/310	350	159	ASDC34
160	SDCD 23036K/160	SDCD3036	TS36	23036CCK/W33	H 3036	FRB 10/280	230	104	ETS36
	SDCD 23136K/160	SDCD3136	TS36	23136CCK/W33	H 3136	FRB 10/300	270	122	ETS36
	SDCD 23236K/160	SDCD3236	TS38/160	23236CCK/W33	H 2336	FRB 10/320	360	163	ETS38
	SDCD 23036KMC14/160D	SDCD3036/MC14	TSDC36/160D	23036CCK/W33	H 3036	FRB 10/280	230	104	ASDC36
	SDCD 23136KMC14/160D	SDCD3136/MC14	TSDC36/160D	23136CCK/W33	H 3136	FRB 10/300	270	122	ASDC36
	SDCD 23236KMC14/160D	SDCD3236/MC14	TSDC36/160D	23236CCK/W33	H 2336	FRB 10/320	360	163	ASDC36

Included with each triple ring seal (TS) is a length of neoprene of 4 mm dia. for mounting in the groove of the seal ring bore as added protection against oil leakage.

If oil lubrication is to be used, SKF can drill and tap the two bosses for an oil level gauge and oil drain holes, if so specified on your order. Advise the type and size of gauge you intend to use, gauges are not supplied by SKF.

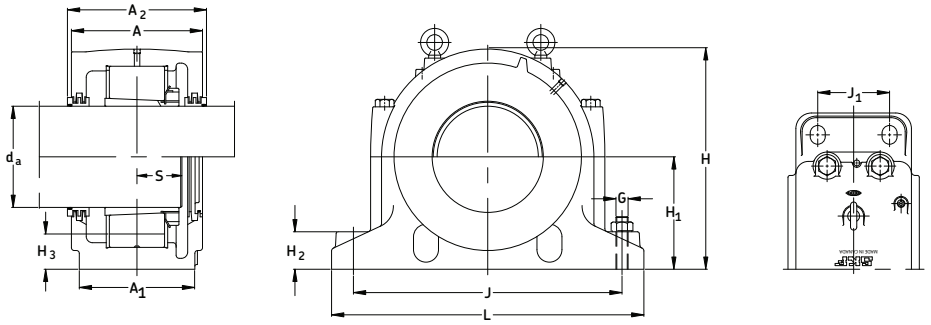

Housing No.	Dimensions							Static Oil Level								Bolts (4 req'd)
	A	A_1	A_2	X*	H	H_1	H_2	H_{3max}	H_{3min}	L	J_{max}	J_{min}	J_1	M	S**	G
	in/mm															
SDCD 3134	9 1/16	7 1/8	9 5/8	9/16	13 3/16	6.693	2 3/4	2 1/4	2 3/32	20 1/16	17 1/8	16 11/16	3 15/16	-	3 5/32	1
	230	180	246	14	335	170	70	57	53	510	436	424	100	-	79.5	24
SDCD 3234	10 1/4	8 1/4	10 5/8	13/32	14 3/4	7.480	3 3/16	2 23/32	2 1/2	22 1/16	19 1/8	18 5/8	4 3/4	-	3 9/16	1
	260	210	270	10	375	190	80	69	64	560	486	474	120	-	90.5	24
SDCD 3134/MC14	9 1/16	7 1/8	10 13/16	9/16	13 3/16	6.693	2 3/4	-	-	20 1/16	17 1/8	16 11/16	3 15/16	8 5/8	3 5/32	1
	230	180	275	14	335	170	70	-	-	510	436	424	100	219	79.5	24
SDCD 3234/MC14	10 1/4	8 1/4	12	13/32	14 3/4	7.480	3 3/16	-	-	22 1/16	19 1/8	18 5/8	4 3/4	8 5/8	3 9/16	1
	260	210	305	10	375	190	80	-	-	560	486	474	120	219	90.5	24
SDCD 3036	9 1/16	7 1/8	9 7/16	-	13 3/16	6.693	2 3/4	2 1/8	2	20 1/16	17 3/16	16 11/16	3 15/16	-	2 7/8	1
	230	180	240	-	335	170	70	54	51	510	436	424	100	-	73	24
SDCD 3136	9 7/16	7 1/2	9 7/8	19/32	14	7.087	3	2 5/16	2 3/16	20 7/8	17 15/16	17 1/2	4 3/8	-	3 11/32	1
	240	190	250	15	355	180	75	59	55	530	456	444	110	-	84.5	24
SDCD 3236	10 1/4	8 1/4	10 5/8	9/16	14 3/4	7.480	3 3/16	2 1/2	2 5/16	22 1/16	19 1/8	18 5/8	4 3/4	-	3 21/32	1
	260	210	270	14	375	190	80	64	59	560	486	474	120	-	92.5	24
SDCD 3036/MC14	9 1/16	7 1/8	10 13/16	-	13 3/16	6.693	2 3/4	-	-	20 1/16	17 3/16	16 11/16	3 15/16	9 1/16	2 7/8	1
	230	180	275	-	335	170	70	-	-	510	436	424	100	230	73	24
SDCD 3136/MC14	9 7/16	7 1/2	11 3/16	19/32	14	7.087	3	-	-	20 7/8	17 15/16	17 1/2	4 3/8	9 1/16	3 11/32	1
	240	190	284	15	355	180	75	-	-	530	456	444	110	230	84.5	24
SDCD 3236/MC14	10 1/4	8 1/4	12	9/16	14 3/4	7.480	3 3/16	-	-	22 1/16	19 1/8	18 5/8	4 3/4	9 1/16	3 21/32	1
	260	210	305	10	375	190	80	-	-	560	486	474	120	230	92.5	24

NOTE:

* Dimension "X" indicates the centreline of the bearing seat in the housing is offset this distance in relation to the centreline of the housing, away from the oil sump. When oil lubrication is used the static oil level H3 must be maintained.

** Dimension "S" indicates the shaft length from the bearing centre to the end of the shaft on the locknut side, which allows adequate clearance between the shaft end and the end cover. Normally the shaft need not be any longer than required for the adapter sleeve.

For an example on how to order please see page 183.

SDCD 3000, SDCD 3100, SDCD 3200, SDCD 3000/MC14, SDCD 3100/MC14, SDCD 3200/MC14

Pillow blocks of ductile iron for bearings with adapter sleeve and grease or oil lubrication

d_a 170 mm (6 7/16 - 6 3/4 in)

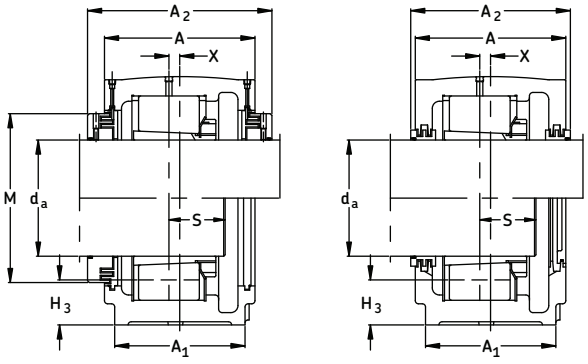

Shaft Dia.	Complete Pillow Block Assembly	Housing	Seal	Bearing	Adapter Sleeve	Fixing Rings (2 req'd)	Mass Complete		End Cover
mm/in							lb.	kg.	
6 7/16	SDCD 23036K/6 7/16	SDCD3036	TS36/6 7/16	23036CCK/W33	HA 3036	FRB 10/280	230	104	ETS36
	SDCD 23136K/6 7/16	SDCD3136	TS36/6 7/16	23136CCK/W33	HA 3136	FRB 10/300	270	122	ETS36
	SDCD 23236K/6 7/16	SDCD3236	TS38/6 7/16	23236CCK/W33	HA 2336	FRB 10/320	360	163	ETS38
	SDCD 23036KMC14/6 7/16D	SDCD3036/MC14	TSDC36/6 7/16D	23036CCK/W33	HA 3036	FRB 10/280	230	104	ASDC36
	SDCD 23136KMC14/6 7/16D	SDCD3136/MC14	TSDC36/6 7/16D	23136CCK/W33	HA 3136	FRB 10/300	270	122	ASDC36
	SDCD 23236KMC14/6 7/16D	SDCD3236/MC14	TSDC36/6 7/16D	23236CCK/W33	HA 2336	FRB 10/320	360	163	ASDC36
6 1/2	SDCD 23036K/6 1/2	SDCD3036	TS36/6 1/2	23036CCK/W33	HE 3036	FRB 10/280	230	104	ETS 36
	SDCD 23136K/6 1/2	SDCD3136	TS36/6 1/2	23136CCK/W33	HE 3136	FRB 10/300	270	122	ETS 36
	SDCD 23236K/6 1/2	SDCD3236	TS38/6 1/2	23236CCK/W33	HE 2336	FRB 10/320	360	163	ETS 38
	SDCD 23036KMC14/6 1/2D	SDCD3036/MC14	TSDC36/6 1/2D	23036CCK/W33	HE 3036	FRB 10/280	230	104	ASDC36
	SDCD 23136KMC14/6 1/2D	SDCD3136/MC14	TSDC36/6 1/2D	23136CCK/W33	HE 3136	FRB 10/300	270	122	ASDC36
	SDCD 23236KMC14/6 1/2D	SDCD3236/MC14	TSDC36/6 1/2D	23236CCK/W33	HE 2336	FRB 10/320	360	163	ASDC36
170	SDCD 23038K/170	SDCD3038	TS38	23038CCK/W33	H 3038	FRB 10/290	270	122	ETS38
	SDCD 23138K/170	SDCD3138	TS38	23138CCK/W33	H 3138	FRB 10/320	340	154	ETS38
	SDCD 23238K/170	SDCD3238	TS40/170	23238CCK/W33	H 2338	FRB 10/340	440	200	ETS40
	SDCD 23038KMC14/170D	SDCD3038/MC14	TSDC38/170D	23038CCK/W33	H 3038	FRB 10/290	270	122	ASDC38
	SDCD 23138KMC14/170D	SDCD3138/MC14	TSDC38/170D	23138CCK/W33	H 3138	FRB 10/320	340	154	ASDC38
	SDCD 23238KMC14/170D	SDCD3238/MC14	TSDC38/170D	23238CCK/W33	H 2338	FRB 10/340	440	200	ASDC38
6 3/4	SDCD 23038K/6 3/4	SDCD3038	TS38/6 3/4	23038CCK/W33	HE 3038	FRB 10/290	270	122	ETS38
	SDCD 23138K/6 3/4	SDCD3138	TS38/6 3/4	23138CCK/W33	HE 3138	FRB 10/320	340	154	ETS38
	SDCD 23238K/6 3/4	SDCD3238	TS40/6 3/4	23238CCK/W33	HE 2338	FRB 10/340	440	200	ETS40
	SDCD 23038KMC14/6 3/4D	SDCD3038/MC14	TSDC38/6 3/4D	23038CCK/W33	HE 3038	FRB 10/290	270	122	ASDC38
	SDCD 23138KMC14/6 3/4D	SDCD3138/MC14	TSDC38/6 3/4D	23138CCK/W33	HE 3138	FRB 10/320	340	154	ASDC38
	SDCD 23238KMC14/6 3/4D	SDCD3238/MC14	TSDC38/6 3/4D	23238CCK/W33	HE 2338	FRB 10/340	440	200	ASDC38

Included with each triple ring seal (TS) is a length of neoprene of 4 mm dia. for mounting in the groove of the seal ring bore as added protection against oil leakage.

If oil lubrication is to be used, SKF can drill and tap the two bosses for an oil level gauge and oil drain holes, if so specified on your order. Advise the type and size of gauge you intend to use, gauges are not supplied by SKF.

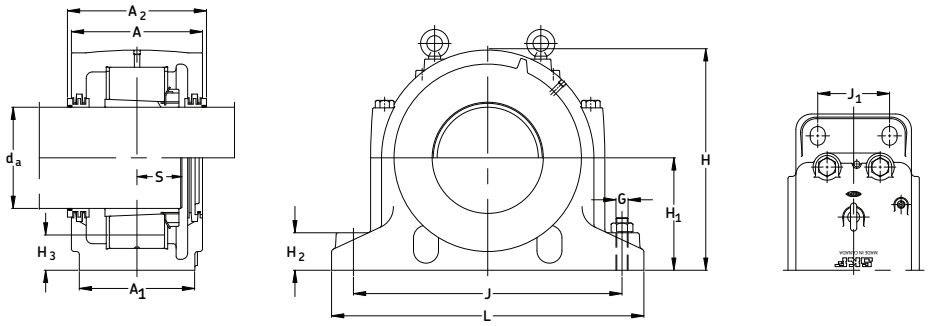

Housing No.	Dimensions							Static Oil Level								Bolts (4 req'd)
	A	A_1	A_2	X*	H	H_1	H_2	H_{3max}	H_{3min}	L	J_{max}	J_{min}	J_1	M	S**	G
	in/mm															
SDCD 3036	9 1/16	7 1/8	9 7/16	-	13 3/16	6.693	2 3/4	2 1/8	2	20 1/16	17 3/16	16 11/16	3 15/16	-	2 7/8	1
	230	180	240	-	335	170	70	54	51	510	436	424	100	-	73	24
SDCD 3136	9 7/16	7 1/2	9 7/8	19/32	14	7.087	3	2 5/16	2 3/16	20 7/8	17 15/16	17 1/2	4 3/8	-	3 11/32	1
	240	190	250	15	355	180	75	59	55	530	456	444	110	-	84.5	24
SDCD 3236	10 1/4	8 1/4	10 5/8	9/16	14 3/4	7.480	3 3/16	2 1/2	2 5/16	22 1/16	19 1/8	18 5/8	4 3/4	-	3 21/32	1
	260	210	270	14	375	190	80	64	59	560	486	474	120	-	92.5	24
SDCD 3036/MC14	9 1/16	7 1/8	10 13/16	-	13 3/16	6.693	2 3/4	-	-	20 1/16	17 3/16	16 11/16	3 15/16	9 1/16	2 7/8	1
	230	180	275	-	335	170	70	-	-	510	436	424	100	230	73	24
SDCD 3136/MC14	9 7/16	7 1/2	1 13/16	19/32	14	7.087	3	-	-	20 7/8	17 15/16	17 1/2	4 3/8	9 1/16	3 11/32	1
	240	190	284	15	355	180	75	-	-	530	456	444	110	230	84.5	24
SDCD 3236/MC14	10 1/4	8 1/4	12	9/16	14 3/4	7.480	3 3/16	-	-	22 1/16	19 1/8	18 5/8	4 3/4	9 1/16	3 21/32	1
	260	210	305	10	375	190	80	-	-	560	486	474	120	230	92.5	24
SDCD 3038	9 7/16	7 1/2	9 7/8	-	14	7.087	3	2 9/32	2 3/16	20 7/8	18	17 1/2	4 3/8	-	2 15/16	1
	240	190	250	-	355	180	75	58	55	530	456	444	110	-	74.5	24
SDCD 3138	10 1/4	8 1/4	10 5/8	13/32	14 3/4	7.480	3 3/16	2 13/32	2 1/4	22 1/16	19 1/8	18 11/16	4 3/4	-	3 17/32	1
	260	210	270	10	375	190	80	61	57	560	486	474	120	-	89.5	24
SDCD 3238	11	9 1/16	11 7/16	15/32	16 3/16	8.268	3 3/8	3	2 13/16	24	20 5/16	19 13/16	5 1/8	-	3 27/32	1 1/4
	280	230	290	12	410	210	85	76	71	610	517	503	130	-	97.5	30
SDCD 3038/MC14	9 7/16	7 1/2	11 3/16	-	14	7.087	3	-	-	22 1/16	19 1/8	18 5/8	4 3/4	10	3 1/8	1
	240	190	284	-	355	180	76	-	-	560	486	474	120	254	79	24
SDCD 3138/MC14	10 1/4	8 1/4	12	13/32	14 3/4	7.480	3 3/16	-	-	22 1/16	19 1/8	18 11/16	4 3/4	9 5/8	3 17/32	1
	260	210	305	10	375	190	80	-	-	560	486	474	120	244	89.5	24
SDCD 3238/MC14	11	9 1/16	12 25/32	15/32	16 3/16	8.268	3 3/8	-	-	24	20 5/16	19 13/16	5 1/8	9 5/8	3 27/32	1 1/4
	280	230	325	12	410	210	85	-	-	610	517	503	130	244	97.5	30

NOTE:

* Dimension "X" indicates the centreline of the bearing seat in the housing is offset this distance in relation to the centreline of the housing, away from the oil sump. When oil lubrication is used the static oil level H3 must be maintained.

** Dimension "S" indicates the shaft length from the bearing centre to the end of the shaft on the locknut side, which allows adequate clearance between the shaft end and the end cover. Normally the shaft need not be any longer than required for the adapter sleeve.

For an example on how to order please see page 183.

SDCD 3000, SDCD 3100, SDCD 3200, SDCD 3000/MC14, SDCD 3100/MC14, SDCD 3200/MC14

Pillow blocks of ductile iron for bearings with adapter sleeve and grease or oil lubrication

d_a 180 mm (6 15/16 - 7 3/16 in)

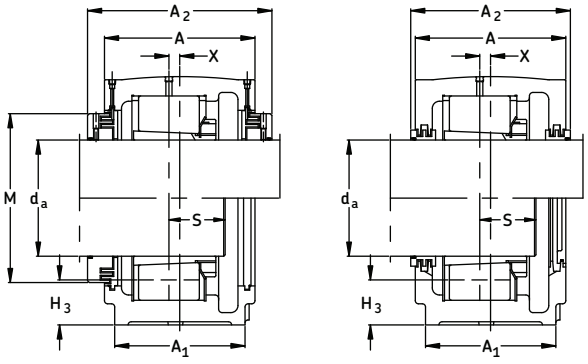

Shaft Dia.	Complete Pillow Block Assembly	Housing	Seal	Bearing	Adapter Sleeve	Fixing Rings (2 req'd)	Mass Complete		End Cover
mm/in							lb.	kg.	
6 15/16	SDCD 23038K/6 15/16	SDCD3038	TS38/6 15/16	23038CCK/W33	HA 3038	FRB 10/290	270	122	ETS38
	SDCD 23138K/6 15/16	SDCD3138	TS38/6 15/16	23138CCK/W33	HA 3138	FRB 10/320	340	154	ETS38
	SDCD 23238K/6 15/16	SDCD3238	TS40/6 15/16	23238CCK/W33	HA 2338	FRB 10/340	440	200	ETS40
	SDCD 23038KMC14/6 15/16D	SDCD3038/MC14	TSDC38/6 15/16D	23038CCK/W33	HA 3038	FRB 10/290	270	122	ASDC38
	SDCD 23138KMC14/6 15/16D	SDCD3138/MC14	TSDC38/6 15/16D	23138CCK/W33	HA 3138	FRB 10/320	340	154	ASDC38
	SDCD 23238KMC14/6 15/16D	SDCD3238/MC14	TSDC38/6 15/16D	23238CCK/W33	HA 2338	FRB 10/340	440	200	ASDC38
7	SDCD 23040K/7	SDCD3040	TS40/7	23040CCK/W33	HE 3040	FRB 10/310	340	154	ETS40
	SDCD 23140K/7	SDCD3140	TS40/7	23140CCK/W33	HE 3140	FRB 10/340	420	190	ETS40
	SDCD 23240K/7	SDCD3240	TS44/7	23240CCK/W33	HE 2340	FRB 10/360	520	236	ETS44
	SDCD 23040KMC14/7D	SDCD3040/MC14	TSDC40/7D	23040CCK/W33	HE 3040	FRB 10/310	340	154	ASDC40
	SDCD 23140KMC14/7D	SDCD3140/MC14	TSDC40/7D	23140CCK/W33	HE 3140	FRB 10/340	420	190	ASDC40
	SDCD 23240KMC14/7D	SDCD3240/MC14	TSDC40/7D	23240CCK/W33	HE 2340	FRB 10/360	520	236	ASDC40
180	SDCD 23040K/180	SDCD3040	TS40	23040CCK/W33	H 3040	FRB 10/310	340	154	ETS40
	SDCD 23140K/180	SDCD3140	TS40	23140CCK/W33	H 3140	FRB 10/340	420	190	ETS40
	SDCD 23240K/180	SDCD3240	TS44/180	23240CCK/W33	H 2340	FRB 10/360	520	236	ETS44
	SDCD 23040KMC14/180D	SDCD3040/MC14	TSDC40/180D	23040CCK/W33	H 3040	FRB 10/310	340	154	ASDC40
	SDCD 23140KMC14/180D	SDCD3140/MC14	TSDC40/180D	23140CCK/W33	H 3140	FRB 10/340	420	190	ASDC40
	SDCD 23240KMC14/180D	SDCD3240/MC14	TSDC40/180D	23240CCK/W33	H 2340	FRB 10/360	520	236	ASDC40
7 3/16	SDCD 23040K/7 3/16	SDCD3040	TS40/7 3/16	23040CCK/W33	HA 3040	FRB 10/310	340	154	ETS40
	SDCD 23140K/7 3/16	SDCD3140	TS40/7 3/16	23140CCK/W33	HA 3140	FRB 10/340	420	190	ETS40
	SDCD 23240K/7 3/16	SDCD3240	TS44/7 3/16	23240CCK/W33	HA 2340	FRB 10/360	520	236	ETS44
	SDCD 23040KMC14/7 3/16D	SDCD3040/MC14	TSDC40/7 3/16D	23040CCK/W33	HA 3040	FRB 10/310	340	154	ASDC40
	SDCD 23140KMC14/7 3/16D	SDCD3140/MC14	TSDC40/7 3/16D	23140CCK/W33	HA 3140	FRB 10/340	420	190	ASDC40
	SDCD 23240KMC14/7 3/16D	SDCD3240/MC14	TSDC40/7 3/16D	23240CCK/W33	HA 2340	FRB 10/360	520	236	ASDC40

Included with each triple ring seal (TS) is a length of neoprene of 4 mm dia. for mounting in the groove of the seal ring bore as added protection against oil leakage.

If oil lubrication is to be used, SKF can drill and tap the two bosses for an oil level gauge and oil drain holes, if so specified on your order. Advise the type and size of gauge you intend to use, gauges are not supplied by SKF.

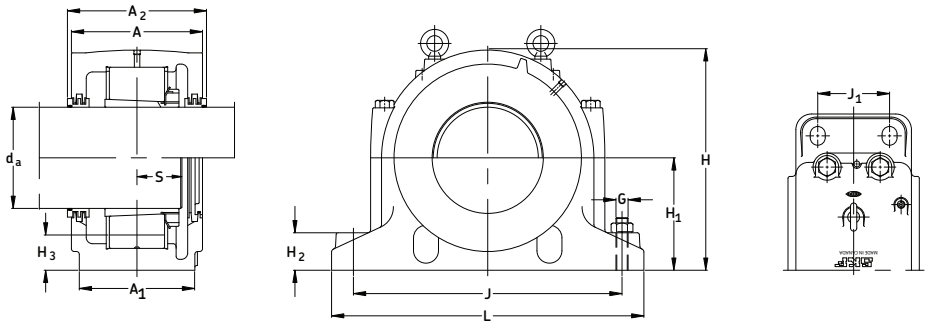

Housing No.	Dimensions							Static Oil Level								Bolts (4 req'd)
	A	A_1	A_2	X*	H	H_1	H_2	H_{3max}	H_{3min}	L	J_{max}	J_{min}	J_1	M	S**	G
	in/mm															
SDCD 3038	9 7/16	7 1/2	9 7/8	-	14	7.087	3	2 9/32	2 3/16	20 7/8	18	17 1/2	4 3/8	-	2 15/16	1
	240	190	250	-	355	180	75	58	55	530	456	444	110	-	74.5	24
SDCD 3138	10 1/4	8 1/4	10 5/8	13/32	14 3/4	7.480	3 3/16	2 13/32	2 1/4	22 1/16	19 1/8	18 11/16	4 3/4	-	3 17/32	1
	260	210	270	10	375	190	80	61	57	560	486	474	120	-	89.5	24
SDCD 3238	11	9 1/16	11 7/16	15/32	16 3/16	8.268	3 3/8	3	2 13/16	24	20 5/16	19 13/16	5 1/8	-	3 27/32	1 1/4
	280	230	290	12	410	210	85	76	71	610	517	503	130	-	97.5	30
SDCD 3038/MC14	9 7/16	7 1/2	11 3/16	-	14	7.087	3	-	-	22 1/16	19 1/8	18 5/8	4 3/4	10	3 1/8	1
	240	190	284	-	355	180	76	-	-	560	486	474	120	254	79	24
SDCD 3138/MC14	10 1/4	8 1/4	12	13/32	14 3/4	7.480	3 3/16	-	-	22 1/16	19 1/8	18 11/16	4 3/4	9 5/8	3 17/32	1
	260	210	305	10	375	190	80	-	-	560	486	474	120	244	89.5	24
SDCD 3238/MC14	11	9 1/16	12 25/32	15/32	16 3/16	8.268	3 3/8	-	-	24	20 5/16	19 13/16	5 1/8	9 5/8	3 27/32	1 1/4
	280	230	325	12	410	210	85	-	-	610	517	503	130	244	97.5	30
SDCD 3040	10 1/4	8 1/4	10 5/8	-	14 3/4	7.480	3 3/16	2 13/32	2 7/32	22 1/16	19 1/8	18 5/8	4 3/4	-	3 1/8	1
	260	210	270	-	375	190	80	61	56	560	486	474	120	-	79	24
SDCD 3140	11	9 1/16	11 7/16	13/32	16 3/16	8.268	3 3/8	2 29/32	2 11/16	24	20 5/16	19 13/16	5 1/8	-	3 23/32	1 1/4
	280	230	290	10	410	210	85	74	68	610	517	503	130	-	94.5	30
SDCD 3240	11 7/16	9 7/16	11 13/16	7/16	17 1/8	8.661	3 9/16	3 1/8	2 7/8	25 3/16	21 1/2	21	5 1/2	-	4 1/32	1 1/4
	290	240	300	11	435	220	90	79	73	640	547	533	140	-	102.5	30
SDCD 3040/MC14	10 1/4	8 1/4	12	-	14 3/4	7.480	3 3/16	-	-	22 1/16	19 1/8	18 5/8	4 3/4	10	3 1/8	1
	260	210	305	-	375	190	80	-	-	560	486	474	120	254	79	24
SDCD 3140/MC14	11	9 1/16	12 25/32	13/32	16 3/16	8.268	3 3/8	-	-	24	20 5/16	19 13/16	5 1/8	10	3 23/32	1 1/4
	280	230	325	10	410	210	85	-	-	610	517	503	130	254	94.5	30
SDCD 3240/MC14	11 7/16	9 7/16	13 3/16	7/16	17 1/8	8.661	3 9/16	-	-	25 3/16	21 1/2	21	5 1/2	10	4 1/32	1 1/4
	290	240	335	11	435	220	90	-	-	640	547	533	140	254	102.5	30

NOTE:

* Dimension "X" indicates the centreline of the bearing seat in the housing is offset this distance in relation to the centreline of the housing, away from the oil sump. When oil lubrication is used the static oil level H3 must be maintained.

** Dimension "S" indicates the shaft length from the bearing centre to the end of the shaft on the locknut side, which allows adequate clearance between the shaft end and the end cover. Normally the shaft need not be any longer than required for the adapter sleeve.

For an example on how to order please see page 183.

SDCD 3000, SDCD 3100, SDCD 3200, SDCD 3000/MC14, SDCD 3100/MC14, SDCD 3200/MC14

Pillow blocks of ductile iron for bearings with adapter sleeve and grease or oil lubrication

d_a 200 - 220 mm

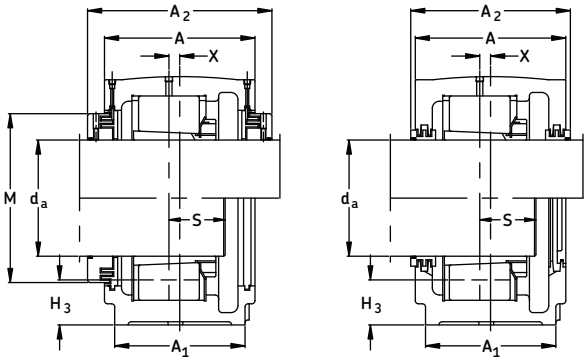

Shaft Dia.	Complete Pillow Block Assembly	Housing	Seal	Bearing	Adapter Sleeve	Fixing Rings (2 req'd)	Mass Complete		End Cover
mm							lb.	kg.	
200	SDCD 23044K/200	SDCD3044	TS44	23044CCK/W33	H 3044	FRB 10/340	420	190	ETS44
	SDCD 23144K/200	SDCD3144	TS44	23144CCK/W33	H 3144	FRB 10/370	495	224	ETS44
	SDCD 23244K/200	SDCD3244	TS48/200	23244CCK/W33	H 2344	FRB 10/400	680	309	ETS48
	SDCD 23044KMC14/200D	SDCD3044/MC14	TSDC44/200D	23044CCK/W33	H 3044	FRB 10/340	420	190	ASDC44
	SDCD 23144KMC14/200D	SDCD3144/MC14	TSDC44/200D	23144CCK/W33	H 3144	FRB 10/370	495	224	ASDC44
	SDCD 23244KMC14/200D	SDCD3244/MC14	TSDC44/200D	23244CCK/W33	H 2344	FRB 10/400	680	309	ASDC44
220	SDCD 23048K/220	SDCD3048	TS48	23048CCK/W33	H 3048	FRB 10/360	495	224	ETS48
	SDCD 23148K/220	SDCD3148	TS48	23148CCK/W33	H 3148	FRB 10/400	635	288	ETS48
	SDCD 23248K/220	SDCD3248	TS52/220	23248CCK/W33	H 2348	FRB 10/440	840	381	ETS52
	SDCD 23048KMC14/220D	SDCD3048/MC14	TSDC48/220D	23048CCK/W33	H 3048	FRB 10/360	495	224	ASDC48
	SDCD 23148KMC14/220D	SDCD3148/MC14	TSDC48/220D	23148CCK/W33	H 3148	FRB 10/400	635	288	ASDC48
	SDCD 23248KMC14/220D	SDCD3248/MC14	TSDC48/220D	23248CCK/W33	H 2348	FRB 10/440	840	381	ASDC48

Included with each triple ring seal (TS) is a length of neoprene of 4 mm dia. for mounting in the groove of the seal ring bore as added protection against oil leakage.

If oil lubrication is to be used, SKF can drill and tap the two bosses for an oil level gauge and oil drain holes, if so specified on your order. Advise the type and size of gauge you intend to use, gauges are not supplied by SKF.

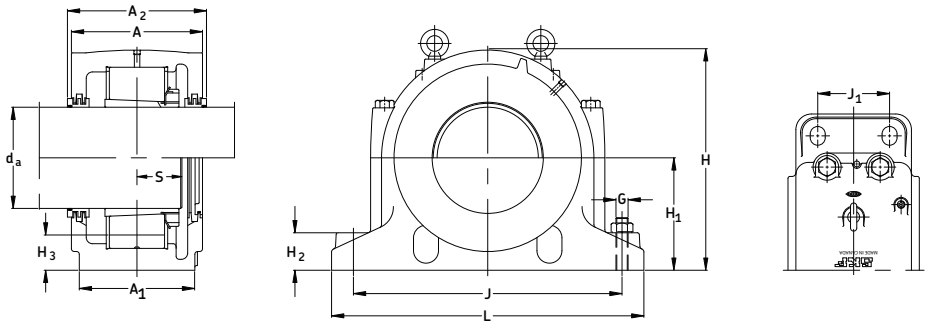

Housing No.	Dimensions							Static Oil Level								Bolts (4 req'd)
	A	A_1	A_2	X*	H	H_1	H_2	H_{3max}	H_{3min}	L	J_{max}	J_{min}	J_1	M	S**	G
	in/mm															
SDCD 3044	11	9 1/16	11 7/16	-	16 3/16	8.268	3 3/8	2 11/16	2 7/16	24	20 5/16	19 13/16	5 1/8	-	3 9/32	1 1/4
	280	230	290	-	410	210	85	68	62	610	517	503	130	-	83	30
SDCD 3144	11 7/16	9 7/16	11 13/16	15/32	17 1/8	8.661	3 9/16	2 13/16	2 9/16	25 3/16	21 1/2	21	5 1/2	-	4 1/16	1 1/4
	290	240	300	12	435	220	90	71	65	640	547	533	140	-	103	30
SDCD 3244	12 1/4	10 1/4	12 5/8	25/32	18 3/4	9.449	3 3/4	3 9/32	3 1/32	27 9/16	23 7/8	23 3/8	5 7/8	-	4 17/32	1 1/4
	310	260	320	20	475	240	95	83	77	700	607	593	150	-	115	30
SDCD 3044/MC14	11	9 1/16	12 25/32	-	16 3/16	8.268	3 3/8	-	-	24	20 5/16	19 13/16	5 1/8	11 3/8	3 9/32	1 1/4
	280	230	325	-	410	210	85	-	-	610	517	503	130	289	83	30
SDCD 3144/MC14	11 7/16	9 7/16	13 3/16	15/32	17 1/8	8.661	3 9/16	-	-	25 3/16	21 1/2	21	5 1/2	11 3/8	4 1/16	1 1/4
	290	240	335	12	435	220	90	-	-	640	547	533	140	289	103	30
SDCD 3244/MC14	12 1/4	10 1/4	13 31/32	25/32	18 3/4	9.449	3 3/4	-	-	27 9/16	23 7/8	23 3/8	5 7/8	11 3/8	4 17/32	1 1/4
	310	260	355	20	475	240	95	-	-	700	607	593	150	289	115	30
SDCD 3048	11 7/16	9 7/16	11 13/16	-	17 1/8	8.661	3 9/16	2 11/16	2 7/16	25 3/16	21 1/2	21	5 1/2	-	3 15/32	1 1/4
	290	240	300	-	435	220	90	68	62	640	547	533	140	-	88	30
SDCD 3148	12 1/4	10 1/4	12 5/8	15/32	18 3/4	9.449	3 3/4	3 1/16	2 13/16	27 9/16	23 7/8	23 3/8	5 7/8	-	4 9/32	1 1/4
	310	260	320	12	475	240	95	78	71	700	607	593	150	-	109	30
SDCD 3248	12 5/8	11 1/16	13	13/16	20 5/16	10.236	3 15/16	3 7/16	3 5/32	30 5/16	25 7/8	25 1/4	6 5/16	-	4 15/16	1 1/2
	320	280	330	21	515	260	100	87	80	770	658	642	160	-	125	36
SDCD 3048/MC14	11 7/16	9 7/16	13 3/16	-	17 1/8	8.661	3 9/16	-	-	25 3/16	21 1/2	21	5 1/2	12 1/16	3 15/32	1 1/4
	290	240	335	-	435	220	90	-	-	640	547	533	140	306	88	30
SDCD 3148/MC14	12 1/4	10 1/4	13 31/32	15/32	18 3/4	9.449	3 3/4	-	-	27 9/16	23 7/8	23 3/8	5 7/8	12 1/16	4 9/32	1 1/4
	310	260	355	12	475	240	95	-	-	700	607	593	150	306	109	30
SDCD 3248/MC14	12 5/8	11 1/16	14 3/8	13/16	20 5/16	10.236	3 15/16	-	-	30 5/16	25 7/8	25 1/4	6 5/16	12 1/16	4 15/16	1 1/2
	320	280	365	21	515	260	100	-	-	770	658	642	160	306	125	36

NOTE:

* Dimension "X" indicates the centreline of the bearing seat in the housing is offset this distance in relation to the centreline of the housing, away from the oil sump. When oil lubrication is used the static oil level H3 must be maintained.

** Dimension "S" indicates the shaft length from the bearing centre to the end of the shaft on the locknut side, which allows adequate clearance between the shaft end and the end cover. Normally the shaft need not be any longer than required for the adapter sleeve.

For an example on how to order please see page 183.

SDCD 3000 SDCD 3100, SDCD 3200, SDCD 3000/MC14, SDCD 3100/MC14, SDCD 3200/MC14

Pillow blocks of ductile iron for bearings with adapter sleeve and grease or oil lubrication

d_a 240 - 260 mm

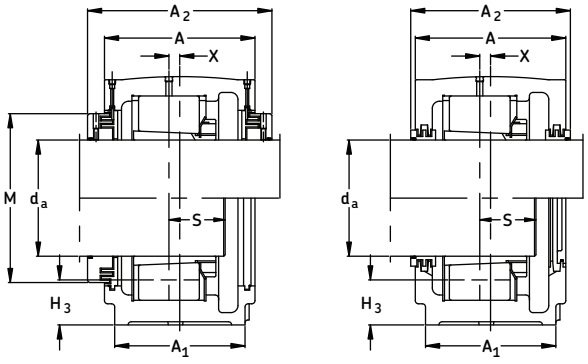

Shaft Dia.	Complete Pillow Block Assembly	Housing	Seal	Bearing	Adapter Sleeve	Fixing Rings (2 req'd)	Mass Complete		End Cover
mm							lb.	kg.	
240	SDCD 23052K/240	SDCD3052	TS52	23052CCK/W33	H 3052	FRB 10/400	635	288	ETS52
	SDCD 23152K/240	SDCD3152	TS52	23152CCK/W33	H 3152	FRB 10/440	790	358	ETS52
	SDCD 23252K/240	SDCD3252	TS60/240	23252CACK/W33	H 2352	FRB 10/480	1155	524	ETS60
	SDCD 23052KMC14/240D	SDCD3052/MC14	TSDC52/240D	23052CCK/W33	H 3052	FRB 10/400	635	288	ASDC52
	SDCD 23152KMC14/240D	SDCD3152/MC14	TSDC52/240D	23152CCK/W33	H 3152	FRB 10/440	790	358	ASDC52
	SDCD 23252KMC14/240D	SDCD3252/MC14	TSDC52/240D	23252CACK/W33	H 2352	FRB 10/480	1155	524	ASDC52
260	SDCD 23056K/260	SDCD3056	TS56	23056CCK/W33	H 3056	FRB 10/420	635	288	ETS56
	SDCD 23156K/260	SDCD3156	TS56	23156CCK/W33	H 3156	FRB 10/460	900	408	ETS56
	SDCD 23256K/260	SDCD3256	TS60/260	23256CACK/W33	H 2356	FRB 10/500	1190	540	ETS60
	SDCD 23056KMC14/260D	SDCD3056/MC14	TSDC56/260D	23056CCK/W33	H 3056	FRB 10/420	635	288	ASDC56
	SDCD 23156KMC14/260D	SDCD3156/MC14	TSDC56/260D	23156CCK/W33	H 3156	FRB 10/460	900	408	ASDC56
	SDCD 23256KMC14/260D	SDCD3256/MC14	TSDC56/260D	23256CACK/W33	H 2356	FRB 10/500	1190	540	ASDC56

Included with each triple ring seal (TS) is a length of neoprene of 4 mm dia. for mounting in the groove of the seal ring bore as added protection against oil leakage.

If oil lubrication is to be used, SKF can drill and tap the two bosses for an oil level gauge and oil drain holes, if so specified on your order. Advise the type and size of gauge you intend to use, gauges are not supplied by SKF.

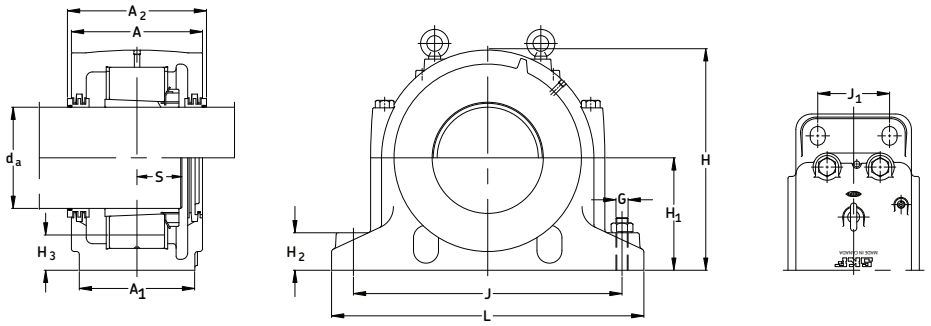

Housing No.	Dimensions							Static Oil Level								Bolts (4 req'd)
	A	A_1	A_2	X*	H	H_1	H_2	H_{3max}	H_{3min}	L	J_{max}	J_{min}	J_1	M	S**	G
	in/mm															
SDCD 3052	12 1/4	10 1/4	12 5/8	-	18 3/4	9.449	3 3/4	2 7/8	2 9/16	27 9/16	23 7/8	23 5/16	5 7/8	-	3 11/16	1 1/4
	310	260	320	-	475	240	95	73	65	700	607	593	150	-	94	30
SDCD 3152	12 5/8	11	13	1/2	20 5/16	10.236	3 15/16	3 1/4	3	30 5/16	25 7/8	25 1/4	6 5/16	-	4 7/8	1 1/2
	320	280	330	13	515	260	100	83	76	770	658	642	160	-	124	36
SDCD 3252	13 13/16	12 1/4	14 3/16	1 1/32	23 1/4	11.811	4 3/8	4 13/32	4 1/32	32 11/16	28 1/4	27 5/8	7 1/2	-	5 9/32	1 1/2
	350	310	360	26	590	300	110	112	102	830	718	702	190	-	134	36
SDCD 3052/MC14	12 1/4	10 1/4	13 31/32	-	18 3/4	9.449	3 3/4	-	-	27 9/16	23 7/8	23 5/16	5 7/8	12 7/8	3 11/16	1 1/4
	310	260	355	-	475	240	95	-	-	700	607	593	150	327	94	30
SDCD 3152/MC14	12 5/8	11	14 3/8	1/2	20 5/16	10.236	3 15/16	-	-	30 5/16	25 7/8	25 1/4	6 5/16	12 7/8	4 7/8	1 1/2
	320	280	365	13	515	260	100	-	-	770	658	642	160	327	124	36
SDCD 3252/MC14	13 13/16	12 1/4	15 17/32	1 1/32	23 1/4	11.811	4 3/8	-	-	32 11/16	28 1/4	27 5/8	7 1/2	12 7/8	5 9/32	1 1/2
	350	310	394	26	590	300	110	-	-	830	718	702	190	327	134	36
SDCD 3056	12 1/4	10 1/4	12 5/8	-	18 3/4	9.449	3 3/4	2 1/2	2 3/16	27 9/16	23 7/8	23 5/16	5 7/8	-	3 29/32	1 1/4
	310	260	320	-	475	240	95	63	55	700	607	593	150	-	99	30
SDCD 3156	12 5/8	11	13	5/8	21 5/8	11.024	4 1/8	3 5/8	3 3/8	31 1/8	26 11/16	26 1/16	6 5/16	-	5	1 1/2
	320	280	350	16	550	280	105	93	86	790	678	662	160	-	127	36
SDCD 3256	13 13/16	12 1/4	14 3/16	1 1/32	23 1/4	11.811	4 3/8	4	3 5/8	32 11/16	28 1/4	27 5/8	7 1/2	-	5 3/8	1 1/2
	350	310	360	26	590	300	110	101	92	830	718	702	190	-	136	36
SDCD 3056/MC14	12 1/4	10 1/4	13 31/32	-	18 3/4	9.449	3 3/4	-	-	27 9/16	23 7/8	23 5/16	5 7/8	13 5/8	3 29/32	1 1/4
	310	260	355	-	475	240	95	-	-	700	607	593	150	346	99	30
SDCD 3156/MC14	12 5/8	11	14 3/8	5/8	21 5/8	11.024	4 1/8	-	-	31 1/8	26 11/16	26 1/16	6 5/16	13 5/8	5	1 1/2
	320	280	365	16	550	280	105	-	-	790	678	662	160	346	127	36
SDCD 3256/MC14	13 13/16	12 1/4	15 17/32	1 1/32	23 1/4	11.811	4 3/8	-	-	32 11/16	28 1/4	27 5/8	7 1/2	13 5/8	5 3/8	1 1/2
	350	310	394	26	590	300	110	-	-	830	718	702	190	346	136	36

NOTE:

* Dimension "X" indicates the centreline of the bearing seat in the housing is offset this distance in relation to the centreline of the housing, away from the oil sump. When oil lubrication is used the static oil level H3 must be maintained.

** Dimension "S" indicates the shaft length from the bearing centre to the end of the shaft on the locknut side, which allows adequate clearance between the shaft end and the end cover. Normally the shaft need not be any longer than required for the adapter sleeve.

For an example on how to order please see page 183.

SDCD 3000, SDCD 3100, SDCD 3200, SDCD 3000/MC14, SDCD 3100/MC14, SDCD 3200/MC14

Pillow blocks of ductile iron for bearings with adapter sleeve and grease or oil lubrication

d_a 280 - 300 mm

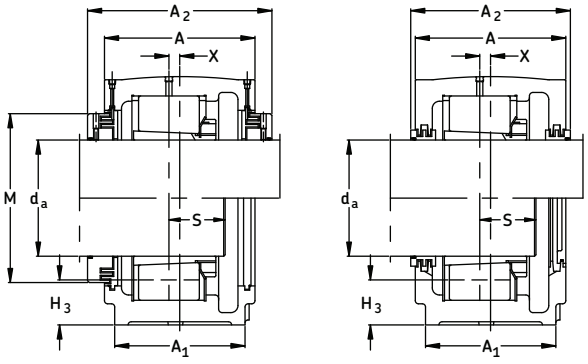

Shaft Dia.	Complete Pillow Block Assembly	Housing	Seal	Bearing	Adapter Sleeve	Fixing Rings (2 req'd)	Mass Complete		End Cover
mm							lb.	kg.	
280	SDCD 23060K/280	SDCD3060	TS60	23060CCK/W33	H 3060	FRB 10/460	900	408	ETS60
	SDCD 23160K/280	SDCD3160	TS60	23160CCK/W33	H 3160	FRB 10/500	1100	500	ETS60
	SDCD 23260K/280	SDCD3260	TS64/ 280	23260CACK/W33	H 3260	FRB 10/540	1365	620	ETS64
	SDCD 23060KMC14/280D	SDCD3060/MC14	TSDC60/280D	23060CCK/W33	H 3060	FRB 10/460	900	408	ASDC60
	SDCD 23160KMC14/280D	SDCD3160/MC14	TSDC60/280D	23160CCK/W33	H 3160	FRB 10/500	1100	500	ASDC60
	SDCD 23260KMC14/280D	SDCD3260/MC14	TSDC60/280D	23260CACK/W33	H 3260	FRB 10/540	1365	620	ASDC60
300	SDCD 23064K/300	SDCD3064	TS64	23064CCK/W33	H 3064	FRB 10/480	900	408	ETS64
	SDCD 23164K/300	SDCD3164	TS64	23164CCK/W33	H 3164	FRB 10/540	1295	587	ETS64
	SDCD 23264K/300	SDCD3264	TS64	23264CACK/W33	H 3264	FRB 10/580	1925	875	ETS64
	SDCD 23064KMC14/300D	SDCD3064/MC14	TSDC64/300D	23064CCK/W33	H 3064	FRB 10/480	900	408	ASDC64
	SDCD 23164KMC14/300D	SDCD3164/MC14	TSDC64/300D	23164CCK/W33	H 3164	FRB 10/540	1295	587	ASDC64
	SDCD 23264KMC14/300D	SDCD3264/MC14	TSDC64/300D	23264CACK/W33	H 3264	FRB 10/580	1925	875	ASDC64

Included with each triple ring seal (TS) is a length of neoprene of 4 mm dia. for mounting in the groove of the seal ring bore as added protection against oil leakage.

If oil lubrication is to be used, SKF can drill and tap the two bosses for an oil level gauge and oil drain holes, if so specified on your order. Advise the type and size of gauge you intend to use, gauges are not supplied by SKF.

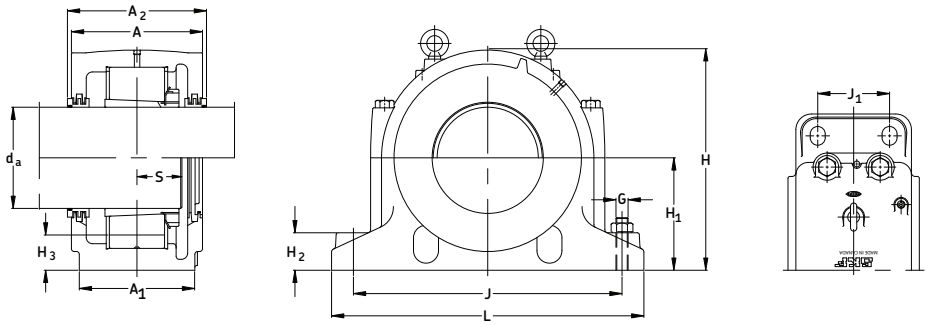

Housing No.	Dimensions							Static Oil Level								Bolts (4 req'd)
	A	A_1	A_2	X*	H	H_1	H_2	H_{3max}	H_{3min}	L	J_{max}	J_{min}	J_1	M	S**	G
	in/mm															
SDCD 3060	12 5/8	11 1/16	13	-	21 5/8	11.024	4 1/8	3 7/16	3 1/16	31 1/8	26 11/16	26 1/16	6 5/16	-	4 9/32	1 1/2
	320	280	330	-	550	280	105	87	78	790	678	662	160	-	109	36
SDCD 3160	13 3/4	12 1/4	14 3/16	7/8	23 1/4	11.811	4 3/8	3 13/16	3 1/2	32 11/16	28 1/4	27 5/8	7 1/2	-	5 1/16	1 1/2
	350	310	360	22	590	300	110	97	89	830	718	702	190	-	128	36
SDCD 3260	14 9/16	13	15	1 5/32	24 13/16	12.598	4 9/16	4 3/16	3 25/32	34 5/8	29 13/16	29 3/16	7 7/8	-	5 11/16	1 1/2
	370	330	380	29	630	320	115	106	96	880	758	742	200	-	144	36
SDCD 3060/MC14	12 5/8	11 1/16	14 3/8	-	21 5/8	11.024	4 1/8	-	-	31 1/8	26 11/16	26 1/16	6 5/16	14 7/16	4 9/32	1 1/2
	320	280	365	-	550	280	105	-	-	790	678	662	160	367	109	36
SDCD 3160/MC14	13 3/4	12 1/4	15 17/32	7/8	23 1/4	11.811	4 3/8	-	-	32 11/16	28 1/4	27 5/8	7 1/2	14 7/16	5 1/16	1 1/2
	350	310	394	22	590	300	110	-	-	830	718	702	190	367	128	36
SDCD 3260/MC14	14 9/16	13	16 5/16	1 5/32	24 13/16	12.598	4 9/16	-	-	34 5/8	29 13/16	29 3/16	7 7/8	14 7/16	5 11/16	1 1/2
	370	330	414	29	630	320	115	-	-	880	758	742	200	367	144	36
SDCD 3064	12 5/8	11 1/16	13	-	21 5/8	11.024	4 1/8	3 1/32	2 11/16	31 1/8	26 11/16	26 1/16	6 5/16	-	4 11/32	1 1/2
	320	280	330	-	550	280	105	77	68	790	678	662	160	-	110.5	36
SDCD 3164	14 9/16	13	15	29/32	24 13/16	12.598	4 1/2	4 1/16	3 5/8	34 5/8	29 13/16	29 1/4	7 7/8	-	5 7/16	1 1/2
	370	330	380	23	630	320	115	103	93	880	758	742	200	-	138	36
SDCD 3264	16 1/8	14 9/16	16 1/2	1 7/32	27 3/4	14.173	4 3/4	5 5/32	4 23/32	39 3/8	34 5/16	33 3/8	9 1/16	-	6 1/16	1 3/4
	410	370	420	31	705	360	120	131	120	1000	872	848	230	-	154	45
SDCD 3064/MC14	12 5/8	11 1/16	14 3/8	-	21 5/8	11.024	4 1/8	-	-	31 1/8	26 11/16	26 1/16	6 5/16	15 19/32	4 11/32	1 1/2
	320	280	365	-	550	280	105	-	-	790	678	662	160	396	110.5	36
SDCD 3164/MC14	14 9/16	13	16 5/16	29/32	24 13/16	12.598	4 1/2	-	-	34 5/8	29 13/16	29 1/4	7 7/8	15 19/32	5 7/16	1 1/2
	370	330	414	23	630	320	115	-	-	880	758	742	200	396	138	36
SDCD 3264/MC14	16 1/8	14 9/16	17 29/32	1 7/32	27 3/4	14.173	4 3/4	-	-	39 3/8	34 5/16	33 3/8	9 1/16	15 19/32	6 1/16	1 3/4
	410	370	455	31	705	360	120	-	-	1000	872	848	230	396	154	45

NOTE:

* Dimension "X" indicates the centreline of the bearing seat in the housing is offset this distance in relation to the centreline of the housing, away from the oil sump. When oil lubrication is used the static oil level H3 must be maintained.

** Dimension "S" indicates the shaft length from the bearing centre to the end of the shaft on the locknut side, which allows adequate clearance between the shaft end and the end cover. Normally the shaft need not be any longer than required for the adapter sleeve.

For an example on how to order please see page 183.

SDCD 3000, SDCD 3100, SDCD 3200, SDCD 3000/MC14, SDCD 3100/MC14, SDCD 3200/MC14

Pillow blocks of ductile iron for bearings with adapter sleeve and grease or oil lubrication

d_a 320 - 340 mm

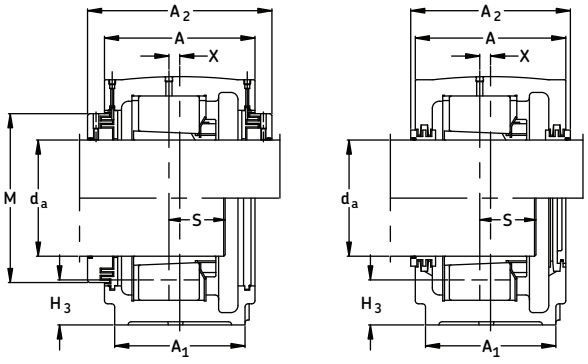

Shaft Dia.	Complete Pillow Block Assembly	Housing	Seal	Bearing	Adapter Sleeve	Fixing Rings (2 req'd)	Mass Complete		End Cover
mm							lb.	kg.	
320	SDCD 23068K/320	SDCD3068	TS68	23068CCK/W33	H 3068	FRB 10/520	1100	500	ETS68
	SDCD 23168K/320	SDCD3168	TS68	23168CCK/W33	H 3168	FRB 10/580	1850	839	ETS68
	SDCD 23268K/320	SDCD3268	TS68	23268CACK/W33	H 3268	FRB 10/620	2465	1119	ETS68
	SDCD 23068KMC14/320D	SDCD3068/MC14	TSDC68/320D	23068CCK/W33	H 3068	FRB 10/520	1100	500	ASDC68
	SDCD 23168KMC14/320D	SDCD3168/MC14	TSDC68/320D	23168CCK/W33	H 3168	FRB 10/580	1850	839	ASDC68
	SDCD 23268KMC14/320D	SDCD3268/MC14	TSDC68/320D	23268CACK/W33	H 3268	FRB 10/620	2465	1119	ASDC68
340	SDCD 23072K/340	SDCD3072	TS72	23072CCK/W33	H 3072	FRB 10/540	1295	587	ETS72
	SDCD 23172K/340	SDCD3172	TS72	23172CACK/W33	H 3172	FRB 10/600	1890	857	ETS72
	SDCD 23272K/340	SDCD3272	TS72	23272CAK/W33	H 3272	FRB 10/650	2550	1158	ETS72
	SDCD 23072KMC14/340D	SDCD3072/MC14	TSDC72/340D	23072CCK/W33	H 3072	FRB 10/540	1295	587	ASDC72
	SDCD 23172KMC14/340D	SDCD3172/MC14	TSDC72/340D	23172CACK/W33	H 3172	FRB 10/600	1890	857	ASDC72
	SDCD 23272KMC14/340D	SDCD3272/MC14	TSDC72/340D	23272CAK/W33	H 3272	FRB 10/650	2550	1158	ASDC72

Included with each triple ring seal (TS) is a length of neoprene of 4 mm dia. for mounting in the groove of the seal ring bore as added protection against oil leakage.

If oil lubrication is to be used, SKF can drill and tap the two bosses for an oil level gauge and oil drain holes, if so specified on your order. Advise the type and size of gauge you intend to use, gauges are not supplied by SKF.

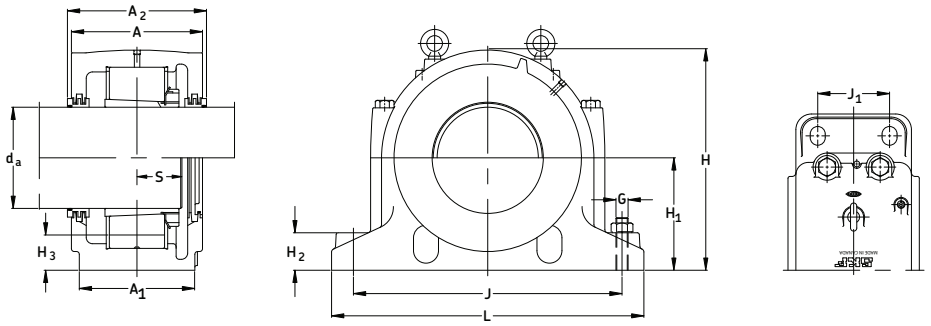

Housing No.	Dimensions							Static Oil Level								Bolts (4 req'd)
	A	A_1	A_2	X*	H	H_1	H_2	H_{3max}	H_{3min}	L	J_{max}	J_{min}	J_1	M	S**	G
	in/mm															
SDCD 3068	13 13/16	12 1/4	14 3/16	-	23 1/4	11.811	4 3/8	3 1/4	2 13/16	32 11/16	28 1/4	27 5/8	7 1/2	-	4 23/32	1 1/2
	350	310	360	-	590	300	110	82	71	830	718	702	190	-	119.5	36
SDCD 3168	16 1/8	14 9/16	16 1/2	1 7/32	27 3/4	14.173	4 3/4	5 1/32	4 9/16	39 3/8	34 5/16	33 3/8	9 1/16	-	6 7/32	1 3/4
	410	370	420	31	705	360	120	128	116	1000	872	848	230	-	158	45
SDCD 3268	17 1/8	15 1/2	17 1/2	1 7/32	30 1/8	15.354	5	5 23/32	5 7/32	44	38 1/2	37 1/2	9 1/4	-	6 7/8	2
	435	394	445	31	765	390	127	145	132	1118	977	953	235	-	175	50
SDCD 3068/MC14	13 13/16	12 1/4	15 17/32	-	23 1/4	11.811	4 3/8	-	-	32 11/16	28 1/4	27 5/8	7 1/2	16 13/32	4 23/32	1 1/2
	350	310	394	-	590	300	110	-	-	830	718	702	190	417	119.5	36
SDCD 3168/MC14	16 1/8	14 9/16	17 29/32	1 7/32	27 3/4	14.173	4 3/4	-	-	39 3/8	34 5/16	33 3/8	9 1/16	16 13/32	6 7/32	1 3/4
	410	370	455	31	705	360	120	-	-	1000	872	848	230	417	158	45
SDCD 3268/MC14	17 1/8	15 1/2	18 7/8	1 7/32	30 1/8	15.354	5	-	-	44	38 1/2	37 1/2	9 1/4	16 13/32	6 7/8	2
	435	394	479	31	765	390	127	-	-	1118	977	953	235	417	175	50
SDCD 3072	14 9/16	13	15	-	24 13/16	12.598	4 1/2	3 23/32	3 11/32	34 11/16	29 13/16	29 1/4	7 7/8	-	4 23/32	1 1/2
	370	330	380	-	630	320	115	94	85	880	758	742	200	-	120	36
SDCD 3172	16 1/8	14 9/16	16 1/2	1 7/32	27 3/4	14.173	4 3/4	4 9/16	4 1/8	39 3/8	34 3/8	33 3/8	9 1/16	-	6 15/32	1 3/4
	410	370	420	31	705	360	120	116	104	1000	872	848	230	-	164	45
SDCD 3272	17 1/8	15 1/2	17 1/2	1 7/32	30 1/8	15.354	5	5 9/32	4 23/32	44	38 1/2	37 1/2	9 1/4	-	7 3/16	2
	435	394	445	31	765	390	127	134	120	1118	977	953	235	-	182	50
SDCD 3072/MC14	14 9/16	13	16 5/16	-	24 13/16	12.598	4 1/2	-	-	34 11/16	29 13/16	29 1/4	7 7/8	17 5/32	4 23/32	1 1/2
	370	330	389	-	630	320	115	-	-	880	758	742	200	436	120	36
SDCD 3172/MC14	16 1/8	14 9/16	17 29/32	1 7/32	27 3/4	14.173	4 3/4	-	-	39 3/8	34 3/8	33 3/8	9 1/16	17 5/32	6 15/32	1 3/4
	410	370	455	31	705	360	120	-	-	1000	872	848	230	436	164	45
SDCD 3272/MC14	17 1/8	15 1/2	18 7/8	1 7/32	30 1/8	15.354	5	-	-	44	38 1/2	37 1/2	9 1/4	17 5/32	7 3/16	2
	435	394	479	31	765	390	127	-	-	1118	977	953	235	436	182	50

NOTE:

* Dimension "X" indicates the centreline of the bearing seat in the housing is offset this distance in relation to the centreline of the housing, away from the oil sump. When oil lubrication is used the static oil level H3 must be maintained.

** Dimension "S" indicates the shaft length from the bearing centre to the end of the shaft on the locknut side, which allows adequate clearance between the shaft end and the end cover. Normally the shaft need not be any longer than required for the adapter sleeve.

For an example on how to order please see page 183.

SDCD 3000, SDCD 3100, SDCD 3200, SDCD 3000/MC14, SDCD 3100/MC14, SDCD 3200/MC14

Pillow blocks of ductile iron for bearings with adapter sleeve and grease or oil lubrication

d_a 360 - 380 mm

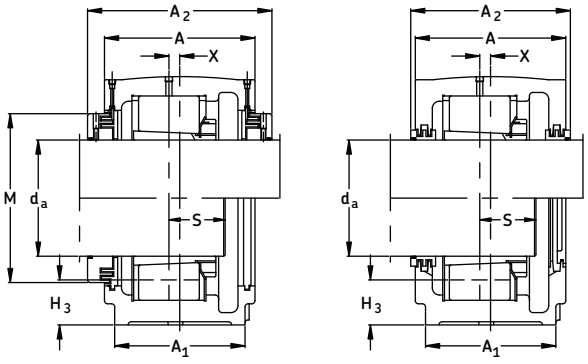

Shaft Dia.	Complete Pillow Block Assembly	Housing	Seal	Bearing	Adapter Sleeve	Fixing Rings (2 req'd)	Mass Complete		End Cover
mm							lb.	kg.	
360	SDCD 23076K/360	SDCD3076	TS76	23076CCK/W33	H 3076	FRB 10/560	1295	587	ETS76
	SDCD 23176K/360	SDCD3176	TS76	23176CAK/W33	H 3176	FRB 10/620	2300	1043	ETS76
	SDCD 23276K/360	SDCD3276	TS76	23276CAK/W33	H 3276	FRB 10/680	3080	1398	ETS76
	SDCD 23076KMC14/360D	SDCD3076/MC14	TSDC76/360D	23076CCK/W33	H 3076	FRB 10/560	1295	587	ASDC76
	SDCD 23176KMC14/360D	SDCD3176/MC14	TSDC76/360D	23176 CAK/W33	H 3176	FRB 10/620	2300	1043	ASDC76
	SDCD 23276KMC14/360D	SDCD3276/MC14	TSDC76/360D	23276 CAK/W33	H 3276	FRB 10/680	3080	1398	ASDC76
380	SDCD 23080K/380	SDCD3080	TS80	23080CACK/W33	H 3080	FRB 10/600	1890	857	ETS80
	SDCD 23180K/380	SDCD3180	TS80	23180CAK/W33	H 3180	FRB 10/650	2390	1084	ETS80
	SDCD 23280K/380	SDCD3280	TS80	23280CAK/W33	H 3280	FRB 10/720	3300	1498	ETS80
	SDCD 23080KMC14/380D	SDCD3080/MC14	TSDC80/380D	23080CACK/W33	H 3080	FRB 10/600	1890	857	ASDC80
	SDCD 23180KMC14/380D	SDCD3180/MC14	TSDC80/380D	23180CAK/W33	H 3180	FRB 10/650	2390	1084	ASDC80
	SDCD 23280KMC14/380D	SDCD3280/MC14	TSDC80/380D	23280CAK/W33	H 3280	FRB 10/720	3300	1498	ASDC80

Included with each triple ring seal (TS) is a length of neoprene of 4 mm dia. for mounting in the groove of the seal ring bore as added protection against oil leakage.

If oil lubrication is to be used, SKF can drill and tap the two bosses for an oil level gauge and oil drain holes, if so specified on your order. Advise the type and size of gauge you intend to use, gauges are not supplied by SKF.

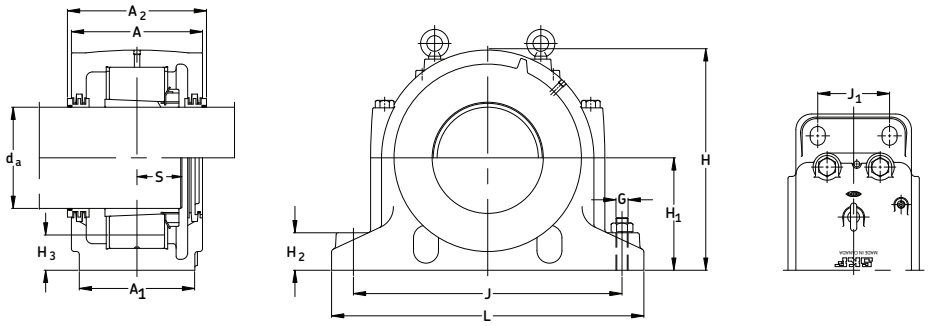

Housing No.	Dimensions							Static Oil Level								Bolts (4 req'd)
	A	A_1	A_2	X*	H	H_1	H_2	H_{3max}	H_{3min}	L	J_{max}	J_{min}	J_1	M	S**	G
	in/mm															
SDCD 3076	14 9/16	13	15	-	24 13/16	12.598	4 1/2	3 1/4	2 27/32	34 11/16	29 13/16	29 1/4	7 7/8	-	4 7/8	1 1/2
	370	330	380	-	630	320	115	83	72	880	758	742	200	-	123.5	36
SDCD 3176	17 1/8	15 1/2	17 1/2	1 7/32	30 1/8	15.354	5	5 7/16	5	44	38 1/2	37 1/2	9 1/4	-	6 1/2	2
	435	394	445	31	765	390	127	138	127	1118	978	953	235	-	165	50
SDCD 3276	18 1/8	16 1/2	18 1/2	1 7/32	33 1/8	16.737	5	6 1/8	5 9/16	47 1/4	41 3/16	40 1/4	9 7/8	-	7 13/32	2
	460	419	470	31	841	425	127	155	141	1200	1047	1022	251	-	188	50
SDCD 3076/MC14	14 9/16	13	16 5/16	-	24 13/16	12.598	4 1/2	-	-	34 11/16	29 13/16	29 1/4	7 7/8	17 29/32	4 7/8	1 1/2
	370	330	389	-	630	320	115	-	-	880	758	742	200	455	123.5	36
SDCD 3176/MC14	17 1/8	15 1/2	18 7/8	1 7/32	30 1/8	15.354	5	-	-	44	38 1/2	37 1/2	9 1/4	17 29/32	6 1/2	2
	435	394	479	31	765	390	127	-	-	1118	978	953	235	455	165	50
SDCD 3276/MC14	18 1/8	16 1/2	19 7/8	1 7/32	33 1/8	16.737	5	-	-	47 1/4	41 3/16	40 1/4	9 7/8	17 29/32	7 13/32	2
	460	419	505	31	841	425	127	-	-	1200	1047	1022	251	455	188	50
SDCD 3080	16 1/8	14 9/16	16 1/2	-	27 3/4	14.173	4 3/4	4 3/16	3 3/4	39 3/8	34 5/16	33 3/8	9 1/16	-	5 9/32	1 3/4
	410	370	420	-	705	360	120	106	94	1000	872	848	230	-	134	45
SDCD 3180	17 1/8	15 1/2	17 1/2	1 7/32	30 1/8	15.354	5	4 31/32	4 1/2	44	38 1/2	37 1/2	9 1/4	-	6 11/16	2
	435	394	445	31	765	390	127	126	113	1118	978	953	235	-	170	50
SDCD 3280	18 1/8	16 1/2	18 1/2	1 7/32	33 1/8	16.732	5	5 1/2	4 7/8	47 1/4	41 3/16	40 1/4	9 7/8	-	7 13/16	2
	460	419	470	31	841	425	127	140	124	1200	1047	1022	251	-	198	50
SDCD 3080/MC14	16 1/8	14 9/16	17 29/32	-	27 3/4	14.173	4 3/4	-	-	39 3/8	34 5/16	33 3/8	9 1/16	18 21/32	5 9/32	1 3/4
	410	370	455	-	705	360	120	-	-	1000	872	848	230	474	134	45
SDCD 3180/MC14	17 1/8	15 1/2	18 7/8	1 7/32	30 1/8	15.354	5	-	-	44	38 1/2	37 1/2	9 1/4	18 21/32	6 11/16	2
	435	394	479	31	765	390	127	-	-	1118	978	953	235	474	170	50
SDCD 3280/MC14	18 1/8	16 1/2	19 7/8	1 7/32	33 1/8	16.732	5	-	-	47 1/4	41 3/16	40 1/4	9 7/8	18 21/32	7 13/16	2
	460	419	505	31	841	425	127	-	-	1200	1047	1022	251	474	198	50

NOTE:

* Dimension "X" indicates the centreline of the bearing seat in the housing is offset this distance in relation to the centreline of the housing, away from the oil sump. When oil lubrication is used the static oil level H3 must be maintained.

** Dimension "S" indicates the shaft length from the bearing centre to the end of the shaft on the locknut side, which allows adequate clearance between the shaft end and the end cover. Normally the shaft need not be any longer than required for the adapter sleeve.

For an example on how to order please see page 183.

SDCD 3000, SDCD 3100, SDCD 3200, SDCD 3000/MC14, SDCD 3100/MC14, SDCD 3200/MC14

Pillow blocks of ductile iron for bearings with adapter sleeve and grease or oil lubrication

d_a 400 - 410 mm

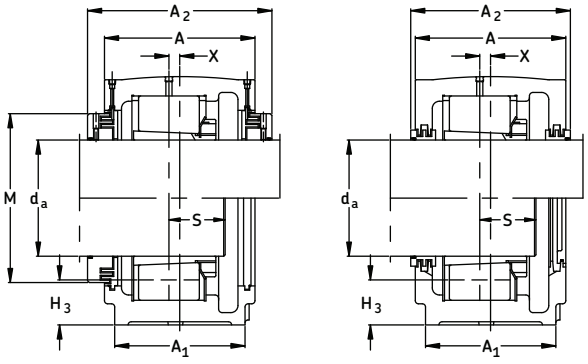

Shaft Dia.	Complete Pillow Block Assembly	Housing	Seal	Bearing	Adapter Sleeve	Fixing Rings (2 req'd)	Mass Complete		End Cover
mm							lb.	kg.	
400	SDCD 23084K/400	SDCD3084	TS84	23084CAK/W33	H 3084	FRB 10/620	2300	1043	ETS84
	SDCD 23184K/400	SDCD3184	TS84	23184CK/W33	H 3184	FRB 10/700	3050	1383	ETS84
	SDCD 23084KMC14/400D	SDCD3084/MC14	TSDC84/400D	23084CAK/W33	H 3084	FRB 10/620	2300	1043	ASDC84
	SDCD 23184KMC14/400D	SDCD3184/MC14	TSDC84/400D	23184CKJ/W33	H 3184	FRB 10/700	3050	1383	ASDC84
410	SDCD 23088K/410	SDCD3088	TS88	23088CAK/W33	H 3088	FRB 10/650	2300	1043	ETS88
	SDCD 23188K/410	SDCD3188	TS88	23188CAK/W33	H 3188	FRB 10/720	3150	1428	ETS88
	SDCD 23088KMC14/410D	SDCD3088/MC14	TSDC88/410D	23088CAK/W33	H 3088	FRB 10/650	2300	1043	ASDC88
	SDCD 23188KMC14/410D	SDCD3188/MC14	TSDC88/410D	23188CAK/W33	H 3188	FRB 10/720	3150	1428	ASDC88

Included with each triple ring seal (TS) is a length of neoprene of 4 mm dia. for mounting in the groove of the seal ring bore as added protection against oil leakage.

If oil lubrication is to be used, SKF can drill and tap the two bosses for an oil level gauge and oil drain holes, if so specified on your order. Advise the type and size of gauge you intend to use, gauges are not supplied by SKF.

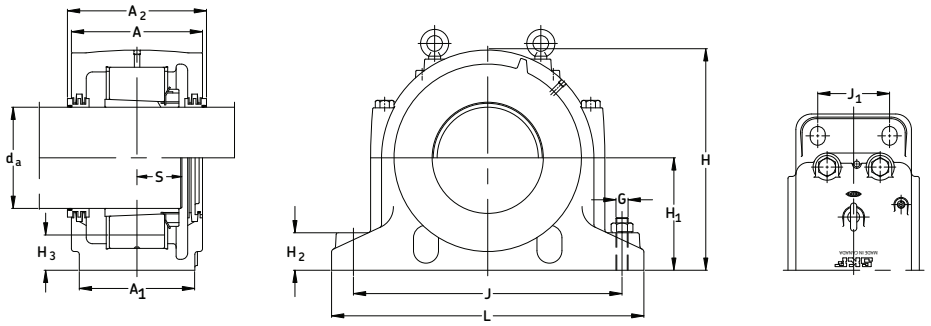

Housing No.	Dimensions							Static Oil Level								Bolts (4 req'd)
	A	A_1	A_2	X*	H	H_1	H_2	H_{3max}	H_{3min}	L	J_{max}	J_{min}	J_1	M	S**	G
	in/mm															
SDCD 3084	17 1/8	15 1/2	17 1/2	-	30 1/8	15.354	5	5	4 9/16	44	38 1/2	37 1/2	9 1/4	-	5 5/16	2
	435	394	445	-	765	390	127	127	115	1118	978	952	235	-	135	50
SDCD 3184	18 1/8	16 1/2	18 1/2	1 7/32	33 1/8	16.732	5	5 5/8	5 1/32	47 1/4	41 3/16	40 5/16	9 7/8	-	7 1/2	2
	460	419	470	31	841	425	127	143	128	1200	1046	1024	251	-	190	50
SDCD 3084/MC14	17 1/8	15 1/2	18 7/8	-	30 1/8	15.354	5	-	-	44	38 1/2	37 1/2	9 1/4	19 1/2	5 5/16	2
	435	394	479	-	765	390	127	-	-	1118	978	952	235	495	135	50
SDCD 3184/MC14	18 1/8	16 1/2	19 7/8	1 7/32	33 1/8	16.737	5	-	-	47 1/4	41 3/16	40 5/16	9 7/8	19 1/2	7 1/2	2
	460	419	505	31	841	425	127	-	-	1200	1046	1024	251	495	190	50
SDCD 3088	17 1/8	15 1/2	17 1/2	-	30 1/8	15.354	5	4 1/2	4	44	38 1/2	37 1/2	9 1/4	-	6 3/16	2
	435	394	445	-	765	390	127	114	102	1118	978	952	235	-	157	50
SDCD 3188	18 1/8	16 1/2	18 1/2	1 7/32	33 1/8	16.732	5	5 1/8	4 9/16	47 1/4	41 3/16	40 5/16	9 7/8	-	7 17/32	2
	460	419	470	31	841	425	127	130	115	1200	1046	1024	251	-	191	50
SDCD 3088/MC14	17 1/8	15 1/2	18 7/8	-	30 1/8	15.354	5	-	-	44	38 1/2	37 1/2	9 1/4	20 13/32	6 3/16	2
	435	394	479	-	765	390	127	-	-	1118	978	952	235	518	157	50
SDCD 3188/MC14	18 1/8	16 1/2	19 7/8	1 7/32	33 1/8	16.732	5	-	-	47 1/4	41 3/16	40 5/16	9 7/8	20 13/32	7 17/32	2
	460	419	505	31	841	425	127	-	-	1200	1046	1024	251	518	191	50

NOTE:

* Dimension "X" indicates the centreline of the bearing seat in the housing is offset this distance in relation to the centreline of the housing, away from the oil sump. When oil lubrication is used the static oil level H3 must be maintained.

** Dimension "S" indicates the shaft length from the bearing centre to the end of the shaft on the locknut side, which allows adequate clearance between the shaft end and the end cover. Normally the shaft need not be any longer than required for the adapter sleeve.

For an example on how to order please see page 183.

Pillow Block Housings

SDCD, SDCD/MC14

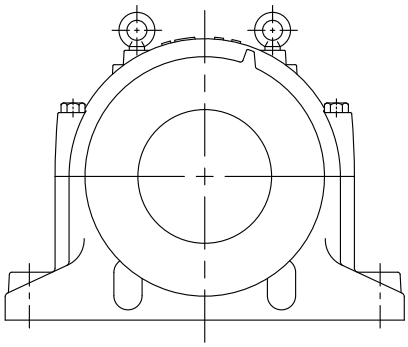

MATERIAL	Ductile Iron ASTM A536 grade 65-45-12	
BEARING SERIES USED	230CC, 231CC, 232CC	
SHAFT SIZE RANGE	6-7/8" to 19"	174.63mm to 482.60mm
PILLOW BLOCK SIZE	036 - 088 (cylindrical bore mounting) 134 - 188 (cylindrical bore mounting) 234 - 280 (cylindrical bore mounting)	
PILLOW BLOCK LUBRICATION	Grease or Oil	
STANDARD SEALS	TS 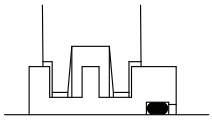	
OPTIONAL SEALS	TSDC-D 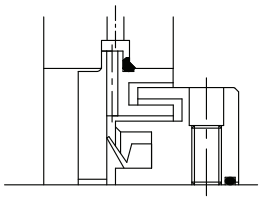	TSDC-E 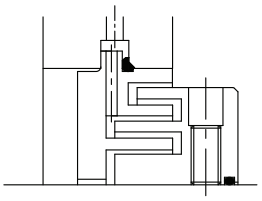

Note : Pillow Block SDCD must be modified to MC14 when using TSDC-D & E type seals.

Cylindrical Bore Mounting

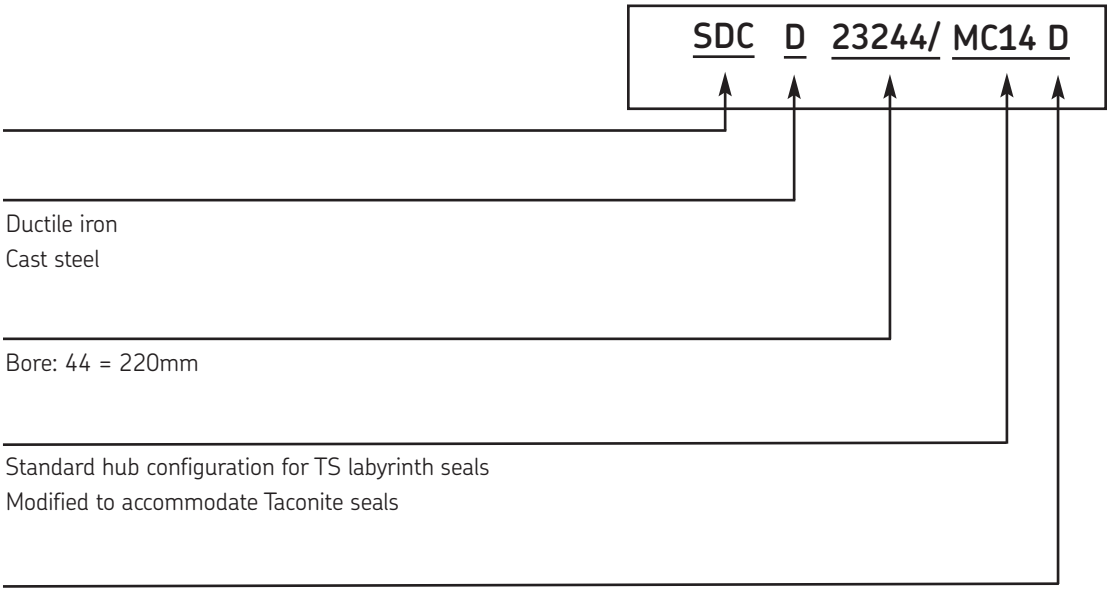

Basic design

Material

D Ductile iron

T Cast steel

Bearing bore

Bore: 44 = 220mm

Hub

~~0~~ Standard hub configuration for TS labyrinth seals

MC14 Modified to accommodate Taconite seals

Suffixes

D Taconite service seal TSDC design c/w V ring

E Taconite service seal TSDC design no V ring

H Held unit, complete with fixing rings

Y One end closed

How to order: (Example)

When you order one SDCD 23244/MC14 D you will receive a package containing the following:

1 - Pillow block housing SDCD 244/MC14, cap drilled, tapped and plugged with three holes (1) ¼" NPT
at the centre (2) ⅛" NPT for seals (D or E)
2 - Labyrinth seals for shaft diameters
d_a TSDC 52/9 $^{9}/_{16}$ D and
d_b TSDC 44/8 $^{5}/_{16}$ D
1 - Bearing SKF 23244CC/W33
1 - Locknut N044
1 - Lockwasher W044

If a "HELD or FIXED" unit is required, add the suffix “H” and two fixing rings (locating or stabalizing) will be included.
Not more than one bearing on each shaft should be "HELD".
If you require one end closed add "Y" to complete assembly number i.e. SDCD 23244/MC14D Y
and you will receive one Taconite seal shaft diameter da TSDC 52/9 $^{9}/_{16}$ and one end plug ASDC 48.

Series SDCD 000, SDCD 100, SDCD 200, SDCD 000/MC14, SDCD 100/MC14, SDCD 200/MC14

Pillow blocks of ductile iron for bearings with cylindrical bore mounting and grease or oil lubrication

d_a 7 7/16 - 7 13/16 in
d_b 6 7/16 - 6 7/8 in

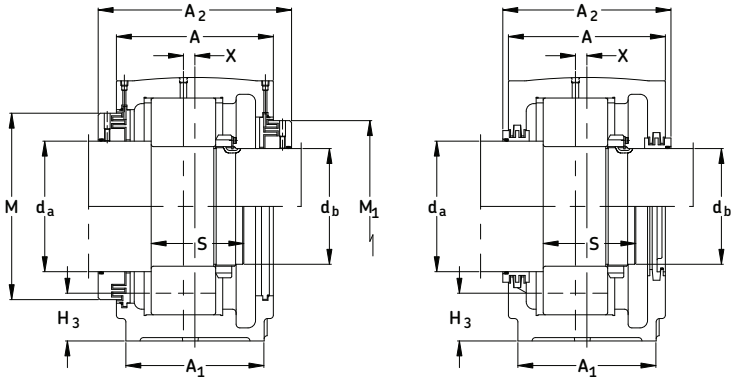

Shaft Dia. d_a/d_b	Complete Pillow Block Assembly	Housing	Seal Assemblies For Shaft Dia d_a	Seal Assemblies For Shaft Dia d_b	Bearing	Lock Nut	Lock Washer	End Cover	Fixing Ring (2 req'd)	Mass Comp
in										kg
d_a 7 7/16										
d_b 6 7/16										
	SDCD 23134	SDCD134	TS40/7 7/16	TS34/6 7/16	23134CC/W33	N 034	W 034	ETS34	FRB 10/280	95
	SDCD 23234	SDCD234	TS40/7 7/16	TS38/6 7/16	23234CC/W33	AN 34	W 34	ETS38	FRB 10/310	145
	SDCD 23134/MC14D	SDCD134/MC14	TSDC38/7 7/16D	TSDC34/6 7/16D	23134CC/W33	N 034	W 034	ASDC34	FRB 10/280	95
	SDCD 23234/MC14D	SDCD234/MC14	TSDC38/7 7/16D	TSDC34/6 7/16D	23234CC/W33	N 034	W 034	ASDC34	FRB 10/310	145
d_a 7 13/16										
d_b 6 7/8										
	SDCD 23036	SDCD036	TS44/7 13/16	TS36/6 7/8	23036CC/W33	N 036	W 036	ETS36	FRB 10/280	95
	SDCD 23136	SDCD136	TS44/7 13/16	TS36/6 7/8	23136CC/W33	N 036	W 036	ETS36	FRB 10/300	113
	SDCD 23236	SDCD236	TS44/7 13/16	TS38/6 7/8	23236CC/W33	AN 36	W 36	ETS38	FRB 10/320	150
	SDCD 23036/MC14D	SDCD036/MC14	TSDC40/7 13/16D	TSDC36/6 7/8D	23036CC/W33	N 036	W 036	ASDC36	FRB 10/280	95
	SDCD 23136/MC14D	SDCD136/MC14	TSDC40/7 13/16D	TSDC36/6 7/8D	23136CC/W33	N 036	W 036	ASDC36	FRB 10/300	113
	SDCD 23236/MC14D	SDCD236/MC14	TSDC40/7 13/16D	TSDC36/6 7/8D	23236CC/W33	N 036	W 036	ASDC36	FRB 10/320	150

If oil lubrication is to be used, SKF can drill and tap the two bosses for the oil level gauge and oil drain holes, if so specified on your order. Advise the type and size of the gauge you intend to use, gauges are not supplied by SKF.

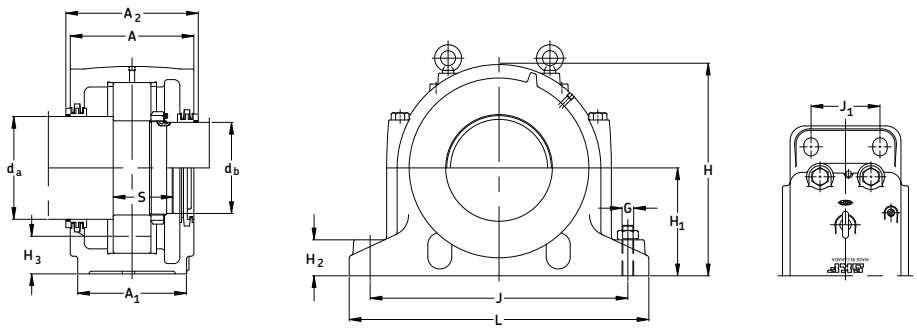

Housing No.	Dimensions							Static Oil Level									Bolts (4 req'd)
	A	A_1	A_2	X*	H	H_1	H_2	H_{3max}	H_{3min}	L	J_{max}	J_{min}	J_1	M	M_1	S**	G
	in/mm																
SDCD 134	9 1/16	7 1/8	9 7/16	9/16	13 3/16	6.693	2 3/4	2 1/4	2 3/32	20 1/16	17 1/8	16 11/16	3 15/16	-	-	5 1/16	1
	230	180	240	14	335	170	70	57	53	510	436	424	100	-	-	128	24
SDCD 234	10 1/4	8 1/4	10 5/8	13/32	14 3/4	7.480	3 3/16	2 23/32	2 1/2	22 1/16	19 1/8	18 5/8	4 3/4	-	-	5 7/8	1
	260	210	270	10	375	190	80	69	64	560	486	474	120	-	-	149	24
SDCD 134/MC14	9 1/16	7 1/8	10 13/16	9/16	13 3/16	6.693	2 3/4	-	-	20 1/16	17 1/8	16 11/16	3 15/16	9 5/8	8 5/8	5 1/16	1
	230	180	275	14	335	170	70	-	-	510	436	424	100	244	219	128	24
SDCD 234/MC14	10 1/4	8 1/4	12	13/32	14 3/4	7.480	3 3/16	-	-	22 1/16	19 1/8	18 5/8	4 3/4	9 5/8	8 5/8	5 7/8	1
	260	210	305	10	375	190	80	-	-	560	486	474	120	244	219	149	24
SDCD 036	9 1/16	7 1/8	9 7/16	-	13 3/16	6.693	2 3/4	2 1/8	2	20 1/16	17 3/16	16 11/16	3 15/16	-	-	4 3/16	1
	230	180	240	-	335	170	70	54	51	510	436	424	100	-	-	107	24
SDCD 136	9 7/16	7 1/2	9 7/8	19/32	14	7.087	3	2 5/16	2 3/16	20 7/8	17 15/16	17 1/2	4 3/8	-	-	5 7/16	1
	240	190	250	15	355	180	76	59	55	530	456	444	110	-	-	138	24
SDCD 236	10 1/4	8 1/4	10 5/8	9/16	14 3/4	7.480	3 3/16	2 1/2	2 5/16	22 1/16	19 1/8	18 5/8	4 3/4	-	-	5 7/8	1
	260	210	270	14	375	190	80	64	59	560	486	474	120	-	-	149	24
SDCD 036/MC14	9 1/16	7 1/8	10 13/16	-	13 3/16	6.693	2 3/4	-	-	20 1/16	17 3/16	16 11/16	3 15/16	10	9 1/16	4 3/16	1
	230	180	275	-	335	170	70	-	-	510	436	424	100	254	230	107	24
SDCD 136/MC14	9 1/4	7 1/2	11 3/16	19/32	14	7.087	3	-	-	20 7/8	17 15/16	17 1/2	4 3/8	10	9 1/16	5 7/16	1
	240	190	284	15	355	180	76	-	-	530	456	444	110	254	230	138	24
SDCD 236/MC14	10 1/4	8 1/4	12	9/16	14 3/4	7.480	3 3/16	-	-	22 1/16	19 1/8	18 5/8	4 3/4	10	9 1/16	5 7/8	1
	260	210	305	14	375	190	80	-	-	560	486	474	120	254	230	149	24

NOTE:

* Dimension "X" indicates the centreline of the bearing seat in the housing is offset this distance in relation to the centreline of the housing, away from the oil sump. When oil lubrication is used the static oil level H3 must be maintained.

** Dimension "S" indicates the shaft length from the bearing centre to the end of the shaft on the locknut side, which allows adequate clearance between the shaft end and the end cover. Normally the shaft need not be any longer than required for the adapter sleeve.

For an example on how to order please see page 203.

Series SDCD 000, SDCD 100, SDCD 200, SDCD 000/MC14, SDCD 100/MC14, SDCD 200/MC14

Pillow blocks of ductile iron for bearings with cylindrical bore mounting and grease or oil lubrication

d_a 8 3/8 - 8 3/4 in
d_b 7 1/4 - 7 5/8 in

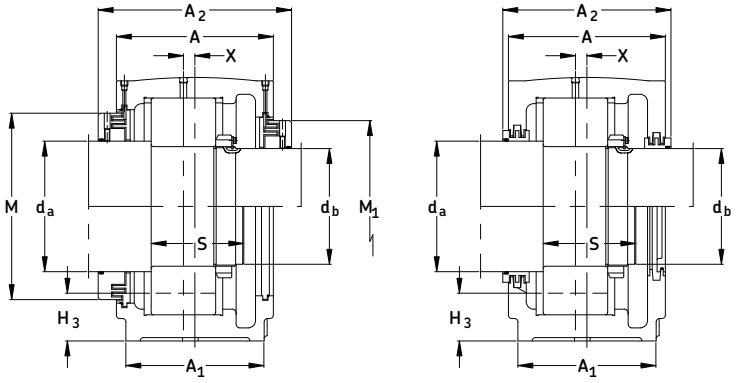

Shaft Dia. d_a/d_b	Complete Pillow Block Assembly	Housing	Seal Assemblies For Shaft Dia d_a	Seal Assemblies For Shaft Dia d_b	Bearing	Lock Nut	Lock Washer	End Cover	Fixing Ring (2 req'd)	Mass Comp
in										kg
d_a 8 3/8										
d_b 7 1/4										
	SDCD 23038	SDCD038	TS44/8 3/8	TS38/7 1/4	23038CC/W33	N 038	W 038	ETS38	FRB 10/290	113
	SDCD 23138	SDCD138	TS44/8 3/8	TS38/7 1/4	23138CC/W33	N 038	W 038	ETS38	FRB 10/320	140
	SDCD 23238	SDCD238	TS44/8 3/8	TS40/7 1/4	23238CC/W33	AN 38	W 38	ETS40	FRB 10/340	181
	SDCD 23038/MC14D	SDCD038/MC14	TSDC44/8 3/8D	TSDC38/7 1/4D	23038CC/W33	N 038	W 038	ASDC38	FRB 10/290	113
	SDCD 23138/MC14D	SDCD138/MC14	TSDC44/8 3/8D	TSDC38/7 1/4D	23138CC/W33	N 038	W 038	ASDC38	FRB 10/320	140
	SDCD 23238/MC14D	SDCD238/MC14	TSDC44/8 3/8D	TSDC38/7 1/4D	23238CC/W33	N 038	W 038	ASDC38	FRB 10/340	181
d_a 8 3/4										
d_b 7 5/8										
	SDCD 23040	SDCD040	TS48/8 3/4	TS40/7 5/8	23040CC/W33	N 040	W 040	ETS40	FRB 10/310	140
	SDCD 23140	SDCD140	TS48/8 3/4	TS40/7 5/8	23140CC/W33	N 040	W 040	ETS40	FRB 10/340	176
	SDCD 23240	SDCD240	TS48/8 3/4	TS44/7 5/8	23240CC/W33	AN 40	W 40	ETS44	FRB 10/360	220
	SDCD 23040/MC14D	SDCD040/MC14	TSDC48/8 3/4D	TSDC40/7 5/8D	23040CC/W33	N 040	W 040	ASDC40	FRB 10/310	140
	SDCD 23140/MC14D	SDCD140/MC14	TSDC48/8 3/4D	TSDC40/7 5/8D	23140CC/W33	N 040	W 040	ASDC40	FRB 10/340	176
	SDCD 23240/MC14D	SDCD240/MC14	TSDC48/8 3/4D	TSDC40/7 5/8D	23240CC/W33	N 040	W 040	ASDC40	FRB 10/360	220

If oil lubrication is to be used, SKF can drill and tap the two bosses for the oil level gauge and oil drain holes, if so specified on your order. Advise the type and size of the gauge you intend to use, gauges are not supplied by SKF.

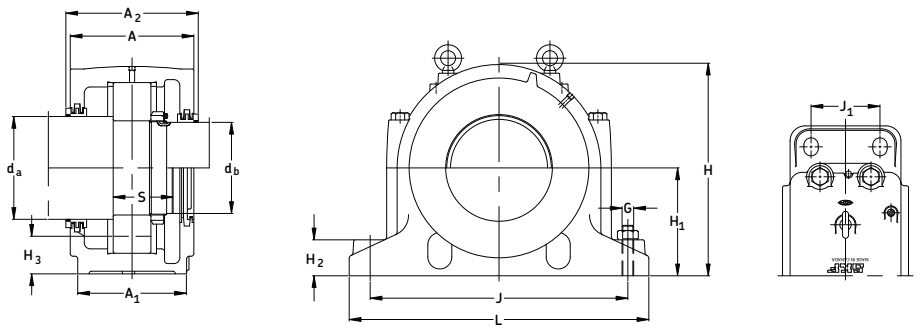

Housing No.	Dimensions							Static Oil Level									Bolts (4 req'd)
	A	A_1	A_2	X*	H	H_1	H_2	H_{3max}	H_{3min}	L	J_{max}	J_{min}	J_1	M	M_1	S**	G
	in/mm																
SDCD 038	9 7/16	7 1/2	9 7/8	-	14	7.087	3	2 9/32	2 3/16	20 7/8	18	17 1/2	4 3/8	-	-	4 1/2	1
	240	190	250	-	355	180	76	58	55	530	456	444	111	-	-	112	24
SDCD 138	10 1/4	8 1/4	10 5/8	13/32	14 3/4	7.480	3 3/16	2 13/32	2 1/4	22 1/16	19 1/8	18 11/16	4 3/4	-	-	5 3/4	1
	260	210	270	10	375	190	80	61	57	560	486	474	120	-	-	146	24
SDCD 238	11	9 1/16	11 7/16	15/32	16 3/16	8.268	3 3/8	3	2 13/16	24	20 5/16	19 13/16	5 1/8	-	-	6 3/8	1 1/4
	280	230	290	12	410	210	85	76	71	610	517	503	130	-	-	163	30
SDCD 038/MC14	9 7/16	7 1/2	11 3/16	-	14	7.087	3	-	-	20 7/8	18	17 1/2	4 3/8	11 3/8	9 5/8	4 1/2	1
	240	190	284	-	355	180	76	-	-	530	456	444	111	289	244	112	24
SDCD 138/MC14	10 1/4	8 1/4	12	13/32	14 3/4	7.480	3 3/16	-	-	22 1/16	19 1/8	18 11/16	4 3/4	11 3/8	9 5/8	5 3/4	1
	260	210	305	10	375	190	80	-	-	560	486	474	120	289	244	146	24
SDCD 238/MC14	11	9 1/16	12 25/32	15/32	16 3/16	8.268	3 3/8	-	-	24	20 5/16	19 13/16	5 1/8	11 3/8	9 5/8	6 3/8	1 1/4
	280	230	325	12	410	210	85	-	-	610	517	503	130	289	244	163	30
SDCD 040	10 1/4	8 1/4	10 5/8	-	14 3/4	7.480	3 3/16	2 13/32	2 7/32	22 1/16	19 1/8	18 5/8	4 3/4	-	-	4 15/16	1
	260	210	270	-	375	190	80	61	56	560	486	474	120	-	-	125	24
SDCD 140	11	9 1/16	11 7/16	13/32	16 3/16	8.268	3 3/8	2 29/32	2 11/16	24	20 5/16	19 13/16	5 1/8	-	-	6 5/16	1 1/4
	280	230	290	10	410	210	85	74	68	610	517	503	130	-	-	160	30
SDCD 240	11 7/16	9 7/16	11 13/16	7/16	17 1/8	8.661	3 9/16	3 1/8	2 7/8	25 3/16	21 1/2	21	5 1/2	-	-	6 13/16	1 1/4
	290	240	300	11	435	220	90	79	73	640	547	533	140	-	-	174	30
SDCD 040/MC14	10 1/4	8 1/4	12	-	14 3/4	7.480	3 3/16	-	-	22 1/16	19 1/8	18 5/8	4 3/4	12 1/16	10	4 15/16	1
	260	210	305	-	375	190	80	-	-	560	486	474	120	306	254	125	24
SDCD 140/MC14	11	9 1/16	12 25/32	13/32	16 3/16	8.268	3 3/8	-	-	24	20 5/16	19 13/16	5 1/8	12 1/16	10	6 5/16	1 1/4
	280	230	325	10	410	210	85	-	-	610	517	503	130	306	254	160	30
SDCD 240/MC14	11 7/16	9 7/16	13 3/16	7/16	17 1/8	8.661	3 9/16	-	-	25 3/16	21 1/2	21	5 1/2	12 1/16	10	6 13/16	1 1/4
	290	240	335	11	435	220	90	-	-	640	547	533	140	306	254	174	30

NOTE:

* Dimension "X" indicates the centreline of the bearing seat in the housing is offset this distance in relation to the centreline of the housing, away from the oil sump. When oil lubrication is used the static oil level H3 must be maintained.

** Dimension "S" indicates the shaft length from the bearing centre to the end of the shaft on the locknut side, which allows adequate clearance between the shaft end and the end cover. Normally the shaft need not be any longer than required for the adapter sleeve.

For an example on how to order please see page 203.

Series SDCD 000, SDCD 100, SDCD 200, SDCD 000/MC14, SDCD 100/MC14, SDCD 200/MC14

Pillow blocks of ductile iron for bearings with cylindrical bore mounting and grease or oil lubrication

d_a 9 9/16 - 10 1/2 in
d_b 8 5/16 - 9 1/16 in

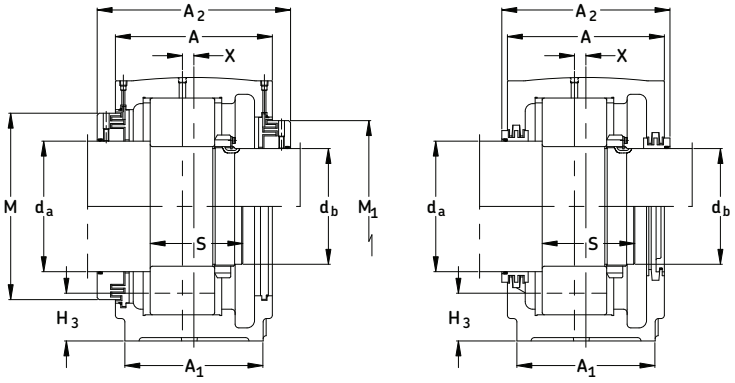

Shaft Dia. d_a/d_b	Complete Pillow Block Assembly	Housing	Seal Assemblies For Shaft Dia d_a	Seal Assemblies For Shaft Dia d_b	Bearing	Lock Nut	Lock Washer	End Cover	Fixing Ring (2 req'd)	Mass Comp
in										kg
d_a 9 9/16										
d_b 8 5/16										
	SDCD 23044	SDCD044	TS52/9 9/16	TS44/8 5/16	23044CC/W33	N 044	W 044	ETS44	FRB 10/340	177
	SDCD 23144	SDCD144	TS52/9 9/16	TS44/8 5/16	23144CC/W33	N 044	W 044	ETS44	FRB 10/370	209
	SDCD 23244	SDCD244	TS52/9 9/16	TS44/8 5/16	23244CC/W33	N 044	W 044	ETS48	FRB 10/400	288
	SDCD 23044/MC14D	SDCD044/MC14	TSDC48-909spec.	TSDC44/8 5/16D	23044CC/W33	N 044	W 044	ASDC44	FRB 10/340	177
	SDCD 23144/MC14D	SDCD144/MC14	TSDC52/9 9/16D	TSDC44/8 5/16D	23144CC/W33	N 044	W 044	ASDC44	FRB 10/370	209
	SDCD 23244/MC14D	SDCD244/MC14	TSDC52/9 9/16D	TSDC44/8 5/16D	23244CC/W33	N 044	W 044	ASDC44	FRB 10/400	288
d_a 10 1/2										
d_b 9 1/16										
	SDCD 23048	SDCD048	TS56/10 1/2	TS48/9 1/16	23048CC/W33	N 048	P 48	ETS48	FRB 10/360	209
	SDCD 23148	SDCD148	TS56/10 1/2	TS48/9 1/16	23148CC/W33	N 048	P 48	ETS48	FRB 10/400	270
	SDCD 23248	SDCD248	TS56/10 1/2	TS52/9 1/16	23248CC/W33	N 048	P 48	ETS52	FRB 10/440	358
	SDCD 23048/MC14D	SDCD048/MC14	TSDC56/10 1/2D	TSDC48/9 1/16D	23048CC/W33	N 048	P 48	ASDC48	FRB 10/360	209
	SDCD 23148/MC14D	SDCD148/MC14	TSDC56/10 1/2D	TSDC48/9 1/16D	23148CC/W33	N 048	P 48	ASDC48	FRB 10/400	270
	SDCD 23248/MC14D	SDCD248/MC14	TSDC56/10 1/2D	TSDC48/9 1/16D	23248CC/W33	N 048	P 48	ASDC48	FRB 10/440	358

If oil lubrication is to be used, SKF can drill and tap the two bosses for the oil level gauge and oil drain holes, if so specified on your order. Advise the type and size of the gauge you intend to use, gauges are not supplied by SKF.

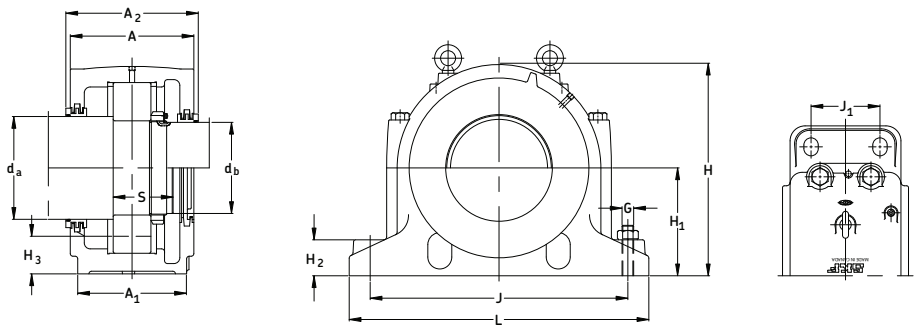

Housing No.	Dimensions							Static Oil Level									Bolts (4 req'd)
	A	A1	A2	X*	H	H1	H2	H3max	H3min	L	Jmax	Jmin	J1	M	M1	S**	G
	in/mm																
SDCD 044	11	9 1/16	11 7/16	-	16 3/16	8.268	3 3/8	2 11/16	2 7/16	24	20 5/16	19 13/16	5 1/8	-	-	5 7/16	1 1/4
	280	230	290	-	410	210	85	68	62	610	517	503	130	-	-	139	30
SDCD 144	11 7/16	9 7/16	11 13/16	15/32	17 1/8	8.661	3 9/16	2 13/16	2 9/16	25 3/16	21 1/2	21	5 1/2	-	-	6 11/16	1 1/4
	290	240	300	12	435	220	90	71	65	640	547	533	140	-	-	170	30
SDCD 244	12 1/4	10 1/4	12 5/8	25/32	18 3/4	9.449	3 3/4	3 9/32	3 1/32	27 9/16	23 7/8	23 3/8	5 7/8	-	-	7 1/2	1 1/4
	310	260	320	20	475	240	95	83	77	700	607	593	150	-	-	190	30
SDCD 044/MC14	11	9 1/16	12 25/32	-	16 3/16	8.268	3 3/8	-	-	24	20 5/16	19 13/16	5 1/8	12 7/8	11 3/8	5 7/16	1 1/4
	280	230	325	-	410	210	85	-	-	610	517	503	130	327	289	139	30
SDCD 144/MC14	11 7/16	9 7/16	13 3/16	15/32	17 1/8	8.661	3 9/16	-	-	25 3/16	21 1/2	21	5 1/2	12 7/8	11 3/8	6 11/16	1 1/4
	290	240	335	12	435	220	90	-	-	640	547	533	140	327	289	170	30
SDCD 244/MC14	12 1/4	10 1/4	13 31/32	25/32	18 3/4	9.449	3 3/4	-	-	27 9/16	23 7/8	23 3/8	5 7/8	12 7/8	11 3/8	7 1/2	1 1/4
	310	260	355	20	475	240	95	-	-	700	607	593	150	327	289	190	30
SDCD 048	11 7/16	9 7/16	11 13/16	-	17 1/8	8.661	3 9/16	2 11/16	2 7/16	25 3/16	21 1/2	21	5 1/2	-	-	5 11/16	1 1/4
	290	240	300	-	435	220	90	68	62	640	547	533	140	-	-	144	30
SDCD 148	12 1/4	10 1/4	12 5/8	15/32	18 3/4	9.449	3 3/4	3 1/16	2 13/16	27 9/16	23 7/8	23 3/8	5 7/8	-	-	7 3/16	1 1/4
	310	260	320	12	475	240	95	78	71	700	607	593	150	-	-	182	30
SDCD 248	12 5/8	11 1/16	13	13/16	20 5/16	10.236	3 15/16	3 7/16	3 5/32	30 5/16	25 7/8	25 1/4	6 5/16	-	-	8 3/16	1 1/2
	320	280	330	21	515	260	100	87	80	770	658	642	160	-	-	208	36
SDCD 048/MC14	11 7/16	9 7/16	13 3/16	-	17 1/8	8.661	3 9/16	-	-	25 3/16	21 1/2	21	5 1/2	13 5/8	12 1/16	5 11/16	1 1/4
	290	240	335	-	435	220	90	-	-	640	547	533	140	346	306	144	30
SDCD 148/MC14	12 1/4	10 1/4	13 31/32	15/32	18 3/4	9.449	3 3/4	-	-	27 9/16	23 7/8	23 3/8	5 7/8	13 5/8	12 1/16	7 3/16	1 1/4
	310	260	355	12	475	240	95	-	-	700	607	593	150	346	306	182	30
SDCD 248/MC14	12 5/8	11 1/16	14 3/8	13/16	20 5/16	10.236	3 15/16	-	-	30 5/16	25 7/8	25 1/4	6 5/16	13 5/8	12 1/16	8 3/16	1 1/2
	320	280	365	21	515	260	100	-	-	770	658	642	160	346	306	208	36

NOTE:

* Dimension "X" indicates the centreline of the bearing seat in the housing is offset this distance in relation to the centreline of the housing, away from the oil sump. When oil lubrication is used the static oil level H3 must be maintained.

** Dimension "S" indicates the shaft length from the bearing centre to the end of the shaft on the locknut side, which allows adequate clearance between the shaft end and the end cover. Normally the shaft need not be any longer than required for the adapter sleeve.

For an example on how to order please see page 203.

Series SDCD 000, SDCD 100, SDCD 200, SDCD 000/MC14, SDCD 100/MC14, SDCD 200/MC14

Pillow blocks of ductile iron for bearings with cylindrical bore mounting and grease or oil lubrication

d_a 11 1/4 - 12 1/8 in

d_b 9 7/8 - 10 5/8 in

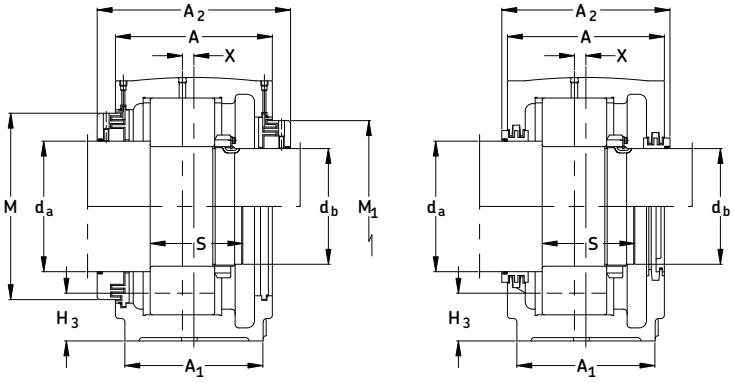

Shaft Dia. d_a/d_b	Complete Pillow Block Assembly	Housing	Seal Assemblies For Shaft Dia d_a	Seal Assemblies For Shaft Dia d_b	Bearing	Lock Nut	Lock Washer	End Cover	Fixing Ring (2 req'd)	Mass Comp
in										kg
d_a 11 1/4										
d_b 9 7/8										
	SDCD 23052	SDCD052	TS60/11 1/4	TS52/9 7/8	23052CC/W33	N 052	P 52	ETS52	FRB 10/400	270
	SDCD 23152	SDCD152	TS60/11 1/4	TS52/9 7/8	23152CC/W33	N 052	P 52	ETS52	FRB 10/440	336
	SDCD 23252	SDCD252	TS60/11 1/4	TS60/9 7/8	23252CAC/W33	N 052	P 52	ETS60	FRB 10/480	490
	SDCD 23052/MC14D	SDCD052/MC14	TSDC60/11 1/4D	TSDC52/9 7/8D	23052CC/W33	N 052	P 52	ASDC52	FRB 10/400	270
	SDCD 23152/MC14D	SDCD152/MC14	TSDC60/11 1/4D	TSDC52/9 7/8D	23152CC/W33	N 052	P 52	ASDC52	FRB 10/440	336
	SDCD 23252/MC14D	SDCD252/MC14	TSDC60/11 1/4D	TSDC52/9 7/8D	23252CAC/W33	N 052	P 52	ASDC52	FRB 10/480	490
d_a 12 1/8										
d_b 10 5/8										
	SDCD 23056	SDCD056	TS64/12 1/8	TS56/10 5/8	23056CC/W33	N 056	P 56	ETS56	FRB 10/420	270
	SDCD 23156	SDCD156	TS64/12 1/8	TS56/10 5/8	23156CC/W33	N 056	P 56	ETS56	FRB 10/460	381
	SDCD 23256	SDCD256	TS64/12 1/8	TS60/10 5/8	23256CAC/W33	N 056	P 56	ETS60	FRB 10/500	503
	SDCD 23056/MC14D	SDCD056/MC14	TSDC64/12 1/8D	TSDC56/10 5/8D	23056CC/W33	N 056	P 56	ASDC56	FRB 10/420	270
	SDCD 23156/MC14D	SDCD156/MC14	TSDC64/12 1/8D	TSDC56/10 5/8D	23156CC/W33	N 056	P 56	ASDC56	FRB 10/460	381
	SDCD 23256/MC14D	SDCD256/MC14	TSDC64/12 1/8D	TSDC56/10 5/8D	23256CAC/W33	N 056	P 56	ASDC56	FRB 10/500	503

If oil lubrication is to be used, SKF can drill and tap the two bosses for the oil level gauge and oil drain holes, if so specified on your order. Advise the type and size of the gauge you intend to use, gauges are not supplied by SKF.

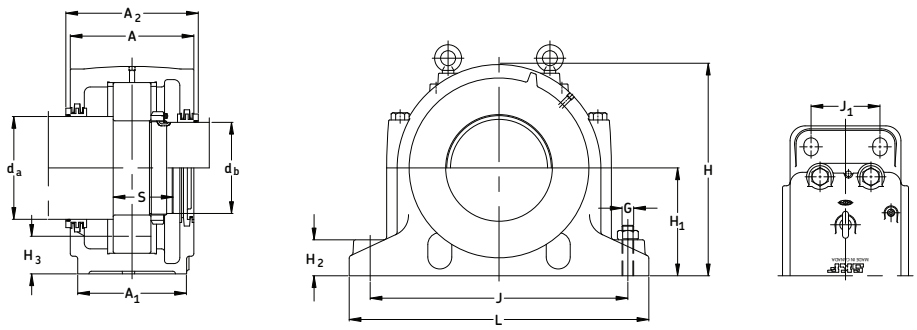

Housing No.	Dimensions							Static Oil Level									Bolts (4 req'd)
	A	A_1	A_2	X*	H	H_1	H_2	H_{3max}	H_{3min}	L	J_{max}	J_{min}	J_1	M	M_1	S**	G
	in/mm																
SDCD 052	12 1/4	10 1/4	12 5/8	-	18 3/4	9.449	3 3/4	2 7/8	2 9/16	27 9/16	23 7/8	23 5/16	5 7/8	-	-	6 3/16	1 1/4
	310	260	320	-	475	240	95	73	65	700	607	593	150	-	-	158	30
SDCD 152	12 5/8	11	13	1/2	20 5/16	10.236	3 15/16	3 1/4	3	30 5/16	25 7/8	25 1/4	6 5/16	-	-	7 7/8	1 1/2
	320	280	330	13	515	260	100	83	76	770	658	642	160	-	-	200	36
SDCD 252	13 13/16	12 1/4	14 3/16	1 1/32	23 1/4	11.811	4 3/8	4 13/32	4 1/32	32 11/16	28 1/4	27 5/8	7 1/2	-	-	9 3/8	1 1/2
	350	310	360	26	590	300	110	112	102	830	718	702	190	-	-	239	36
SDCD 052/MC14	12 1/4	10 1/4	13 31/32	-	18 3/4	9.449	3 3/4	-	-	27 9/16	23 7/8	23 5/16	5 7/8	14 7/16	12 7/8	6 3/16	1 1/4
	310	260	355	-	475	240	95	-	-	700	607	593	150	367	327	158	30
SDCD 152/MC14	12 5/8	11	14 3/8	1/2	20 5/16	10.236	3 15/16	-	-	30 5/16	25 7/8	25 1/4	6 5/16	14 7/16	12 7/8	7 7/8	1 1/2
	320	280	365	13	515	260	100	-	-	770	658	642	160	367	327	200	36
SDCD 252/MC14	13 13/16	12 1/4	15 17/32	1 1/32	23 1/4	11.811	4 3/8	-	-	32 11/16	28 1/4	27 5/8	7 1/2	14 7/16	12 7/8	9 3/8	1 1/2
	350	310	394	26	590	300	110	-	-	830	718	702	190	367	327	239	36
SDCD 056	12 1/4	10 1/4	12 5/8	-	18 3/4	9.449	3 3/4	2 1/2	2 3/16	27 9/16	23 7/8	23 5/16	5 7/8	-	-	6 1/4	1 1/4
	310	260	320	-	475	240	95	63	55	700	607	593	150	-	-	159	30
SDCD 156	12 5/8	11	13	5/8	21 5/8	11.024	4 1/8	3 5/8	3 3/8	31 1/8	26 11/16	26 1/16	6 5/16	-	-	8	1 1/2
	320	280	350	16	550	280	105	93	86	790	678	662	160	-	-	204	36
SDCD 256	13 13/16	12 1/4	14 3/16	1	23 1/4	11.811	4 3/8	4	3 5/8	32 11/16	28 1/4	27 5/8	7 1/2	-	-	9 7/16	1 1/2
	350	310	360	25	590	300	110	101	92	830	718	702	190	-	-	240	36
SDCD 056/MC14	12 1/4	10 1/4	13 31/32	-	18 3/4	9.449	3 3/4	-	-	27 9/16	23 7/8	23 5/16	5 7/8	15 19/32	13 5/8	6 1/4	1 1/4
	310	260	355	-	475	240	95	-	-	700	607	593	150	396	346	159	30
SDCD 156/MC14	12 5/8	11	14 3/8	5/8	21 5/8	11.024	4 1/8	-	-	31 1/8	26 11/16	26 1/16	6 5/16	15 19/32	13 5/8	8	1 1/2
	320	280	365	16	550	280	105	-	-	790	678	662	160	396	346	204	36
SDCD 256/MC14	13 13/16	12 1/4	15 17/32	1 1/32	23 1/4	11.811	4 3/8	-	-	32 11/16	28 1/4	27 5/8	7 1/2	15 19/32	13 5/8	9 7/16	1 1/2
	350	310	394	26	590	300	110	-	-	830	718	702	190	396	346	240	36

NOTE:

* Dimension "X" indicates the centreline of the bearing seat in the housing is offset this distance in relation to the centreline of the housing, away from the oil sump. When oil lubrication is used the static oil level H3 must be maintained.

** Dimension "S" indicates the shaft length from the bearing centre to the end of the shaft on the locknut side, which allows adequate clearance between the shaft end and the end cover. Normally the shaft need not be any longer than required for the adapter sleeve.

For an example on how to order please see page 203.

Series SDCD 000, SDCD 100, SDCD 200, SDCD 000/MC14, SDCD 100/MC14, SDCD 200/MC14

Pillow blocks of ductile iron for bearings with cylindrical bore mounting and grease or oil lubrication

d_a 13 - 13 3/4 in

d_b 11 7/16 - 12 3/16 in

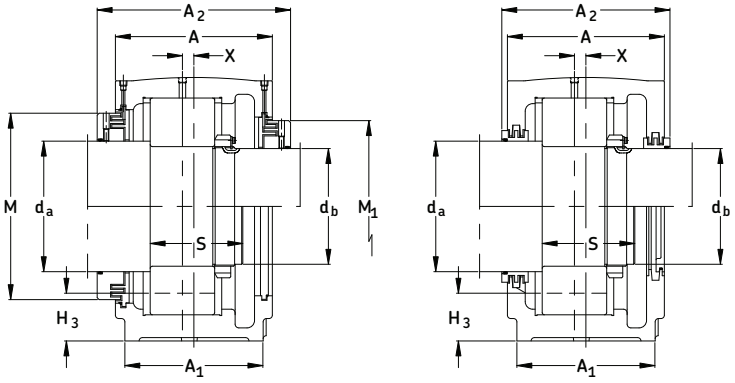

Shaft Dia. d_a/d_b	Complete Pillow Block Assembly	Housing	Seal Assemblies For Shaft Dia d_a	Seal Assemblies For Shaft Dia d_b	Bearing	Lock Nut	Lock Washer	End Cover	Fixing Ring (2 req'd)	Mass Comp
in										kg
d_a 13										
d_b 11 7/16										
	SDCD 23060	SDCD060	TS68/13	TS60/ 11 7/16	23060CC/W33	N 060	P 60	ETS60	FRB 10/460	381
	SDCD 23160	SDCD160	TS68/13	TS60/ 11 7/16	23160CC/W33	N 060	P 60	ETS60	FRB 10/500	474
	SDCD 23260	SDCD260	TS68/13	TS64/ 11 7/16	23260CAC/W33	N 060	P 60	ETS64	FRB 10/540	585
	SDCD 23060/MC14D	SDCD060/MC14	TSDC68/13D	TSDC60/ 11 7/16D	23060CC/W33	N 060	P 60	ASDC60	FRB 10/460	381
	SDCD 23160/MC14D	SDCD160/MC14	TSDC68/13D	TSDC60/ 11 7/16D	23160CC/W33	N 060	P 60	ASDC60	FRB 10/500	474
	SDCD 23260/MC14D	SDCD260/MC14	TSDC68/13D	TSDC60/ 11 7/16D	23260CAC/W33	N 060	P 60	ASDC60	FRB 10/540	585
d_a 13 3/4										
d_b 12 3/16										
	SDCD 23064	SDCD064	TS72/13 3/4	TS64/12 3/16	23064CC/W33	N 064	P 64	ETS64	FRB 10/480	381
	SDCD 23164	SDCD164	TS72/13 3/4	TS64/12 3/16	23164CC/W33	N 064	P 64	ETS64	FRB 10/540	558
	SDCD 23264	SDCD264	TS72/13 3/4	TS64/12 3/16	23264CAC/W33	N 064	P 64	ETS64	FRB 10/580	834
	SDCD 23064/MC14D	SDCD064/MC14	TSDC72/13 3/4D	TSDC64/12 3/16D	23064CC/W33	N 064	P 64	ASDC64	FRB 10/480	381
	SDCD 23164/MC14D	SDCD164/MC14	TSDC72/13 3/4D	TSDC64/12 3/16D	23164CC/W33	N 064	P 64	ASDC64	FRB 10/540	558
	SDCD 23264/MC14D	SDCD264/MC14	TSDC72/13 3/4D	TSDC64/12 3/16D	23264CAC/W33	N 064	P 64	ASDC64	FRB 10/580	834

If oil lubrication is to be used, SKF can drill and tap the two bosses for the oil level gauge and oil drain holes, if so specified on your order. Advise the type and size of the gauge you intend to use, gauges are not supplied by SKF.

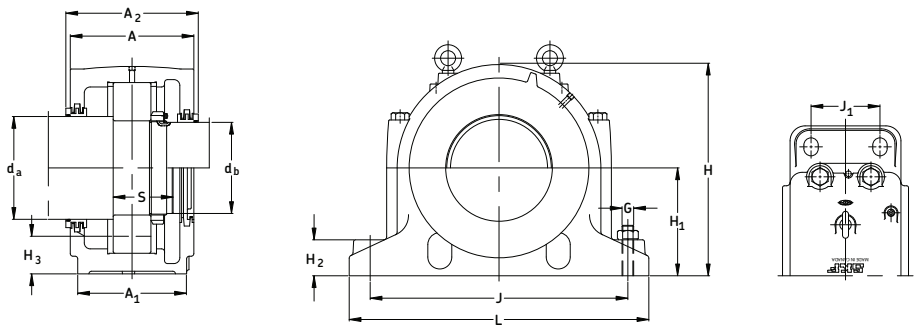

Housing No.	Dimensions							Static Oil Level									Bolts (4 req'd)
	A	A_1	A_2	X*	H	H_1	H_2	H_{3max}	H_{3min}	L	J_{max}	J_{min}	J_1	M	M_1	S**	G
	in/mm																
SDCD 060	12 5/8	11 1/16	13	-	21 5/8	11.024	4 1/8	3 7/16	3 1/16	31 1/8	26 11/16	26 1/16	6 5/16	-	-	6 13/16	1 1/2
	320	280	330	-	550	280	105	87	78	790	678	662	160	-	-	174	36
SDCD 160	13 3/4	12 1/4	14 3/16	7/8	23 1/4	11.811	4 3/8	3 13/16	3 1/2	32 11/16	28 1/4	27 5/8	7 1/2	-	-	9 1/8	1 1/2
	350	310	360	22	590	300	110	97	89	830	718	702	190	-	-	232	36
SDCD 260	14 9/16	13	15	1 5/32	24 13/16	12.598	4 9/16	4 3/16	3 25/32	34 5/8	29 13/16	29 3/16	7 7/8	-	-	10 3/16	1 1/2
	370	330	380	29	630	320	115	106	96	880	758	742	200	-	-	259	36
SDCD 060/MC14	12 5/8	11 1/16	14 3/8	-	21 5/8	11.024	4 1/8	-	-	31 1/8	26 11/16	26 1/16	6 5/16	16 13/32	14 7/16	6 13/16	1 1/2
	320	280	365	-	550	280	105	-	-	790	678	662	160	417	367	174	36
SDCD 160/MC14	13 3/4	12 1/4	15 17/32	7/8	23 1/4	11.811	4 3/8	-	-	32 11/16	28 1/4	27 5/8	7 1/2	16 13/32	14 7/16	9 1/8	1 1/2
	350	310	394	22	590	300	110	-	-	830	718	702	190	417	367	232	36
SDCD 260/MC14	14 9/16	13	16 5/16	1 5/32	24 13/16	12.598	4 9/16	-	-	34 5/8	29 13/16	29 3/16	7 7/8	16 13/32	14 7/16	10 3/16	1 1/2
	370	330	414	29	630	320	115	-	-	880	758	742	200	417	367	259	36
SDCD 064	12 5/8	11 1/16	13	-	21 5/8	11.024	4 1/8	3 1/2	2 11/16	31 1/8	26 11/16	2 1/16	2 5/16	-	-	6 7/8	1 1/2
	320	280	330	-	550	280	105	77	68	790	678	662	160	-	-	175	36
SDCD 164	14 9/16	13	15	29/32	24 13/16	12.598	4 1/2	4 1/16	3 5/8	34 5/8	29 13/16	29 1/4	7 7/8	-	-	9 7/8	1 1/2
	370	330	380	23	630	320	115	103	93	880	758	742	200	-	-	251	36
SDCD 264	16 1/8	14 9/16	16 1/2	1 7/32	27 3/4	14.173	4 3/4	5 5/32	4 23/32	39 3/8	34 5/16	33 3/8	9 1/16	-	-	11 1/2	1 3/4
	410	370	420	31	705	360	120	131	120	1000	872	848	230	-	-	293	45
SDCD 064/MC14	12 5/8	11 1/16	14 3/8	-	21 5/8	11.024	4 1/8	-	-	31 1/8	26 11/16	26 1/16	6 5/16	17 5/32	15 19/32	6 7/8	1 1/2
	320	280	365	-	550	280	105	-	-	790	678	662	160	436	396	175	36
SDCD 164/MC14	14 9/16	13	16 5/16	29/32	24 13/16	12.598	4 1/2	-	-	34 5/8	29 13/16	29 1/4	7 7/8	17 5/32	15 19/32	9 7/8	1 1/2
	370	330	414	23	630	320	115	-	-	880	758	742	200	436	396	251	36
SDCD 264/MC14	16 1/8	14 9/16	17 29/32	1 7/32	27 3/4	14.173	4 3/4	-	-	39 3/8	34 5/16	33 3/8	9 1/16	17 5/32	15 19/32	11 1/2	1 3/4
	410	370	455	31	705	360	120	-	-	1000	872	848	230	436	396	293	45

NOTE:

* Dimension "X" indicates the centreline of the bearing seat in the housing is offset this distance in relation to the centreline of the housing, away from the oil sump. When oil lubrication is used the static oil level H3 must be maintained.

** Dimension "S" indicates the shaft length from the bearing centre to the end of the shaft on the locknut side, which allows adequate clearance between the shaft end and the end cover. Normally the shaft need not be any longer than required for the adapter sleeve.

For an example on how to order please see page 203.

Series SDCD 000, SDCD 100, SDCD 200, SDCD 000/MC14, SDCD 100/MC14, SDCD 200/MC14

Pillow blocks of ductile iron for bearings with cylindrical bore mounting and grease or oil lubrication

d_a 14 ½ - 15 ¼ in

d_b 13 - 13 ¾ in

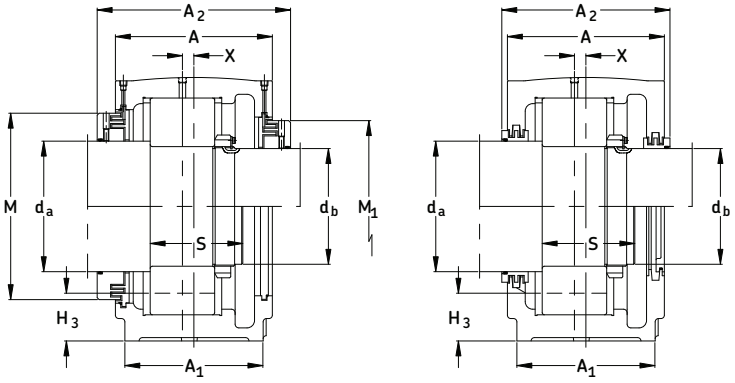

Shaft Dia. d_a/d_b	Complete Pillow Block Assembly	Housing	Seal Assemblies For Shaft Dia d_a	Seal Assemblies For Shaft Dia d_b	Bearing	Lock Nut	Lock Washer	End Cover	Fixing Ring (2 req'd)	Mass Comp
in										kg
d_a 14 ½										
d_b 13										
	SDCD 23068	SDCD068	TS80/14 ½	TS68/13	23068CC/W33	N 068	P 68	ETS68	FRB 10/520	475
	SDCD 23168	SDCD168	TS80/14 ½	TS68/13	23168CC/W33	N 068	P 68	ETS68	FRB 10/580	789
	SDCD 23268	SDCD268	TS80/14 ½	TS68/13	23268CA/W33	N 068	P 68	ETS68	FRB 10/620	1063
	SDCD 23068/MC14D	SDCD068/MC14	TSDC76/14 ½D	TSDC68/13D	23068CC/W33	N 068	P 68	ASDC68	FRB 10/520	474
	SDCD 23168/MC14D	SDCD168/MC14	TSDC76/14 ½D	TSDC68/13D	23168CC/W33	N 068	P 68	ASDC68	FRB 10/580	789
	SDCD 23268/MC14D	SDCD268/MC14	TSDC76/14 ½D	TSDC68/13D	23268CA/W33	N 068	P 68	ASDC68	FRB 10/620	1063
d_a 15 ¼										
d_b 13 ¾										
	SDCD 23072	SDCD072	TS84/15 ¼	TS72/13 ¾	23072CC/W33	N 072	P 72	ETS72	FRB 10/540	558
	SDCD 23172	SDCD172	TS84/15 ¼	TS72/13 ¾	23172CAC/W33	N 072	P 72	ETS72	FRB 10/600	814
	SDCD 23272	SDCD272	TS84/15 ¼	TS72/13 ¾	23272CA/W33	N 072	P 72	ETS72	FRB 10/650	1107
	SDCD 23072/MC14D	SDCD072/MC14	TSDC80/15 ¼D	TSDC72/13 ¾D	23072CC/W33	N 072	P 72	ASDC72	FRB 10/540	558
	SDCD 23172/MC14D	SDCD172/MC14	TSDC80/15 ¼D	TSDC72/13 ¾D	23172CAC/W33	N 072	P 72	ASDC72	FRB 10/600	814
	SDCD 23272/MC14D	SDCD272/MC14	TSDC80/15 ¼D	TSDC72/13 ¾D	23272CA/W33	N 072	P 72	ASDC72	FRB 10/650	1107

If oil lubrication is to be used, SKF can drill and tap the two bosses for the oil level gauge and oil drain holes, if so specified on your order. Advise the type and size of the gauge you intend to use, gauges are not supplied by SKF.

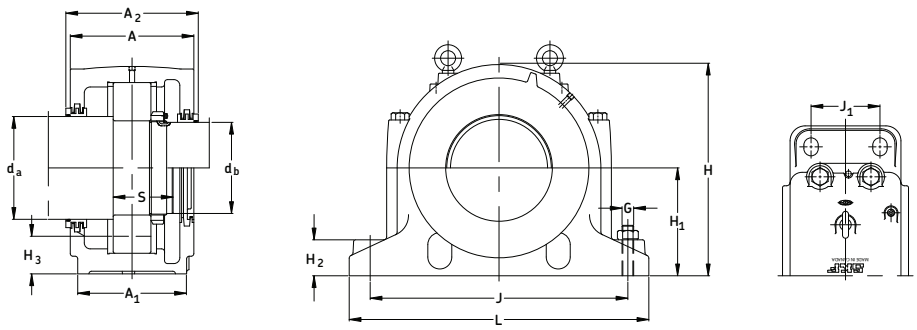

Housing No.	Dimensions							Static Oil Level									Bolts (4 req'd)
	A	A_1	A_2	X*	H	H_1	H_2	H_{3max}	H_{3min}	L	J_{max}	J_{min}	J_1	M	M_1	S**	G
	in/mm																
SDCD 068	13 13/16	12 1/4	14 3/16	-	23 1/4	11.811	4 3/8	3 1/4	2 13/16	32 11/16	28 1/4	27 5/8	7 1/2	-	-	7 11/16	1 1/2
	350	310	360	-	590	300	110	82	71	830	718	702	190	-	-	196	36
SDCD 168	16 1/8	14 9/16	16 1/2	1 7/32	27 3/4	14.173	4 3/4	5 1/32	4 9/16	39 3/8	34 5/16	33 3/8	9 1/16	-	-	11 3/16	1 3/4
	410	370	420	31	705	360	120	128	116	1000	872	848	230	-	-	284	45
SDCD 268	17 1/8	15 1/2	17 1/2	1 7/32	30 1/8	15.354	5	5 23/32	5 7/32	44	38 1/2	37 1/2	9 1/4	-	-	12 1/4	2
	435	394	445	31	765	390	127	145	132	1118	977	953	235	-	-	312	50
SDCD 068/MC14	13 13/16	12 1/4	15 17/32	-	23 1/4	11.811	4 3/8	-	-	32 11/16	28 1/4	27 5/8	7 1/2	17 29/32	16 13/32	7 11/16	1 1/2
	350	310	394	-	590	300	110	-	-	830	718	702	190	455	417	196	36
SDCD 168/MC14	16 1/8	14 9/16	17 29/32	1 7/32	27 3/4	14.173	4 3/4	-	-	39 3/8	34 5/16	33 3/8	9 1/16	17 29/32	16 13/32	11 3/16	1 3/4
	410	370	455	31	705	360	120	-	-	1000	872	848	230	455	417	284	45
SDCD 268/MC14	17 1/8	15 1/2	18 7/8	1 7/32	30 1/8	15.354	5	-	-	44	38 1/2	37 1/2	9 1/4	17 29/32	16 13/32	12 1/4	2
	435	394	479	31	765	390	127	-	-	1118	977	953	235	455	417	312	50
SDCD 072	14 9/16	13	15	-	24 13/16	12.598	4 1/2	3 23/32	3 11/32	34 11/16	29 13/16	29 1/4	7 7/8	-	-	8 1/8	1 1/2
	370	330	380	-	630	320	115	94	85	880	758	742	200	-	-	207	36
SDCD 172	16 1/8	14 9/16	16 1/2	1 7/32	27 3/4	14.173	4 3/4	4 9/16	4 1/8	39 3/8	34 3/8	33 3/8	9 1/16	-	-	11 3/16	1 3/4
	410	370	420	31	705	360	120	116	104	1000	872	848	230	-	-	284	45
SDCD 272	17 1/8	15 1/2	17 1/2	1 7/32	30 1/8	15.354	5	5 9/32	4 23/32	44	38 1/2	37 1/2	9 1/4	-	-	12 7/16	2
	435	394	445	31	765	390	127	134	120	1118	977	953	235	-	-	316	50
SDCD 072/MC14	14 9/16	13	16 5/16	-	24 13/16	12.598	4 1/2	-	-	34 11/16	29 13/16	29 1/4	7 7/8	18 21/32	17 5/32	8 1/8	1 1/2
	370	330	389	-	630	320	115	-	-	880	758	742	200	474	436	207	36
SDCD 172/MC14	16 1/8	14 9/16	17 29/32	1 7/32	27 3/4	14.173	3/4	-	-	39 3/8	34 3/8	33 3/8	9 1/16	18 21/32	17 5/32	11 3/16	1 3/4
	410	370	455	31	705	360	120	-	-	1000	872	848	230	474	436	284	45
SDCD 272/MC14	17 1/8	15 1/2	18 7/8	1 7/32	30 1/8	15.354	5	-	-	44	38 1/2	37 1/2	9 1/4	18 21/32	17 5/32	12 7/16	2
	435	394	479	31	765	390	127	-	-	1118	977	953	235	474	436	316	50

NOTE:

* Dimension "X" indicates the centreline of the bearing seat in the housing is offset this distance in relation to the centreline of the housing, away from the oil sump. When oil lubrication is used the static oil level H3 must be maintained.

** Dimension "S" indicates the shaft length from the bearing centre to the end of the shaft on the locknut side, which allows adequate clearance between the shaft end and the end cover. Normally the shaft need not be any longer than required for the adapter sleeve.

For an example on how to order please see page 203.

Series SDCD 000, SDCD 100, SDCD 200, SDCD 000/MC14, SDCD 100/MC14, SDCD 200/MC14

Pillow blocks of ductile iron for bearings with cylindrical bore mounting and grease or oil lubrication

d_a 16 1/8 - 17 in

d_b 14 1/2 - 15 1/4 in

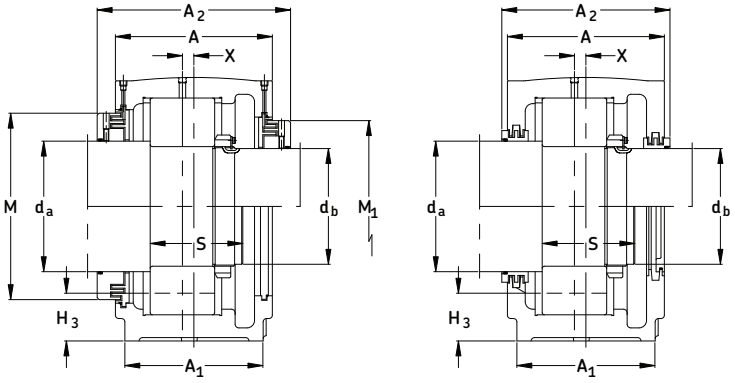

Shaft Dia. d_a/d_b	Complete Pillow Block Assembly	Housing	Seal Assemblies For Shaft Dia d_a	Seal Assemblies For Shaft Dia d_b	Bearing	Lock Nut	Lock Washer	End Cover	Fixing Ring (2 req'd)	Mass Comp
in										kg
d_a 16 1/8										
d_b 14 1/2										
	SDCD 23076	SDCD076	TS88/16 1/8	TS80/14 1/2	23076CC/W33	N 076	P 76	ETS80	FRB 10/560	558
	SDCD 23176	SDCD176	TS88/16 1/8	TS80/14 1/2	23176CA/W33	N 076	P 76	ETS80	FRB 10/620	989
	SDCD 23276	SDCD276	TS88/16 1/8	TS80/14 1/2	23276CA/W33	N 076	P 76	ETS80	FRB 10/680	1338
	SDCD 23076/MC14D	SDCD076/MC14	TSDC84/16 1/8D	TSDC76/14 1/2D	23076CC/W33	N 076	P 76	ASDC76	FRB 10/560	558
	SDCD 23176/MC14D	SDCD176/MC14	TSDC84/16 1/8D	TSDC76/14 1/2D	23176CA/W33	N 076	P 76	ASDC76	FRB 10/620	989
	SDCD 23276/MC14D	SDCD276/MC14	TSDC84/16 1/8D	TSDC76/14 1/2D	23276CA/W33	N 076	P 76	ASDC76	FRB 10/680	1338
d_a 17										
d_b 15 1/4										
	SDCD 23080	SDCD080	TS92/17	TS84/15 1/4	23080CAC/W33	N 080	P 80	ETS84	FRB 10/600	814
	SDCD 23180	SDCD180	TS92/17	TS84/15 1/4	23180CA/W33	N 080	P 80	ETS84	FRB 10/650	1029
	SDCD 23280	SDCD280	TS92/17	TS84/15 1/4	23280CA/W33	N 080	P 80	ETS84	FRB 10/720	1433
	SDCD 23080/MC14D	SDCD080/MC14	TSDC88/17D	TSDC80/15 1/4D	23080CAC/W33	N 080	P 80	ASDC80	FRB 10/600	814
	SDCD 23180/MC14D	SDCD180/MC14	TSDC88/17D	TSDC80/15 1/4D	23180CA/W33	N 080	P 80	ASDC80	FRB 10/650	1029
	SDCD 23280/MC14D	SDCD280/MC14	TSDC88/17D	TSDC80/15 1/4D	23280CA/W33	N 080	P 80	ASDC80	FRB 10/720	1433

If oil lubrication is to be used, SKF can drill and tap the two bosses for the oil level gauge and oil drain holes, if so specified on your order. Advise the type and size of the gauge you intend to use, gauges are not supplied by SKF.

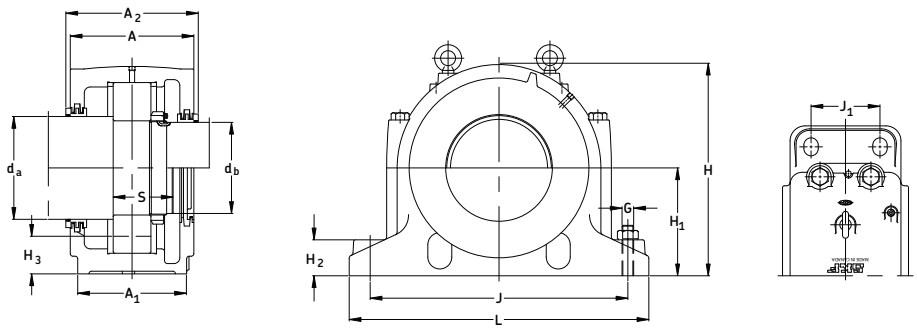

Housing No.	Dimensions							Static Oil Level									Bolts (4 req'd)
	A	A_1	A_2	X*	H	H_1	H_2	H_{3max}	H_{3min}	L	J_{max}	J_{min}	J_1	M	M_1	S**	G
	in/mm																
SDCD 076	14 9/16	13	15	-	24 13/16	12.598	4 1/2	3 1/4	2 27/32	34 11/16	29 13/16	29 1/4	7 7/8	-	-	8 1/8	1 1/2
	370	330	380	-	630	320	115	83	72	880	758	742	200	-	-	207	36
SDCD 176	17 1/8	15 1/2	17 1/2	1 7/32	30 1/8	15.354	5	5 7/16	5	44	38 1/2	37 1/2	9 1/4	-	-	11 11/16	2
	435	394	445	31	765	390	127	138	127	1118	978	953	235	-	-	297	50
SDCD 276	18 1/8	16 1/2	18 1/2	1 7/32	33 1/8	16.737	5	6 1/8	5 9/16	47 1/4	41 3/16	40 1/4	9 7/8	-	-	13 1/8	2
	460	419	470	31	841	425	127	155	141	1200	1047	1022	251	-	-	333	50
SDCD 076/MC14	14 9/16	13	16 5/16	-	24 13/16	12.598	4 1/2	-	-	34 11/16	29 13/16	29 1/4	7 7/8	19 1/2	17 29/32	8 1/8	1 1/2
	370	330	389	-	630	320	115	-	-	880	758	742	200	495	455	207	36
SDCD 176/MC14	17 1/8	15 1/2	18 7/8	1 7/32	30 1/8	15.354	5	-	-	44	38 1/2	37 1/2	9 1/4	19 1/2	17 29/32	11 11/16	2
	435	394	479	31	765	390	127	-	-	1118	978	953	235	495	455	297	50
SDCD 276/MC14	18 1/8	16 1/2	19 7/8	1 7/32	33 1/8	16.737	5	-	-	47 1/4	4 13/16	40 1/4	9 7/8	19 1/2	17 29/32	13 1/8	2
	460	419	505	31	841	425	127	-	-	1200	1047	1022	251	495	455	333	50
SDCD 080	16 1/8	14 9/16	16 1/2	-	27 3/4	14.173	4 3/4	4 3/16	3 3/4	39 3/8	34 5/16	33 3/8	9 1/16	-	-	9 1/8	1 3/4
	410	370	420	-	705	360	120	106	94	1000	872	848	230	-	-	232	45
SDCD 180	17 1/8	15 1/2	17 1/2	1 7/32	30 1/8	15.354	5	4 31/32	4 1/2	44	38 1/2	37 1/2	9 1/4	-	-	11 13/16	2
	435	394	445	31	765	390	127	126	113	1118	978	953	235	-	-	300	50
SDCD 280	18 1/8	16 1/2	18 1/2	1 7/32	33 1/8	16.732	5	5 1/2	4 7/8	47 1/4	41 3/16	40 1/4	9 7/8	-	-	13 7/16	2
	460	419	470	31	841	425	127	140	124	1200	1047	1022	251	-	-	341	50
SDCD 080/MC14	16 1/8	14 9/16	17 29/32	-	27 3/4	14.173	4 3/4	-	-	39 3/8	34 5/16	33 3/8	9 1/16	20 13/32	18 21/32	9 1/8	1 3/4
	410	370	455	-	705	360	120	-	-	1000	872	848	230	518	474	232	45
SDCD 180/MC14	17 1/8	15 1/2	18 7/8	1 7/32	30 1/8	15.354	5	-	-	44	38 1/2	37 1/2	9 1/4	20 13/32	18 21/32	11 13/16	2
	435	394	479	31	765	390	127	-	-	1118	978	953	235	518	474	300	50
SDCD 280/MC14	18 1/8	16 1/2	19 7/8	1 7/32	33 1/8	16.737	5	-	-	47 1/4	41 3/16	40 1/4	9 7/8	20 13/32	18 21/32	13 7/16	2
	460	419	505	31	841	425	127	-	-	1200	1047	1022	251	518	474	341	50

NOTE:

* Dimension "X" indicates the centreline of the bearing seat in the housing is offset this distance in relation to the centreline of the housing, away from the oil sump. When oil lubrication is used the static oil level H3 must be maintained.

** Dimension "S" indicates the shaft length from the bearing centre to the end of the shaft on the locknut side, which allows adequate clearance between the shaft end and the end cover. Normally the shaft need not be any longer than required for the adapter sleeve.

For an example on how to order please see page 203.

Series SDCD 000, SDCD 100, SDCD 200, SDCD 000/MC14, SDCD 100/MC14, SDCD 200/MC14

Pillow blocks of ductile iron for bearings with cylindrical bore mounting and grease or oil lubrication

d_a 18 - 19 in

d_b 16 1/8 - 17 in

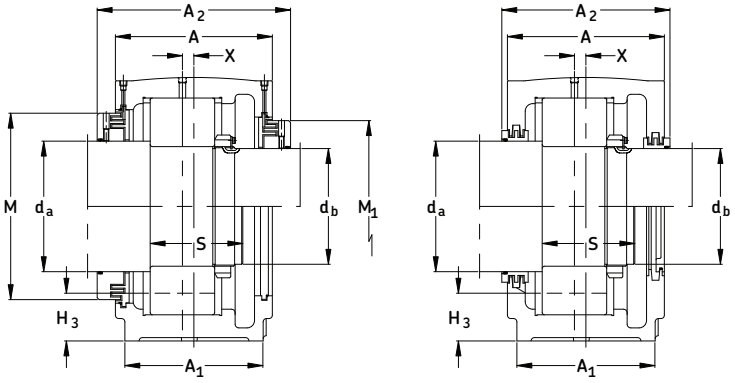

Shaft Dia. d_a/d_b	Complete Pillow Block Assembly	Housing	Seal Assemblies For Shaft Dia d_a	Seal Assemblies For Shaft Dia d_b	Bearing	Lock Nut	Lock Washer	End Cover	Fixing Ring (2 req'd)	Mass Comp
in										kg
da 18										
db 16 1/8										
	SDCD 23084	SDCD084	TS96/18	TS88/16 1/8	23084CA/W33	N 084	P 84	ETS88	FRB 10/620	989
	SDCD 23184	SDCD184	TS96/18	TS88/16 1/8	23184C/W33	N 084	P 84	ETS88	FRB 10/700	1313
	SDCD 23084/MC14D	SDCD084/MC14	TSDC92/18D	TSDC84/16 1/8 D	23084CA/W33	N 084	P 84	ASDC84	FRB 10/620	989
	SDCD 23184/MC14D	SDCD184/MC14	TSDC92/18D	TSDC84/16 1/8 D	23184CJ/W33	N 084	P 84	ASDC84	FRB 10/700	1313
da 19										
db 17	SDCD 23088	SDCD088	TS500/19	TS92/17	23088CA/W33	N 088	P 88	ETS92	FRB 10/650	989
	SDCD 23188	SDCD188	TS500/19	TS92/17	23188CA/W33	N 088	P 88	ETS92	FRB 10/720	1347
	SDCD 23088/MC14D	SDCD088/MC14	TSDC96/19D	TSDC88/17D	23088CA/W33	N 088	P 88	ASDC88	FRB 10/650	989
	SDCD 23188/MC14D	SDCD188/MC14	TSDC96/19D	TSDC88/17D	23188CA/W33	N 088	P 88	ASDC88	FRB 10/720	1347

If oil lubrication is to be used, SKF can drill and tap the two bosses for the oil level gauge and oil drain holes, if so specified on your order. Advise the type and size of the gauge you intend to use, gauges are not supplied by SKF.

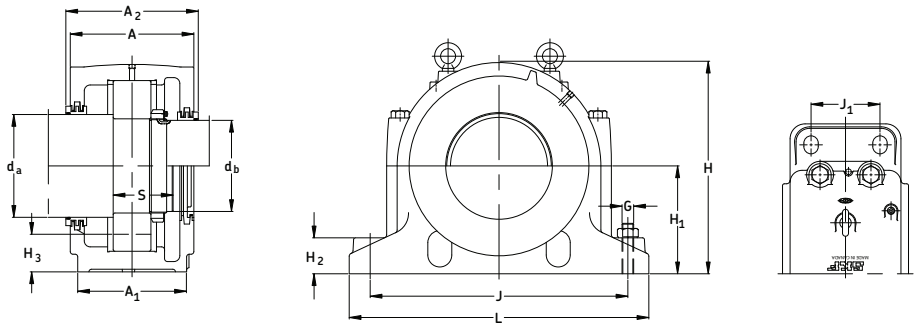

Housing No.	Dimensions							Static Oil Level									Bolts (4 req'd)
	A	A_1	A_2	X*	H	H_1	H_2	H_{3max}	H_{3min}	L	J_{max}	J_{min}	J_1	M	M_1	S**	G
	in/mm																
SDCD 084	17 1/8	15 1/2	17 1/2	-	30 1/8	15.354	5	5	4 9/16	44	38 1/2	37 1/2	9 1/4	-	-	9 5/8	2
	435	394	445	-	765	390	127	127	115	1118	978	952	235	-	-	244	50
SDCD 184	18 1/8	16 1/2	18 1/2	1 7/32	33 1/8	16.732	5	5 5/8	5 1/32	47 1/4	41 3/16	40 5/16	9 7/8	-	-	12 13/16	2
	460	419	470	31	841	425	127	143	128	1200	1046	1024	251	-	-	325	50
SDCD 084/MC14	17 1/8	15 1/2	18 7/8	-	30 1/8	15.354	5	-	-	44	38 1/2	1/2	9 1/4	21 13/32	19 1/2	9 5/8	2
	435	394	479	-	765	390	127	-	-	1118	978	952	235	544	495	244	50
SDCD 184/MC14	18 1/8	16 1/2	19 7/8	1 7/32	33 1/8	16.732	5	-	-	47 1/4	41 3/16	40 5/16	9 7/8	21 13/32	19 1/2	12 13/16	2
	460	419	505	31	841	425	127	-	-	1200	1046	1024	251	544	495	325	50
SDCD 088	17 1/8	15 1/2	17 1/2	-	30 1/8	15.354	5	4 1/2	4	44	38 1/2	37 1/2	9 1/4	-	-	9 3/4	2
	435	394	445	-	765	390	127	114	102	1118	978	952	235	-	-	248	50
SDCD 188	18 1/8	16 1/2	18 1/2	1 7/32	33 1/8	16.732	5	5 1/8	4 9/16	47 1/4	41 3/16	40 5/16	9 7/8	-	-	12 13/16	2
	460	419	470	31	841	425	127	130	115	1200	1046	1024	251	-	-	325	50
SDCD 088/MC14	17 1/8	15 1/2	18 7/8	-	30 1/8	15.354	5	-	-	44	38 1/2	37 1/2	9 1/4	22 13/32	20 13/32	9 3/4	2
	435	394	479	-	765	390	127	-	-	1118	978	952	235	569	518	248	50
SDCD 188/MC14	18 1/8	16 1/2	19 7/8	1 7/32	33 1/8	16.737	5	-	-	47 1/4	3/16	40 5/16	9 7/8	22 13/32	20 13/32	12 13/16	2
	460	419	505	31	841	425	127	-	-	1200	1046	1024	251	569	518	325	50

NOTE:

* Dimension "X" indicates the centreline of the bearing seat in the housing is offset this distance in relation to the centreline of the housing, away from the oil sump. When oil lubrication is used the static oil level H3 must be maintained.

** Dimension "S" indicates the shaft length from the bearing centre to the end of the shaft on the locknut side, which allows adequate clearance between the shaft end and the end cover. Normally the shaft need not be any longer than required for the adapter sleeve.

For an example on how to order please see page 203.

Series TY-RPA
Take-up units with top angle protected screw
d_a 1 7/16 - 2 3/16 in
(36.51 - 55.56 mm)
Travel 12 - 36 in
(304.8 - 914.4 mm)

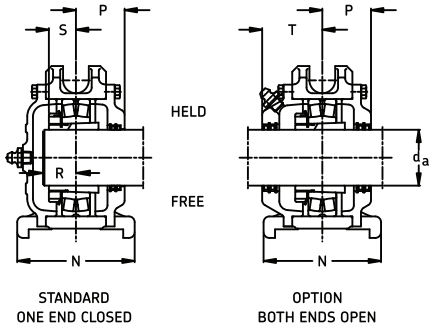

Shaft Dia. da	Designation Unit Complete	Housing	Frame	Travel Code	Bearing	Adapter Sleeve	Fixing Ring (2 req'd)	A	B	C	D	E
in/mm				in/mm				in/mm				
1 7/16	TY 107 RPA-12	TY 107 R	PA 12-1	12	22209 EK	HA 309	SR 9-9	3 15/16	28 1/2	3 5/8	3/8	26 1/2
36.51				304.8				100.0	723.9	92.1	9.5	673.1
1 7/16	TY 107 RPA-18	TY 107 R	PA 18-1	18	22209 EK	HA 309	SR 9-9	3 15/16	34 1/2	3 5/8	3/8	32 1/2
36.51				457.2				100.0	876.3	92.1	9.5	825.5
1 7/16	TY 107 RPA-24	TY 107 R	PA 24-1	24	22209 EK	HA 309	SR 9-9	3 15/16	40 1/2	3 5/8	3/8	38 1/2
36.51				609.6				100.0	1028.7	92.1	9.5	977.9
1 15/16	TY 115 RPA-12	TY 115 R	PA 12-2	12	22211 EK	HA 311	SR 11-0	4 3/16	29 1/2	3 5/8	3/8	27 1/2
49.21				304.8				106.4	749.3	92.1	9.5	698.5
1 15/16	TY 115 RPA-18	TY 115 R	PA 18-2	18	22211 EK	HA 311	SR 11-0	4 3/16	35 1/2	3 5/8	3/8	33 1/2
49.21				457.2				106.4	901.7	92.1	9.5	850.9
1 15/16	TY 115 RPA-24	TY 115 R	PA 24-2	24	22211 EK	HA 311	SR 11-0	4 3/16	41 1/2	3 5/8	3/8	39 1/2
49.21				609.6				106.4	1054.1	92.1	9.5	1003.3
2 3/16	TY 203 RPA-12	TY 203 R	PA 12-4	12	22213 EK	HA 313	SR 13-0	5 1/8	32 1/2	4 5/8	1/2	30 1/2
55.56				304.8				130.2	825.5	117.5	12.7	774.7
2 3/16	TY 203 RPA-18	TY 203 R	PA 18-4	18	22213 EK	HA 313	SR 13-0	5 1/8	38 1/2	4 5/8	1/2	36 1/2
55.56				457.2				130.2	977.9	117.5	12.7	927.1
2 3/16	TY 203 RPA-24	TY 203 R	PA 24-4	24	22213 EK	HA 313	SR 13-0	5 1/8	44 1/2	4 5/8	1/2	42 1/2
55.56				609.6				130.2	1130.3	117.5	12.7	1079.5
2 3/16	TY 203 RPA-30	TY 203 R	PA 30-4	30	22213 EK	HA 313	SR 13-0	5 1/8	50 1/2	4 5/8	1/2	54 1/2
55.56				762.0				130.2	1282.7	117.5	12.7	1384.3
2 3/16	TY 203 RPA-36	TY 203 R	PA 36-4	36	22213 EK	HA 313	SR 13-0	5 1/8	56 1/2	4 5/8	1/2	5 1/2
55.56				914.4				130.2	1435.1	117.5	12.7	139.7

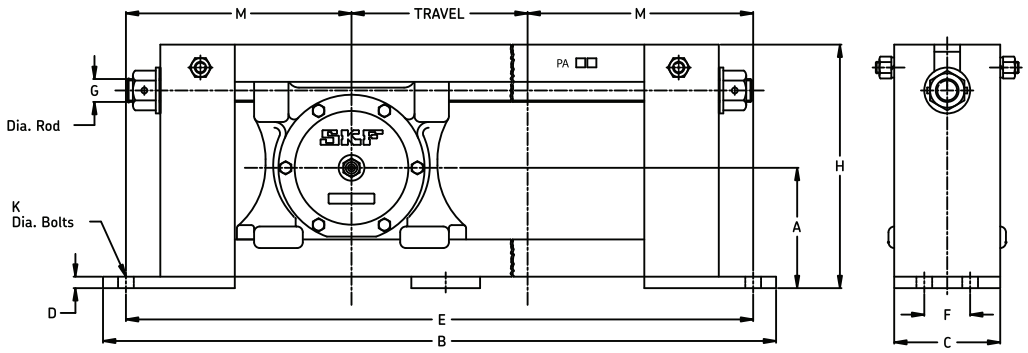

										Take-up Unit Both Ends Open	
F	**G**	**H**	**K**	**M**	**N**	**P**	**R**	**S**	**T**		**Mass**
in/mm											**lb/kg**
-	3/4	8 1/4	5/8	7 1/4	4 1/8	1 3/4	1 1/16	31/32	2 3/8	TY 107R PA-12-26	42.0
-	19.0	209.6	15.9	184.2	104.8	44.5	27.0	24.6	60.3		19.0
-	3/4	8 1/4	5/8	7 1/4	4 1/8	1 3/4	1 1/16	31/32	2 3/8	TY 107R PA-18-26	48.0
-	19.0	209.6	15.9	184.2	104.8	44.5	27.0	24.6	60.3		21.8
-	3/4	8 1/4	5/8	7 1/4	4 1/8	1 3/4	1 1/16	31/32	2 3/8	TY 107R PA-24-26	54.0
-	19.0	209.6	15.9	184.2	104.8	44.5	27.0	24.6	60.3		24.5
-	3/4	8 5/8	5/8	7 3/4	4 1/8	1 15/16	1 3/16	1 1/16	2 9/16	TY 115R PA-12-26	51.0
-	19.0	219.1	15.9	196.9	104.8	49.2	30.2	27.0	65.1		23.1
-	3/4	8 5/8	5/8	7 3/4	4 1/8	1 15/16	1 3/16	1 1/16	2 9/16	TY 115R PA-18-26	55.0
-	19.0	219.1	15.9	196.9	104.8	49.2	30.2	27.0	65.1		24.9
-	3/4	8 5/8	5/8	7 3/4	4 1/8	1 15/16	1 3/16	1 1/16	2 9/16	TY 115R PA-24-26	63.0
-	19.0	219.1	15.9	196.9	104.8	49.2	30.2	27.0	65.1		28.6
2	1	10 5/8	5/8	9 1/4	5 1/8	2 1/8	1 3/8	1 1/4	2 5/8	TY 203R PA-12-26	85.0
50.8	25.4	269.9	15.9	235.0	130.2	54.0	34.9	31.8	66.7		38.5
2	1	10 5/8	5/8	9 1/4	5 1/8	2 1/8	1 3/8	1 1/4	2 5/8	TY 203R PA-18-26	96.0
50.8	25.4	269.9	15.9	235.0	130.2	54.0	34.9	31.8	66.7		43.5
2	1	10 5/8	5/8	9 1/4	5 1/8	2 1/8	1 3/8	1 1/4	2 5/8	TY 203R PA-24-26	110.0
50.8	25.4	269.9	15.9	235.0	130.2	54.0	34.9	31.8	66.7		49.9
2	1	10 5/8	5/8	9 1/4	5 1/8	2 1/8	1 3/8	1 1/4	2 5/8	TY 203R PA-30-26	120.0
50.8	25.4	269.9	15.9	235.0	130.2	54.0	34.9	31.8	66.7		54.4
2	1	10 5/8	5/8	9 1/4	5 1/8	2 1/8	1 3/8	1 1/4	2 5/8	TY 203R PA-36-26	130.0
50.8	25.4	269.9	15.9	235.0	130.2	54.0	34.9	31.8	66.7		59.0

Series TY-RPA
Take-up units with top angle protected screw
d_a 2 7/16 - 3 7/16 in
(61.91 - 87.31 mm)
Travel 12 - 36 in
(304.8 - 914.4 mm)

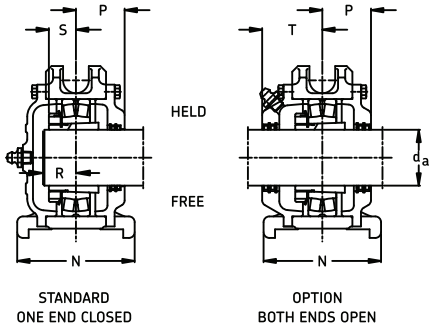

Shaft Dia. da	Designation Unit Complete	Housing	Frame	Travel Code	Bearing	Adapter Sleeve	Fixing Ring (2 req'd)	A	B	C	D	E
in/mm				in/mm				in/mm				
2 7/16	TY 207 RPA-12	TY 207 R	PA 12-4	12	22215 EK	HA 315	SR 15-0	5 1/8	32 1/2	4 5/8	1/2	30 1/2
61.91				304.8				130.2	825.5	117.5	12.7	774.7
2 7/16	TY 207 RPA-18	TY 207 R	PA 18-4	18	22215 EK	HA 315	SR 15-0	5 1/8	38 1/2	4 5/8	1/2	36 1/2
61.91				457.2				130.2	977.9	117.5	12.7	927.1
2 7/16	TY 207 RPA-24	TY 207 R	PA 24-4	24	22215 EK	HA 315	SR 15-0	5 1/8	44 1/2	4 5/8	1/2	42 1/2
61.91				609.6				130.2	1130.3	117.5	12.7	1079.5
2 7/16	TY 207 RPA-30	TY 207 R	PA 30-4	30	22215 EK	HA 315	SR 15-0	5 1/8	50 1/2	4 5/8	1/2	48 1/2
61.91				762.0				130.2	1282.7	117.5	12.7	1231.9
2 7/16	TY 207 RPA-36	TY 207 R	PA 36-4	36	22215 EK	HA 315	SR 15-0	5 1/8	56 1/2	4 5/8	1/2	54 1/2
61.91				914.4				130.2	1435.1	117.5	12.7	1384.3
2 15/16	TY 215 RPA-12	TY 215 R	PA 12-5	12	22217 EK	HA 317	SR 17-14	5 5/8	34 1/2	4 5/8	1/2	32.0
74.61				304.8				142.9	876.3	117.5	12.7	812.8
2 15/16	TY 215 RPA-18	TY 215 R	PA 18-5	18	22217 EK	HA 317	SR 17-14	5 5/8	40 1/2	4 5/8	1/2	38.0
74.61				457.2				142.9	1028.7	117.5	12.7	965.2
2 15/16	TY 215 RPA-24	TY 215 R	PA 24-5	24	22217 EK	HA 317	SR 17-14	5 5/8	46 1/2	4 5/8	1/2	44.0
74.61				609.6				142.9	1181.1	117.5	12.7	1117.6
2 15/16	TY 215 RPA-30	TY 215 R	PA 30-5	30	22217 EK	HA 317	SR 17-14	5 5/8	52 1/2	4 5/8	1/2	50.0
74.61				762.0				142.9	1333.5	117.5	12.7	1270.0
2 15/16	TY 215 RPA-36	TY 215 R	PA 36-5	36	22217 EK	HA 317	SR 17-14	5 5/8	58 1/2	4 5/8	1/2	56.0
74.61				914.4				142.9	1485.9	117.5	12.7	1422.4
3 7/16	TY 307 RPA-12	TY 307 R	PA 12-6	12	22220 EK	HA 320	SR 20-17	7	38 1/2	5 3/4	1/2	36.0
87.31				304.8				177.8	977.9	146.1	12.7	914.4
3 7/16	TY 307 RPA-18	TY 307 R	PA 18-6	18	22220 EK	HA 320	SR 20-17	7	44 1/2	5 3/4	1/2	42.0
87.31				457.2				177.8	1130.3	146.1	12.7	1066.8
3 7/16	TY 307 RPA-24	TY 307 R	PA 24-6	24	22220 EK	HA 320	SR 20-17	7	50 1/2	5 3/4	1/2	48.0
87.31				609.6				177.8	1282.7	146.1	12.7	1219.2
3 7/16	TY 307 RPA-30	TY 307 R	PA 30-6	30	22220 EK	HA 320	SR 20-17	7	56 1/2	5 3/4	1/2	54.0
87.31				762.0				177.8	1435.1	146.1	12.7	1371.6
3 7/16	TY 307 RPA-36	TY 307 R	PA 36-6	36	22220 EK	HA 320	SR 20-17	7	62 1/2	5 3/4	1/2	60.0
87.31				914.4				177.8	1587.5	146.1	12.7	1524.0

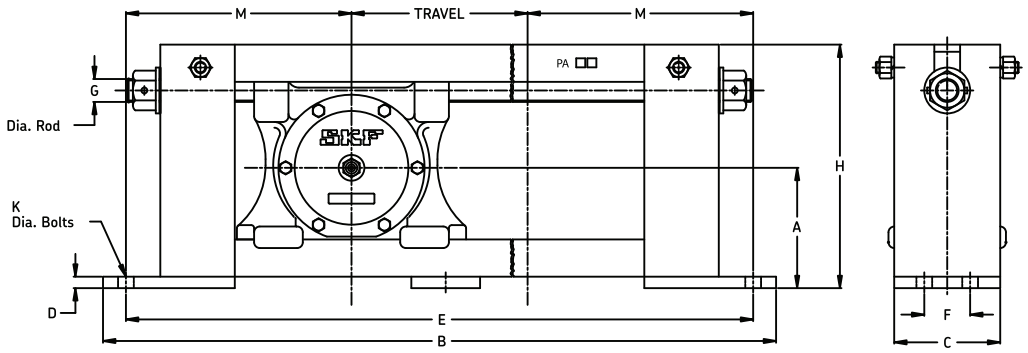

										Take-up Unit Both Ends Open	
F	G	H	K	M	N	P	R	S	T		Mass
in/mm											lb/kg
2	1	10 5/8	5/8	9 1/4	5 1/8	2 1/8	1 7/16	1 9/32	2 5/8	TY 207R PA-12-33	92.0
50.8	25.4	269.9	15.9	235.0	130.2	54.0	36.5	32.5	66.7		41.7
2	1	10 5/8	5/8	9 1/4	5 1/8	2 1/8	1 7/16	1 9/32	2 5/8	TY 207R PA-18-33	105.0
50.8	25.4	269.9	15.9	235.0	130.2	54.0	36.5	32.5	66.7		47.6
2	1	10 5/8	5/8	9 1/4	5 1/8	2 1/8	1 7/16	1 9/32	2 5/8	TY 207R PA-24-33	110.0
50.8	25.4	269.9	15.9	235.0	130.2	54.0	36.5	32.5	66.7		49.9
2	1	10 5/8	5/8	9 1/4	5 1/8	2 1/8	1 7/16	1 9/32	2 5/8	TY 207R PA-30-33	120.0
50.8	25.4	269.9	15.9	235.0	130.2	54.0	36.5	32.5	66.7		54.4
2	1	10 5/8	5/8	9 1/4	5 1/8	2 1/8	1 7/16	1 9/32	2 5/8	TY 207R PA-36-33	130.0
50.8	25.4	269.9	15.9	235.0	130.2	54.0	36.5	32.5	66.7		59.0
2	1 1/8	11 3/4	3/4	10	5 5/8	2 1/2	1 9/16	1 13/32	2 15/16	TY 215R PA-12-33	100
50.8	28.6	298.5	19.0	254.0	142.9	63.5	39.7	35.7	74.6		45.4
2	1 1/8	11 3/4	3/4	10	5 5/8	2 1/2	1 9/16	1 13/32	2 15/16	TY 215R PA-18-33	115
50.8	28.6	298.5	19.0	254.0	142.9	63.5	39.7	35.7	74.6		52.2
2	1 1/8	11 3/4	3/4	10	5 5/8	2 1/2	1 9/16	1 13/32	2 15/16	TY 215R PA-24-33	130
50.8	28.6	298.5	19.0	254.0	142.9	63.5	39.7	35.7	74.6		59.0
2	1 1/8	11 3/4	3/4	10	5 5/8	2 1/2	1 9/16	1 13/32	2 15/16	TY 215R PA-30-33	140
50.8	28.6	298.5	19.0	254.0	142.9	63.5	39.7	35.7	74.6		63.5
2	1 1/8	11 3/4	3/4	10	5 5/8	2 1/2	1 9/16	1 13/32	2 15/16	TY 215R PA-36-33	155
50.8	28.6	298.5	19.0	254.0	142.9	63.5	39.7	35.7	74.6		70.3
2 1/2	1 1/4	14 1/2	3/4	12	6 7/8	2 1/2	1 15/16	1 3/4	3 7/16	TY 307R PA-12-33	155
63.5	31.8	368.3	19.0	304.8	174.6	63.5	49.2	44.5	87.3		70.3
2 1/2	1 1/4	14 1/2	3/4	12	6 7/8	2 1/2	1 15/16	1 3/4	3 7/16	TY 307R PA-18-33	175
63.5	31.8	368.3	19.0	304.8	174.6	63.5	49.2	44.5	87.3		79.4
2 1/2	1 1/4	14 1/2	3/4	12	6 7/8	2 1/2	1 15/16	1 3/4	3 7/16	TY 307R PA-24-33	190
63.5	31.8	368.3	19.0	304.8	174.6	63.5	49.2	44.5	87.3		86.2
2 1/2	1 1/4	14 1/2	3/4	12	6 7/8	2 1/2	1 15/16	1 3/4	3 7/16	TY 307R PA-30-33	205
63.5	31.8	368.3	19.0	304.8	174.6	63.5	49.2	44.5	87.3		93.0
2 1/2	1 1/4	14 1/2	3/4	12	6 7/8	2 1/2	1 15/16	1 3/4	3 7/16	TY 307R PA-36-33	220
63.5	31.8	368.3	19.0	304.8	174.6	63.5	49.2	44.5	87.3		99.8

Series TY-RPA
Take-up units with top angle protected screw
d_a 3 15/16 - 4 15/16 in
(100.01 - 125.41 mm)
Travel 12 - 36 in
(304.8 - 914.4 mm)

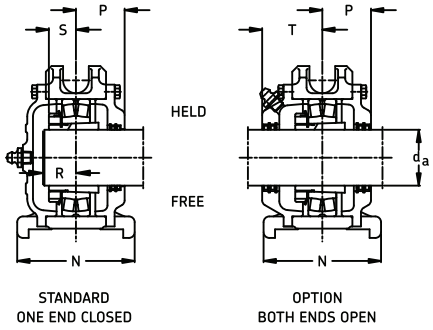

Shaft Dia. da	Designation Unit Complete	Housing	Frame	Travel Code	Bearing	Adapter Sleeve	Fixing Ring (2 req'd)	A	B	C	D	E
in/mm				in/mm				in/mm				
3 15/16	TY 315 RPA-12	TY 315 R	PA 12-6	12	22222 EK	H 322	SR 22-19	7	38 1/2	5 3/4	1/2	36.0
100.01				304.8				177.8	977.9	146.1	12.7	914.4
3 15/16	TY 315 RPA-18	TY 315 R	PA 18-6	18	22222 EK	H 322	SR 22-19	7	44 1/2	5 3/4	1/2	42.0
100.01				457.2				177.8	1130.3	146.1	12.7	1066.8
3 15/16	TY 315 RPA-24	TY 315 R	PA 24-6	24	22222 EK	H 322	SR 22-19	7	50 1/2	5 3/4	1/2	48.0
100.01				609.6				177.8	1282.7	146.1	12.7	1219.2
3 15/16	TY 315 RPA-30	TY 315 R	PA 30-6	30	22222 EK	H 322	SR 22-19	7	56 1/2	5 3/4	1/2	54.0
100.01				762.0				177.8	1435.1	146.1	12.7	1371.6
4 7/16	TY 407 RPA-12	TY 407 R	PA 12-7	12	22226 EK	HA 3126	SR 26-0	8	38 1/2	5 3/4	1/2	36.0
112.71				304.8				203.2	977.9	146.1	12.7	914.4
4 7/16	TY 407 RPA-18	TY 407 R	PA 18-7	18	22226 EK	HA 3126	SR 26-0	8	44 1/2	5 3/4	1/2	42.0
112.71				457.2				203.2	1130.3	146.1	12.7	1066.8
4 7/16	TY 407 RPA-24	TY 407 R	PA 24-7	24	22226 EK	HA 3126	SR 26-0	8	50 1/2	5 3/4	1/2	48.0
112.71				609.6				203.2	1282.7	146.1	12.7	1,219.2
4 7/16	TY 407 RPA-30	TY 407 R	PA 30-7	30	22226 EK	HA 3126	SR 26-0	8	56 1/2	5 3/4	1/2	54.0
112.71				762.0				203.2	1435.1	146.1	12.7	1,371.6
4 15/16	TY 415 RPA-12	TY 415 R	PA 12-8	12	22228CCK/W33	HA 3128	35072-28	8 1/2	48 1/2	6 7/8	5/8	44 1/2
125.41				304.8				215.9	1231.9	174.6	15.9	1,130.3
4 15/16	TY 415 RPA-18	TY 415 R	PA 18-8	18	22228CCK/W33	HA 3128	35072-28	8 1/2	54 1/2	6 7/8	5/8	50 1/2
125.41				457.2				215.9	1384.3	174.6	15.9	1,282.7
4 15/16	TY 415 RPA-24	TY 415 R	PA 24-8	24	22228CCK/W33	HA 3128	35072-28	8 1/2	60 1/2	6 7/8	5/8	56 1/2
125.41				609.6				215.9	1536.7	174.6	15.9	1,435.1
4 15/16	TY 415 RPA-30	TY 415 R	PA 30-8	30	22228CCK/W33	HA 3128	35072-28	8 1/2	66 1/2	6 7/8	5/8	62 1/2
125.41				762.0				215.9	1689.1	174.6	15.9	1,587.5

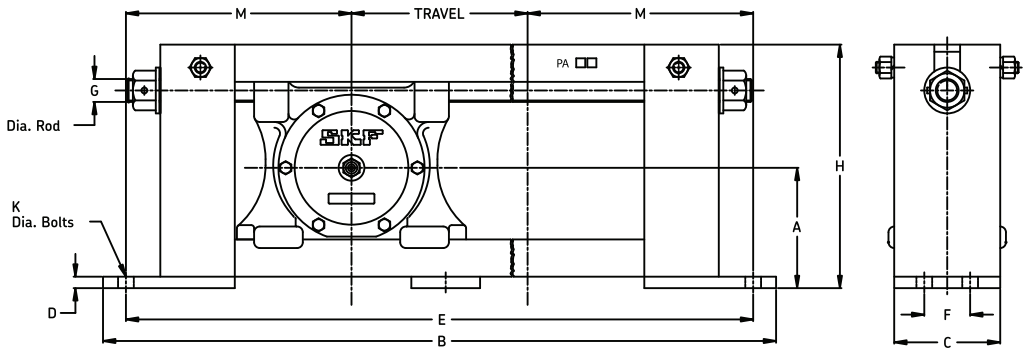

										Take-up Unit Both Ends Open	
F	G	H	K	M	N	P	R	S	T		Mass
in/mm											lb/kg
2 1/2	1 1/4	14 1/2	3/4	12	6 7/8	2 7/8	2 1/8	1 31/32	3 13/16	TY 315R PA-12-39	155
63.5	31.8	368.3	19.0	304.8	174.6	73.0	54.0	50.0	96.8		70.3
2 1/2	1 1/4	14 1/2	3/4	12	6 7/8	2 7/8	2 1/8	1 31/32	3 13/16	TY 315R PA-18-39	170
63.5	31.8	368.3	19.0	304.8	174.6	73.0	54.0	50.0	96.8		77.1
2 1/2	1 1/4	14 1/2	3/4	12	6 7/8	2 7/8	2 1/8	1 31/32	3 13/16	TY 315R PA-24-39	190
63.5	31.8	368.3	19.0	304.8	174.6	73.0	54.0	50.0	96.8		86.2
2 1/2	1 1/4	14 1/2	3/4	12	6 7/8	2 7/8	2 1/8	1 31/32	3 13/16	TY 315R PA-30-39	205
63.5	31.8	368.3	19.0	304.8	174.6	73.0	54.0	50.0	96.8		93.0
2 1/2	1 3/8	16 3/4	3/4	12	7	3 1/16	2 1/2	2 9/32	4 1/4	TY 407R PA-12-32	270
63.5	34.9	425.5	19.0	304.8	177.8	77.8	63.5	57.9	108.0		122.4
2 1/2	1 3/8	16 3/4	3/4	12	7	3 1/16	2 1/2	2 9/32	4 1/4	TY 407R PA-18-32	280
63.5	34.9	425.5	19.0	304.8	177.8	77.8	63.5	57.9	108.0		127.0
2 1/2	1 3/8	16 3/4	3/4	12	7	3 1/16	2 1/2	2 9/32	4 1/4	TY 407 RPA-24-32	290
63.5	34.9	425.5	19.0	304.8	177.8	77.8	63.5	57.9	108.0		132
2 1/2	1 3/8	16 3/4	3/4	12	7	3 1/16	2 1/2	2 9/32	4 1/4	TY 407 RPA-30-32	300
63.5	34.9	425.5	19.0	304.8	177.8	77.8	63.5	57.9	108.0		136
3 3/8	1 3/4	19 1/8	1	16 1/4	7 1/8	3 5/8	2 5/8	2 13/32	4 1/8	TY 415 RPA-12-32	450
85.7	44.5	485.8	25.4	412.8	181.0	92.1	66.7	61.1	104.8		204
3 3/8	1 3/4	19 1/8	1	16 1/4	7 1/8	3 5/8	2 5/8	2 13/32	4 1/8	TY 415 RPA-18-32	470
85.7	44.5	485.8	25.4	412.8	181.0	92.1	66.7	61.1	104.8		213
3 3/8	1 3/4	19 1/8	1	16 1/4	7 1/8	3 5/8	2 5/8	2 13/32	4 1/8	TY 415 RPA-24-32	490
85.7	44.5	485.8	25.4	412.8	181.0	92.1	66.7	61.1	104.8		222
3 3/8	1 3/4	19 1/8	1	16 1/4	7 1/8	3 5/8	2 5/8	2 13/32	4 1/8	TY 415 RPA-30-32	510
85.7	44.5	485.8	25.4	412.8	181.0	92.1	66.7	61.1	104.8		231

Series TY-RPA
Take-up units with top angle protected screw d_a 5 7/16 - 5 15/16 in (138.11 - 150.81 mm) Travel 12 - 30 in (304.8 - 762.0 mm)

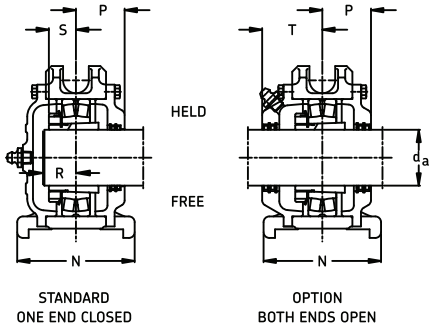

Shaft Dia. da	Designation Unit Complete	Housing	Frame	Travel Code	Bearing	Adapter Sleeve	Fixing Ring (2 req'd)	A	B	C	D	E
in/mm				in/mm				in/mm				
5 7/16	TY 507 RPA-12	TY 507 R	PA 12-9	12	22232CCK/W33	HA 3132	35072-32	9 1/2	52 1/2	8 3/4	3/4	48 1/2
138.11				304.8				241.3	1333.5	222.3	19.0	1,231.9
5 7/16	TY 507 RPA-18	TY 507 R	PA 18-9	18	22232CCK/W33	HA 3132	35072-32	9 1/2	58 1/2	8 3/4	3/4	54 1/2
138.11				457.2				241.3	1485.9	222.3	19.0	1,384.3
5 7/16	TY 507 RPA-24	TY 507 R	PA 24-9	24	22232CCK/W33	HA 3132	35072-32	9 1/2	64 1/2	8 3/4	3/4	60 1/2
138.11				609.6				241.3	1638.3	222.3	19.0	1,536.7
5 7/16	TY 507 RPA-30	TY 507 R	PA 30-9	30	22232CCK/W33	HA 3132	35072-32	9 1/2	70 1/2	8 3/4	3/4	66 1/2
138.11				762.0				241.3	1790.7	222.3	19.0	1,689.1
5 15/16	TY 515 RPA-12	TY 515 R	PA 12-10	12	22234CCK/W33	HA 3134	35072-34	10 1/2	57 1/2	9 1/8	5/8	54.0
150.81				304.8				266.7	1460.5	231.8	15.9	1,371.6
5 15/16	TY 515 RPA-18	TY 515 R	PA 18-10	18	22234CCK/W33	HA 3134	35072-34	10 1/2	63 1/2	9 1/8	5/8	60.0
150.81				457.2				266.7	1612.9	231.8	15.9	1,524.0
5 15/16	TY 515 RPA-24	TY 515 R	PA 24-10	24	22234CCK/W33	HA 3134	35072-34	10 1/2	69 1/2	9 1/8	5/8	66.0
150.81				609.6				266.7	1765.3	231.8	15.9	1,676.4
5 15/16	TY 515 RPA-30	TY 515 R	PA 30-10	30.0	22234CCK/W33	HA 3134	35072-34	10 1/2	75 1/2	9 1/8	5/8	72.0
150.81				762.0				266.7	1917.7	231.8	15.9	1,828.8

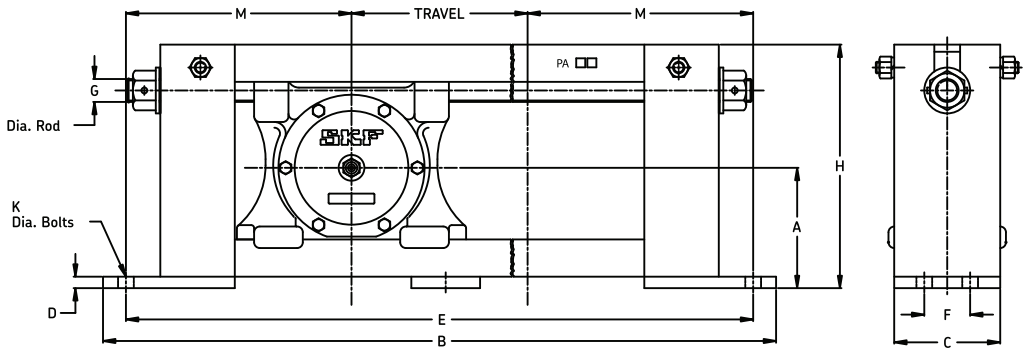

										Take-up Unit Both Ends Open	
F	G	H	K	M	N	P	R	S	T		Mass
in/mm											lb/kg
5 1/2	2	21 7/8	1 1/8	18 1/4	10 1/8	3 15/16	3	2 25/32	3 15/16	TY 507 RPA-12-29	615
139.7	50.8	555.6	28.6	463.6	257.2	100.0	76.2	70.6	100.0		279
5 1/2	2	21 7/8	1 1/8	18 1/4	10 1/8	3 15/16	3	2 25/32	3 15/16	TY 507 RPA-18-29	640
139.7	50.8	555.6	28.6	463.6	257.2	100.0	76.2	70.6	100.0		290
5 1/2	2	21 7/8	1 1/8	18 1/4	10 1/8	3 15/16	3	2 25/32	3 15/16	TY 507 RPA-24-29	132
139.7	50.8	555.6	28.6	463.6	257.2	100.0	76.2	70.6	100.0		60
5 1/2	2	21 7/8	1 1/8	18 1/4	10 1/8	3 15/16	3	2 25/32	3 15/16	TY 507 RPA-30-29	690
139.7	50.8	555.6	28.6	463.6	257.2	100.0	76.2	70.6	100.0		313
6	2	23 3/16	1 1/4	21	10 1/8	4 3/16	3 1/8	2 15/16	4 13/16	TY 515 RPA-12-33	850
152.4	50.8	589.0	31.8	533.4	257.2	106.4	79.4	74.6	122.2		385
6	2	23 3/16	1 1/4	21	10 1/8	4 3/16	3 1/8	2 15/16	4 13/16	TY 515 RPA-18-33	890
152.4	50.8	589.0	31.8	533.4	257.2	106.4	79.4	74.6	122.2		404
6	2	23 3/16	1 1/4	21	10 1/8	4 3/16	3 1/8	2 15/16	4 13/16	TY 515 RPA-24-33	930
152.4	50.8	589.0	31.8	533.4	257.2	106.4	79.4	74.6	122.2		422
6	2	23 3/16	1 1/4	21	10 1/8	4 3/16	3 1/8	2 15/16	4 13/16	TY 515 RPA-30-33	970
152.4	50.8	589.0	31.8	533.4	257.2	106.4	79.4	74.6	122.2		440

Series TU
Take-up frames for pillow blocks housing sizes 508 to 528
Travel 12 - 36 in (304.8 - 914.4mm)

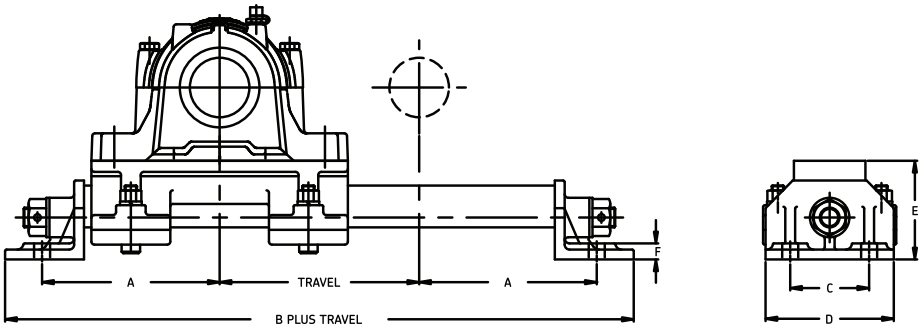

Frame Number	Basic Pillow Block Housing Number SAF / SNL / SAFD	A	B	C	D	E	F	Frame Bolt Dia. (4 req'd)
		in/mm						
TU-1	508, 509, 510, 607, 608	6 1/2	15 1/2	3 3/4	5 1/2	3 7/8	5/8	1/2
		165.1	393.7	95.3	139.7	98.4	16	12
TU-2	511, 512, 609, 610	7 1/2	17 1/2	3 3/4	5 1/2	4	5/8	1/2
		190.5	444.5	95.3	139.7	101.6	16	12
TU-3	513, 515, 611, 612	8 1/4	20	4	6 1/2	4 7/8	13/16	5/8
		209.6	508.0	101.6	165.1	123.8	21	16
TU-4	516, 517, 613	9 1/8	22	4	6 1/2	5	13/16	3/4
		231.8	558.8	101.6	165.1	127.0	21	20
TU-5	518, 615	9 3/4	23	5	7 1/2	5 1/4	3/4	3/4
		247.7	584.2	127.0	190.5	133.4	19	20
TU-6	520, 617	10 3/4	24 3/4	5	7 1/2	5 1/2	3/4	3/4
		273.1	628.7	127.0	190.5	139.7	19	20
TU-7	522, 524, 619, 620	11 1/2	26	6 1/2	9	6	1	3/4
		292.1	660.4	165.1	228.6	152.4	25	20
TU-8	526	12 1/2	28	6 1/2	9	6	1	3/4
		317.5	711.2	165.1	228.6	152.4	25	20
TU-8 spec.	528	13 1/4	29 1/2	6 1/2	9	6	1	3/4
		336.6	749.3	165.1	228.6	152.4	25	20

Note: The above frames are available with a length of travel of 12, 24 and 36 inches (304.8 - 914.4 mm). Frames with other lengths of travel may be supplied on special order. When ordering, insert the travel required under the frame number, i.e. TU-2/24. Unless specified otherwise, TU frames are supplied with mounting bolts and nuts for pillow blocks with two-bolt mounting. If four bolt mounting is required, studs and nuts will be supplied upon request.

Notes

Solid Type Steel Pillow Blocks
d_a 1 15/16 - 3 7/16 in

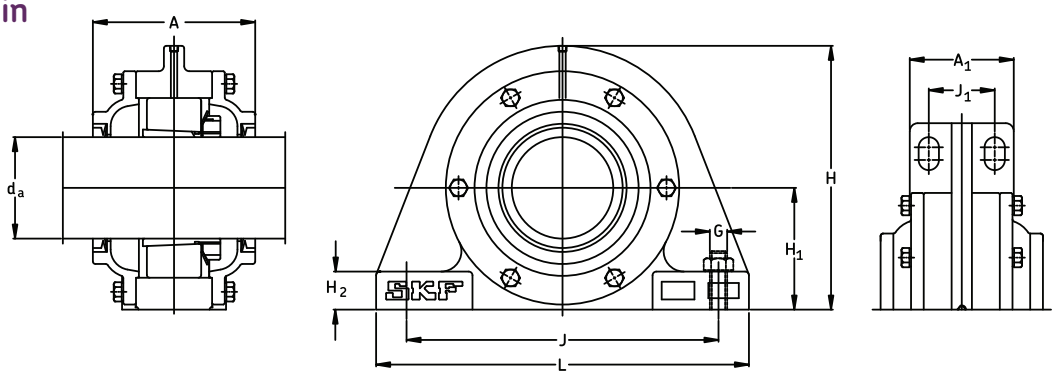

Shaft Dia. da	Complete Pillow Block Assembly	Housing	V-Ring Seal	Bearing	Adapter Sleeve	Fixing Rings Designation	Qty.	Mass Complete	
in								lb	kg
1 15/16	120-22611	120-611	400500	22311 EK	HA 2311	FRB 4/120	2	24	10.9
2 3/16	120-22513	120-513	400500	22213EK	HA 313	FRB 10/120	2	30	13.6
2 7/16	130-22515	130-515	400600	22215 EK	HA 315	FRB 8/130	2	39	17.7
2 7/16	160-22615	160-615	400600	22315 EK	HA 2315	FRB 5/160	2	77	34.9
2 15/16	150-22517	150-517	400750	22217 EK	HA 317	FRB 9/150	2	52	23.6
2 15/16	180-22617	180-617	400750	22317 EK	HA 2317	FRB 5/180	2	100	45.4
3 3/16	160-22518	160-518	400800	22218 EK	HA 318	FRB 10/160	2	70	31.7
3 3/16	160-23518	160-518	400800	23218CCK/W33	HA 2318	FRB 5/160	2	74	33.6
3 7/16	180-22520	180-520	400900	22220EK	HA 320	FRB 10/180	2	95	43.1
3 7/16	180-23520	180-520	400900	23220CCK/W33	HA 2320	FRB 5/180	2	99	44.9

How to order:

When you order one 200-22522 you will receive a package containing the following:

1 - 200-520 solid steel housing

2 - V-ring CR 401000

2 - open end covers

1 - bearing SKF 22222 EK

1 - adapter sleeve H 322

If your order specifies "HELD" or "FIXED" bearing you will receive 2 fixing (locating or stabilizing) rings FRB 13.5/200. Not more than one bearing on each shaft should be "HELD".

If your order specifies "ONE END CLOSED" you will receive one blind end cover in place of the open end cover and v-ring 401000.

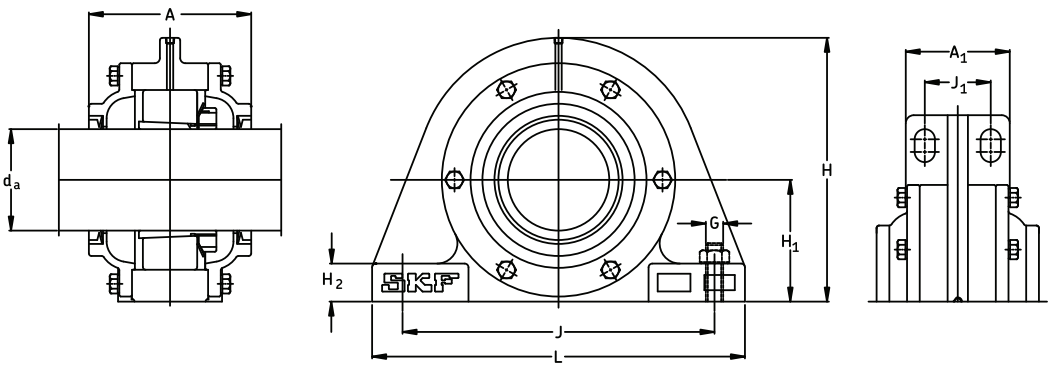

Housing No.	A	A_1	H	H_1	H_2	J	J_1	L	Bolt dia. (4 req'd) G
	in/mm								
120-611	4 7/16	3 1/8	6 1/2	3.000	1	8 13/16	2	11	1/2
	112.7	79.4	165.1	76.2	25.4	223.8	50.8	279.4	12
120-513	4 7/16	3 1/8	6 1/2	3.000	1	8 13/16	2	11	1/2
	112.7	79.4	165.1	76.2	25.4	223.8	50.8	279.4	12
130-515	4 3/4	3 1/8	7 1/4	3.250	1	9 1/8	2	11 1/4	5/8
	120.7	79.4	184.2	82.6	25.4	231.8	50.8	285.8	16
160-615	5 7/8	4	8 3/4	4.000	1 1/4	11	2 1/4	13 3/4	5/8
	149.2	101.6	222.3	101.6	31.8	279.4	57.2	349.3	16
150-517	5	4	8	3.750	1	10	2 1/8	12 1/2	5/8
	127.0	101.6	203.2	95.3	25.4	254.0	54.0	317.5	16
180-617	6	4 3/8	10 1/4	4.500	1 1/2	12 3/8	2 3/8	15 1/4	3/4
	152.4	111.1	260.4	114.3	38.1	314.3	60.3	387.4	20
160-518	5 7/8	4	8 3/4	4.000	1 1/4	11	2 1/4	13 3/4	5/8
	149.2	101.6	222.3	101.6	31.8	279.4	57.2	349.3	16
180-520	6	4 3/8	10 1/4	4.500	1 1/2	12 3/8	2 3/8	15 1/4	3/4
	152.4	111.1	260.4	114.3	38.1	314.3	60.3	387.4	20

Solid Type Steel Pillow Blocks
d_a 3 15/16 - 6 15/16 in

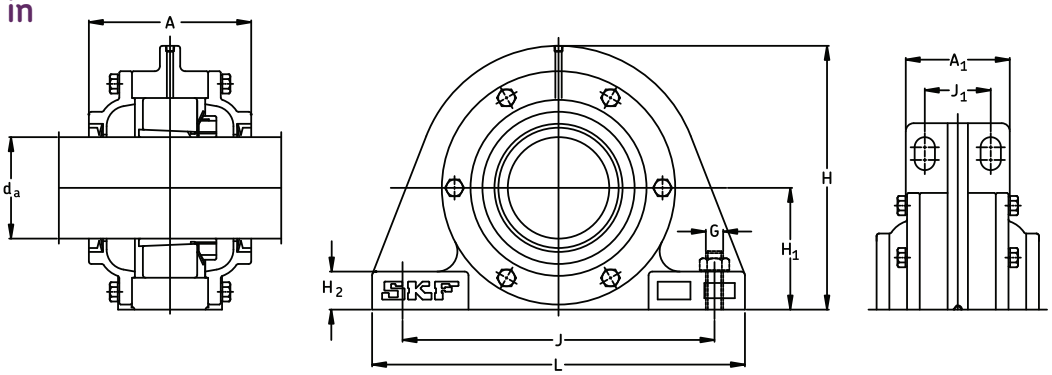

Shaft Dia. da	Complete Pillow Block Assembly	Housing	V-Ring Seal	Bearing	Adapter Sleeve	Fixing Rings Designation	Qty.	Mass Complete	
in								lb	kg
3 15/16	200-22522	200-522	401000	22222 EK	H 322	FRB 13.5/200	2	110	49.9
3 15/16	200-23522	200-522	401000	23222CCK/W33	H 2322	FRB 5.1/200	2	112	50.8
4 3/16	215-22524	215-524	401100	22224 EK	HA 3124	FRB 14/215	2	136	61.7
4 7/16	230-22526	230-526	401100	22226 EK	HA 3126	FRB 13/230	2	178	80.7
4 7/16	230-23526	230-526	401100	23226CCK/W33	HA 2326	FRB 5/230	2	188	85.3
4 15/16	250-22528	250-528	401300	22228CCK/W33	HA 3128	FRB 15/250	2	202	91.6
4 15/16	250-23528	250-528	401300	23228CCK/W33	HA 2328	FRB 5/250	2	215	97.5
5 7/16	290-22532	290-532	401400	22232CCK/W33	HA 3132	FRB 17/290	2	285	129.2
5 7/16	290-23532	290-532	401400	23232CCK/W33	HA 2332	FRB 5/290	2	305	138.3
5 15/16	280-23134	280-3134	401500	23134CCK/W33	HA 3134	FRB 10/280	2	300	136
6 7/16	300-23136	300-3136	401600	23136CCK/W33	HA 3136	FRB 10/300	2	340	154
6 15/16	320-23138	320-3138	401800	23138CCK/W33	HA 3138	FRB 10/320	2	410	186

For how to order, please refer to page 230.

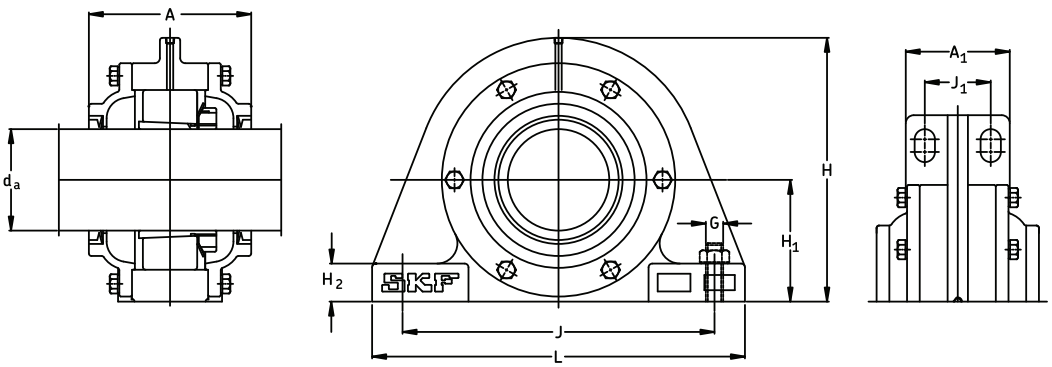

Housing No.	A	A_1	H	H_1	H_2	J	J_1	L	Bolt dia. (4 req'd) G
	in/mm								
200-522	6 3/8	5	10 9/16	4.938	1 5/8	13 1/2	2 3/4	16 1/2	3/4
	161.9	127.0	268.3	125.4	41.3	342.9	69.9	419.1	19
215-524	7 1/4	5	11 1/2	5.250	1 3/4	13 3/4	2 3/4	16 1/2	3/4
	184.2	127.0	292.1	133.4	44.5	349.3	69.9	419.1	19
230-526	8	5 1/8	13	6.000	1 7/8	15 3/8	3 1/4	18 3/8	7/8
	203.2	130.2	330.2	152.4	47.6	390.5	82.6	466.7	22
250-528	8	5 7/8	13 3/4	6.000	2	16 1/2	3 3/8	20 1/8	1
	203.2	149.2	349.3	152.4	50.8	419.1	85.7	511.2	24
290-532	8 3/4	6 1/4	15	6.688	2	18 1/4	3 3/4	22	1
	222.3	158.8	381.0	169.9	50.8	463.6	95.3	558.8	24
280-3134	8 3/4	6 1/4	15	6.688	2	18 1/4	3 3/4	22	1
	222.3	158.8	381	169.87	50.8	463.6	95.3	558.8	24
300-3136	9 1/2	6 3/4	16 1/4	7.063	2 1/8	20 5/8	4 1/4	24 3/4	1
	241.3	171.5	412.8	179.40	54	523.9	108	628.7	24
320-3138	9 7/8	7 1/8	16 1/2	7.500	2 1/8	22 1/4	4 5/8	26 3/4	1
	250.8	181	419.1	190.50	54	565.2	117.5	679.5	24

Series: Flanged Housings
d_a 1 11/16 - 4 15/16 in

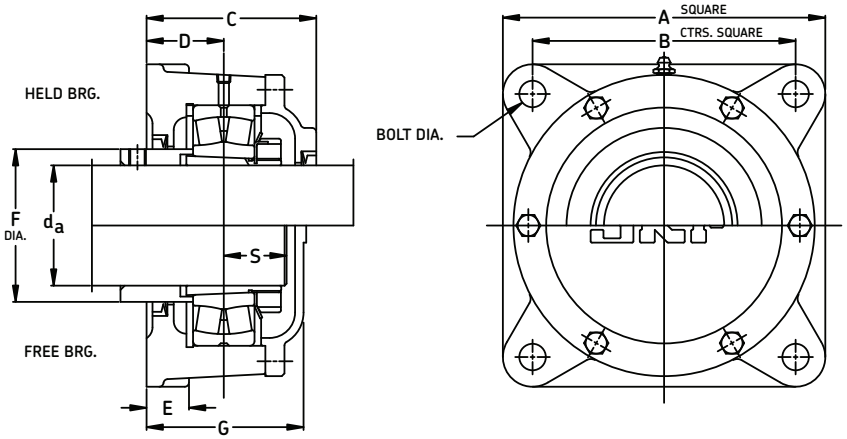

Shaft Dia. da	Complete Pillow Block Assembly	Housing	V-Ring Seal		Bearing	Adapter Sleeve	Fixing Rings Designation	Qty.
in								
1 11/16	F-90-22210 K	F-90	400400	400550	22210EK	HA 310	FRB 5/90	2
1 15/16	F-100-22211 K	F-100	400500	400650	22211 EK	HA 311	FRB 4/100	2
2 3/16	F-120-22213 K	F-120	400550	400800	22213EK	HA 313	FRB 4/120	2
2 7/16	F-130-22215 K	F-130	400600	400900	22215 EK	HA 315	FRB 5/130	2
2 11/16	F-140-22216 K	F-140	400650	400950	22216 EK	HA 316	FRB 5/140	2
2 15/16	F-150-22217 K	F-150	400750	401000	22217 EK	HA 317	FRB 5/150	2
3 7/16	F-180-22220 K	F-180	400850	401200	22220 EK	HA 320	FRB 5/180	2
3 15/16	F-200-22222 K	F-200	401000	401300	22222 EK	H 322	FRB 5.1/200	2
4 3/16	F-215-22224 K	F-215	401100	401400	22224 EK	HA 3124	FRB 5/215	2
4 7/16	F-230-22226 K	F-230	401100	401500	22226 EK	HA 3126	FRB 5/230	2
4 15/16	F-250-22228 K	F-250	401300	401700	22228CCK/W33	HA 3128	FRB 5/250	2

How to order:

When you order on F-200-22222 K you will receive a package containing the following:

1 - F-200 flanged housing
1 - V-ring 401000
1 - V-ring 401300
1 - Open end cover
1 - Spacer for locating the bearing
1 - Bearing SKF 22222EK
1 - Adapter sleeve H322

If your order specifies "HELD" or "FIXED" you will receive 2 fixing (locating or stabilizing) rings FRB 5.1/200.
Not more than one bearing on each shaft should be "HELD".
If you order specifies "ONE END CLOSED" you will receive one blind end cover in place of the open end cover and V-ring 401000.

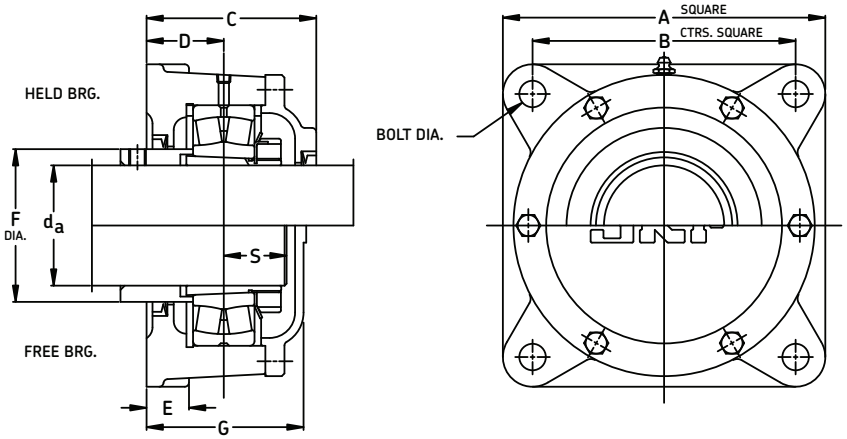

Housing No.	A	B	C	D	E	F	G	S	Bolt dia. (4 req'd) G
	in/mm								
F-90	5 127.0	3 7/8 98.4	3 76.2	1 7/16 36.5	13/16 20.6	2 3/8 60.3	2 13/16 71.4	1 1/16 27	1/2 12
F-100	5 5/8 142.9	4 3/8 111.1	3 1/4 82.6	1 9/16 39.7	7/8 22.2	2 9/16 65.1	3 1/16 77.8	1 3/32 27.8	9/16 14
F-120	6 3/8 161.9	5 1/8 130.2	3 11/16 93.7	1 13/16 46.0	1 25.4	3 1/8 79.4	3 1/2 88.9	1 25.4	5/8 16
F-130	7 177.8	5 5/8 142.9	4 1/8 104.8	1 7/16 36.5	1 25.4	3 1/2 88.9	3 13/16 96.8	1 1/4 31.8	5/8 16
F-140	7 5/8 193.7	6 152.4	4 5/16 109.5	1 15/16 49.2	1 25.4	3 11/16 93.7	4 101.6	1 3/8 34.9	5/8 16
F-150	8 1/4 209.6	6 1/2 165.1	4 5/8 117.5	2 1/8 54.0	1 1/8 28.6	3 15/16 100.0	4 1/4 108	1 7/16 36.5	3/4 20
F-180	9 1/2 241.3	7 3/4 196.9	5 127	2 5/16 58.7	1 1/8 28.6	4 1/2 114.3	4 5/8 117.5	1 3/4 44.5	3/4 20
F-200	10 3/4 273.1	8 1/2 215.9	5 7/8 149.2	2 15/16 74.6	1 1/2 38.1	5 127.0	5 1/2 139.7	1 13/16 46.0	1 24
F-215	11 1/4 285.8	9 228.6	6 1/4 158.8	3 76.2	1 1/2 38.1	5 1/2 139.7	5 7/8 149.2	1 15/16 49.2	1 24
F-230	12 304.8	9 3/4 247.7	6 13/16 173	3 1/8 79.4	1 1/2 38.1	5 7/8 149.2	6 3/4 171.5	2 3/16 55.6	1 24
F-250	12 1/2 317.5	10 254.0	6 3/4 171.5	3 1/8 79.4	1 1/2 38.1	6 1/2 165.1	6 3/4 171.5	2 1/8 54.0	1 24

Series: Flanged Unit FC
d_a 2 3/16 - 4 3/16 in

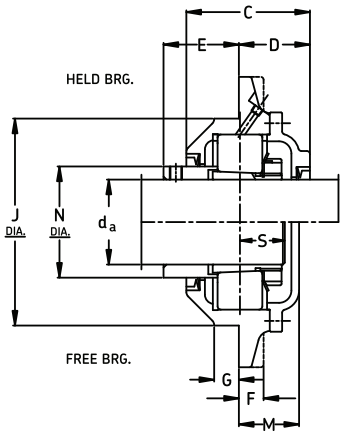

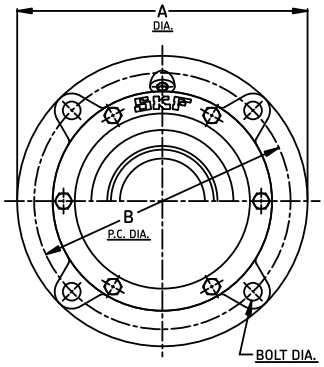

Shaft Dia. da	Complete Pillow Block Assembly	Housing	V-Ring Seal		Bearing	Adapter Sleeve	Fixing Rings Designation	Qty.
in								
2 3/16	FC-120-22213 K	FC-120	400550	400800	22213EK	HA 313	FRB 4/120	2
2 7/16	FC-130-22215 K	FC-130	400600	400900	22215 EK	HA 315	FRB 5/130	2
2 11/16	FC-140-22216 K	FC-140	400650	400950	22216 EK	HA 316	FRB 5/140	2
2 15/16	FC-150-22217 K	FC-150	400750	401000	22217 EK	HA 317	FRB 5/150	2
3 3/16	FC-160-22218 K	FC-160	400800	401100	22218 EK	HA 318	FRB 5/160	2
3 7/16	FC-180-22220 K	FC-180	400850	401200	22220 EK	HA 320	FRB 5/180	2
3 15/16	FC-200-22222 K	FC-200	401000	401300	22222 EK	H 322	FRB 5.1/200	2
4 3/16	FC-215-22224 K	FC-215	401100	401400	22224 EK	HA 3124	FRB 5/215	2

How to order:

When you order on FC-200-22222 K you will receive a package containing the following:

1 - FC-200 flanged housing
1 - V-ring 401000
1 - V-ring 401300
1 - Open end cover
1 - Spacer for locating the bearing
1 - Bearing SKF 22222EK
1 - Adapter sleeve H322

If your order specifies "HELD" or "FIXED" you will receive 2 fixing (locating or stabilizing) rings FRB 5.1/200.
Not more than one bearing on each shaft should be "HELD".
If you order specifies "ONE END CLOSED" you will receive one blind end cover in place of the open end cover and V-ring 401000.

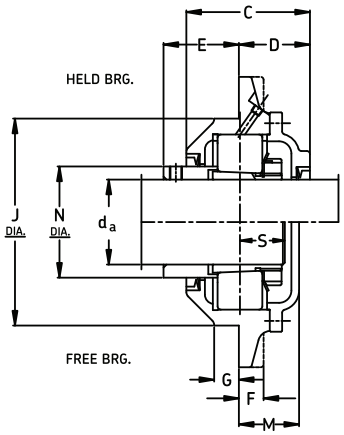

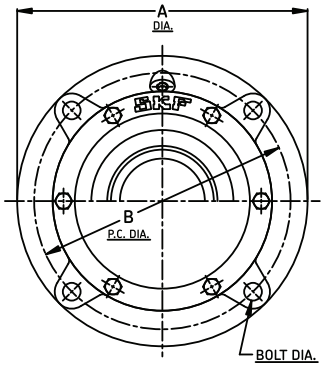

Housing No.												Bolt dia. No. req'd
	A	B	C	D	E	F	G	J	M	N	S	G
	in/mm											
FC-120	8 1/4	7 1/4	3 5/8	1 7/8	2 15/16	3/4	7/8	6.000	1 5/8	3.125	1	1/2
	209.6	184.2	92.1	47.6	74.6	19.1	22.2	152.40	41.3	82.55	25.4	12
FC-130	8 1/2	7 1/2	3 7/8	2 1/8	2 1/2	3/4	7/8	6.250	1 3/4	3.500	1 1/4	1/2
	215.9	190.5	98.4	54.0	63.5	19.1	22.2	158.75	44.5	88.90	31.8	12
FC-140	8 1/2	7 1/2	3 7/8	2 1/8	2 1/2	3/4	7/8	6.375	1 3/4	3.688	1 3/8	1/2
	215.9	190.5	98.4	54.0	63.5	19.1	22.2	161.93	44.5	93.68	34.9	12
FC-150	10 1/4	9	4 3/16	2 1/4	2 13/16	3/4	1	7.250	2	3.938	1 7/16	5/8
	260.4	228.6	106.4	57.2	71.4	19.1	25.4	184.15	50.8	100.03	36.5	16
FC-160	10 1/2	9 1/4	4 3/4	2 3/4	2 1/8	1	1	8.000	2 1/2	4.188	1 3/4	5/8
	266.7	235	120.7	69.9	54	25.4	25.4	203.20	63.5	106.38	44.5	16
FC-180	11 3/4	10 3/8	4 3/4	2 3/4	3	1	1	8.375	2 3/8	4.500	1 13/16	5/8
	298.5	263.5	120.7	69.9	76.2	25.4	25.4	212.73	60.3	114.30	46.0	16
FC-200	12 3/4	11 3/8	5 3/8	3	3 3/8	1	1 1/4	9.500	2 5/8	5.000	1 15/16	3/4
	323.9	288.9	136.5	76.2	85.7	25.4	31.8	241.30	66.7	127.00	49.2	20
FC-215	14 3/4	12 3/4	6 1/4	3 3/8	3 3/4	1 1/4	1 1/8	10.750	2 7/8	5.500	2 3/16	7/8
	374.7	323.9	158.8	85.7	95.2	31.8	28.6	273.05	73	139.70	55.6	22

Series: Flanged Unit FC
d_a 4 7/16 - 7 3/16 in

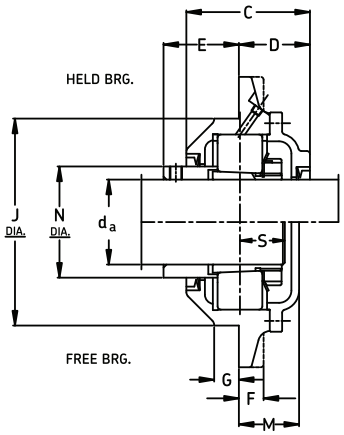

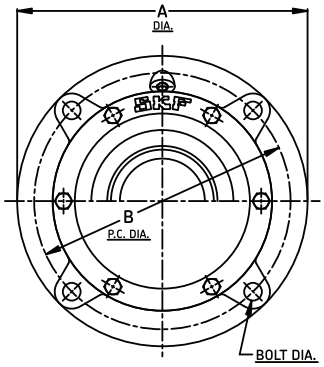

Shaft Dia. da	Complete Pillow Block Assembly	Housing	V-Ring Seal		Bearing	Adapter Sleeve	Fixing Rings Designation	Qty.
in								
4 7/16	FC-230-22226 K	FC-230	401100	401500	22226 EK	HA 3126	FRB 5/230	2
4 15/16	FC-250-22228 K	FC-250	401300	401700	22228CCK/W33	HA 3128	FRB 5/250	2
5 7/16	FC-290-22232 K	FC-290	401400	401900	22232CCK/W33	HA 3132	FRB 5/290	2
5 15/16	FC-260-23034 K	FC-260	401500	401900	23034CCK/W33	HA 3034	FRB 10/260	2
6 7/16	FC-300-23136 K	FC-300	401600	401990	23136CCK/W33	HA 3136	FRB 10/300	2
7 3/16	FC-360-22240 K	FC-360	401800	402500	22240CCK/W33	HA 3140	FRB 10/360	2

How to order:

When you order on FC-200-22222 K you will receive a package containing the following:
1 - FC-200 flanged housing
1 - V-ring 401000
1 - V-ring 401300
1 - Open end cover
1 - Spacer for locating the bearing
1 - Bearing SKF 22222EK
1 - Adapter sleeve H322
If your order specifies "HELD" or "FIXED" you will receive 2 fixing (locating or stabilizing) rings FRB 5.1/200.
Not more than one bearing on each shaft should be "HELD".
If you order specifies "ONE END CLOSED" you will receive one blind end cover in place of the open end cover and V-ring 401000.

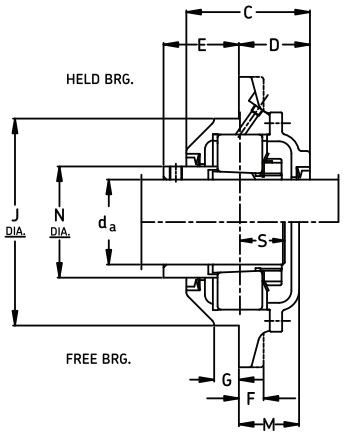

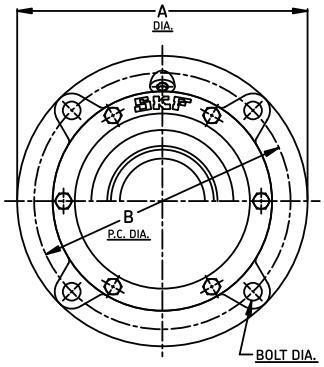

Housing No.	A	B	C	D	E	F	G	J	M	N	S	Bolt dia. No. req'd G
	in/mm											
FC-230	15 ¼	13 ⅜	6 ¾	3 ½	3 ½	1 ⅛	1 ⅛	11.250	3	5.875	2 ⅛	(4) ⅞
	387.4	339.7	171.5	88.9	88.9	28.6	28.6	285.8	76.2	149.2	54.0	(4) 22
FC-250	16	14	6 11/16	3 1/2	3 ⅝	1 ¼	1 ¼	12.000	3 ½	6.500	2 ¼	(4) 1
	406.4	355.6	169.9	88.9	92.1	31.8	31.8	304.8	88.9	165.1	57.2	(4) 24
FC-260	16	14	6 11/16	3 ½	3 ⅝	1 ¼	1 ¼	12.000	3 ½	7.500	2 ¼	(4) 1
	406.4	355.6	169.9	88.9	92.1	31.8	31.8	304.8	88.9	190.5	57.2	(4) 24
FC-290	18 ½	16 ½	8	3	6 ½	1 ¼	2	14.500	2 ¾	7.500	1 ½	(6) 1
	469.9	419.1	203.2	76.2	165.1	31.8	50.8	368.3	69.9	190.5	38.1	(6) 24
FC-300	18 ½	16 ½	8	3	6 ½	1 ¼	2	14.500	2 ¾	8.000	1 ½	(6) 1
	469.9	419.1	203.2	76.2	165.1	31.8	50.8	368.3	69.9	203.2	38.1	(6) 24
FC-360	22 ½	20	9	3	7 ½	1 ½	3	17.250	2 ¾	9.250	1 ½	(6) 1 ⅛
	571.5	508.0	228.6	76.2	190.5	38.1	76.2	438.2	69.9	235.0	38.1	(6) 27

Accessories

SKF supplies a variety of accessories for the location, mounting, dismounting, sealing and maintenance of rolling bearings.

Adapter Sleeves

Adapter sleeves are primarily used to locate rolling bearings with a tapered bore (taper 1:12) on cylindrical seatings. They permit commercially drawn shafting to be used as wider diameter tolerances are allowed for sleeve seatings than for bearing seatings.

SKF adapter sleeves are supplied complete with nut and locking device. The H..E sleeve is preferred over the SNW sleeves, where applicable, in applications where higher speeds are required. This design has a narrow gap, and because of the setscrew locking device does not require a lockwasher or a keyway in the shaft. Vibrations are considerably reduced with its usage.

Mounting or dismounting of large bearings on adapter sleeves is considerably facilitated with an SKF hydraulic nut, and further benefits can be gained if the SKF oil injection method is adopted. SKF adapter sleeves from size 44 onwards are therefore available with ducts and distribution grooves for pressurized oil. Further details regarding these and their availability can be supplied on request.

The dimensions of the adapter sleeves conform to:
ISO 2982-1: 1995 for metric sleeves
ANSI/ABMA std. 8:2 for inch sleeves

Withdrawal Sleeves

Withdrawal sleeves are an alternative method of mounting bearings with an interference fit. They permit removal at intervals for inspection or adjustment of machine parts. By locating the bearing against the shaft shoulder or locating ring, the withdrawal sleeve is pressed into the bearing bore with a mounting or hydraulic nut until the radial clearance of the bearing is reduced to the required amount. For easier dismounting of the bearing, the withdrawal sleeve can be supplied with oil injection ducts.

Lock Nuts

Depending on their use, lock nuts are also referred to as shaft or withdrawal nuts. They provide a simple means of axially locating bearings and other machine components on a shaft and also facilitate the mounting and dismounting of smaller bearings on withdrawal sleeves.

SKF lock nuts are generally made of sintered steel for most sizes but SG-cast iron is used on some of the larger sizes. For information on a specific size please contact the SKF engineering department.

Metric lock nuts up to and including size 40 (KM and KML designs) have a metric ISO thread to tolerance 5H, ISO 965-3:1998. Larger sizes have trapezoidal threads to tolerance 7H, ISO 2903:1993.

Inch-sized lock nuts up to and including a thread diameter of 12.562" have a thread of American National Form NS Class 3. Larger inch sizes have an Acme Class 3G general purpose thread. The mating inch thread on the shaft must be of the same form and tolerance as that of the nut. (Pages 292 - 294)

The dimensions of the metric lock nuts up to and including size 40 are in accordance with ISO 2982, BS 5646: Part 1 and ANSI/ABMA Std. 8.1. The inch series nuts are in accordance with ANSI/ABMA Std. 8.2.

Locking Washers, Locking Clips

Locking washers, type MB, are used to lock the smaller nuts on the shaft, while locking clips, MS, are used for larger sizes.

The locking washers are made of deep drawn steel strip. Dimensions of the metric sizes conform to ISO 2982, BS 5646 Part 1 and ANSI/ABMA Std. 8.2.

The locking clips and plates are also made of deep drawn steel strip. They are attached to the shaft nut using a screw with a hexagonal head to DIN 933. The screw and a spring washer to DIN 128 are supplied with the clips. Locking plates type P are supplied with a steel wire to be passed through the holes in the head of each screw. The ends of the wire should be twisted together to prevent loosening of the screws.

Wrenches

SKF wrenches are designed especially for use with shaft and withdrawal nuts for the drive-up of small bearings on a tapered shaft seating or adapter sleeve. They are also used on withdrawal nuts for the dismounting of small bearings from withdrawal sleeves.

The wrenches are made of construction steel; the jaws are machined and hardened. They are for use with nuts having the same designation number but in some cases are used for two or three sizes. See page 249 for a listing of the wrenches and the lock-nuts they can accommodate.

The impact wrenches are made of spherodial graphite cast iron and have a special impact face positioned to permit maximum transmission of the impact energy to the nuts. The impact wrenches are designed so that each may be used for a number of nut sizes.

Hydraulic Nuts

SKF hydraulic nuts considerably facilitate the mounting of rolling bearings with a tapered bore and dismounting bearings from both adapter and withdrawal sleeves. They comprise an internally threaded steel ring with a groove in one face into which an annular piston is fitted. This piston is activated when pressurized oil is injected. Up to size 40, the hydraulic nuts have metric fine threads with an ISO profile of medium quality. Sizes 41 and above incorporate metric ISO trapezoidal threads. Hydraulic nuts with inch threads or nuts without threads can also be supplied. All designs are made of high-strength steel and are designed to withstand the pressures generally encountered when mounting and dismounting rolling bearings. The oil pumps required in conjunction with the hydraulic nuts are available in a number of designs from SKF. Normal machine oil having a viscosity of approximately 300 cSt at 20°C is suitable as a pressure medium during mounting. For dismounting, oil with a viscosity of 900 cSt is preferred. Further information on hydraulic nuts, pumps or adapters is available from the SKF engineering department. (Pages 254 -257)

Other Accessories

In addition to the selection of accessories shown on the following pages, SKF can also supply a wide variety of other aids for mounting, dismounting, monitoring and lubrication of rolling bearings. For complete details on the numerous items available please consult the SKF Maintenance Catalogue MP 3000, available from your local SKF office or online at www.mapro.skf.com.

Lock Nuts
Metric
M 10 x 0.75 - M 80 x 2

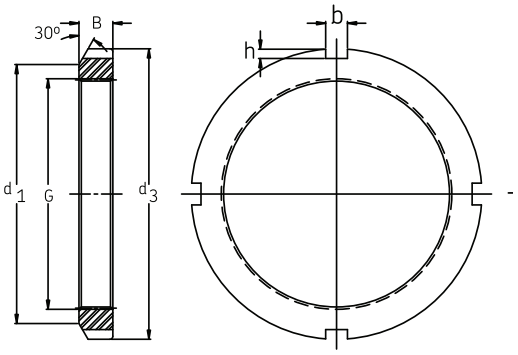

KM 0 - KM 16

Dimensions						Mass	Designation		
G	d_1	d_3	B	b	h			Locking Device	Wrench
mm	in/mm					kg/lb			
M 10x0.75	13.5	18	4	3	2	0.006	**KM 0**	MB 0	HN 0
	0.531	0.709	0.157	0.118	0.079	0.013			
M 12x1	17	22	4	3	2	0.008	**KM 1**	MB 1	HN 1
	0.669	0.866	0.157	0.118	0.079	0.018			
M 15x1	21	25	5	4	2	0.012	**KM 2**	MB 2	HN 2 - 3
	0.827	0.984	0.197	0.157	0.079	0.026			
M 17x1	24	28	5	4	2	0.012	**KM 3**	MB 3	HN 2 - 3
	0.945	1.102	0.197	0.157	0.079	0.026			
M 20x1	26	32	6	4	2	0.020	**KM 4**	MB 4	HN 4
	1.024	1.260	0.236	0.157	0.079	0.044			
M 25x1.5	32	38	7	5	2	0.028	**KM 5**	MB 5	HN 5-6
	1.260	1.496	0.276	0.197	0.079	0.062			
M 30x1.5	38	45	7	5	2	0.038	**KM 6**	MB 6	HN 5-6
	1.496	1.772	0.276	0.197	0.079	0.084			
M 35x1.5	44	52	8	5	2	0.058	**KM 7**	MB 7	HN 7
	1.732	2.047	0.315	0.197	0.079	0.128			
M 40x1.5	50	58	9	6	2.5	0.078	**KM 8**	MB 8	HN 8-9
	1.969	2.283	0.354	0.236	0.098	0.172			
M 45x1.5	56	65	10	6	2.5	0.11	**KM 9**	MB 9	HN 8-9
	2.205	2.559	0.394	0.236	0.098	0.24			
M 50x1.5	61	70	11	6	2.5	0.14	**KM 10**	MB 10	HN 10-11
	2.402	2.756	0.433	0.236	0.098	0.31			
M 55x2	67	75	11	7	3	0.15	**KM 11**	MB 11	HN 10-11
	2.638	2.953	0.433	0.276	0.118	0.33			
M 60x2	73	80	11	7	3	0.16	**KM 12**	MB 12	HN 12-13
	2.874	3.150	0.433	0.276	0.118	0.35			
M 65x2	79	85	12	7	3	0.19	**KM 13**	MB 13	HN 12-13
	3.110	3.346	0.472	0.276	0.118	0.42			
M 70x2	85	92	12	8	3.5	0.22	**KM 14**	MB 14	HN 14
	3.346	3.622	0.472	0.315	0.138	0.48			
M 75x2	90	98	13	8	3.5	0.27	**KM 15**	MB 15	HN 15
	3.543	3.858	0.512	0.315	0.138	0.59			
M 80x2	95	105	15	8	3.5	0.36	**KM 16**	MB 16	HN 16
	3.740	4.134	0.591	0.315	0.138	0.79			

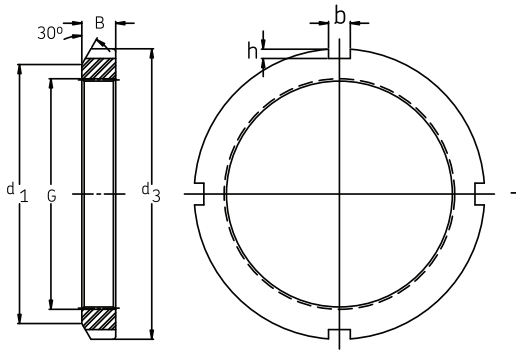

KM 17 - KML 30

Dimensions						Mass	Designation		
G	d_1	d_3	B	b	h			Locking Device	Wrench
mm	in/mm					kg/lb			
M 85x2	102	110	16	8	3.5	0.42	**KM 17**	MB 17	HN 17
	4.016	4.331	0.630	0.315	0.138	0.93			
M 90x2	108	120	16	10	4	0.51	**KM 18**	MB 18	HN 18-20
	4.252	4.724	0.630	0.394	0.157	1.12			
M 95x2	113	125	17	10	4	0.58	**KM 19**	MB 19	HN 18-20
	4.449	4.921	0.669	0.394	0.157	1.28			
M 100x2	120	130	18	10	4	0.68	**KM 20**	MB 20	HN 18-20
	4.724	5.118	0.708	0.394	0.157	1.50			
M 105x2	126	140	18	12	5	0.81	**KM 21**	MB 21	HN 21-22
	4.961	5.512	0.708	0.472	0.197	1.79			
M 110x2	133	145	19	12	5	0.89	**KM 22**	MB 22	HN 21-22
	5.236	5.709	0.748	0.472	0.197	1.96			
M 115x2	137	150	19	12	5	0.91	**KM 23**	MB 23	TMFN 23-30
	5.394	5.906	0.748	0.472	0.197	2.00			
M 120x2	135	145	20	12	5	0.69	**KML 24**	MBL 24	TMFN 23-30
	5.315	5.709	0.787	0.472	0.197	1.52			
M 120x2	138	155	20	12	5	0.98	**KM 24**	MB 24	TMFN 23-30
	5.433	6.102	0.787	0.472	0.197	2.16			
M 125x2	148	160	21	12	5	1.10	**KM 25**	MB 25	TMFN 23-30
	5.827	6.299	0.827	0.472	0.197	2.43			
M 130x2	145	155	21	12	5	0.84	**KML 26**	MB 26	TMFN 23-30
	5.709	6.102	0.827	0.472	0.197	1.85			
M 130x2	149	165	21	12	5	1.20	**KM 26**	MB 26	TMFN 23-30
	5.866	6.496	0.827	0.472	0.197	2.65			
M 135x2	160	175	22	14	6	1.40	**KM 27**	MB 27	TMFN 23-30
	6.299	6.890	0.866	0.551	0.236	3.09			
M 140x2	155	165	22	12	5	0.92	**KML 28**	MBL 28	TMFN 23-30
	6.102	6.496	0.866	0.472	0.197	2.03			
M 140x2	160	180	22	14	6	1.40	**KM 28**	MB 28	TMFN 23-30
	6.299	7.087	0.866	0.551	0.236	3.09			
M 145x2	172	190	24	14	6	1.85	**KM 29**	MB 29	TMFN 23-30
	6.772	7.480	0.945	0.551	0.236	4.08			
M 150x2	170	180	24	14	5	1.30	**KML 30**	MBL 30	TMFN 23-30
	6.693	7.087	0.945	0.551	0.197	2.87			

Lock Nuts/Removal Nuts
M150 x 2 - Tr220 x 4

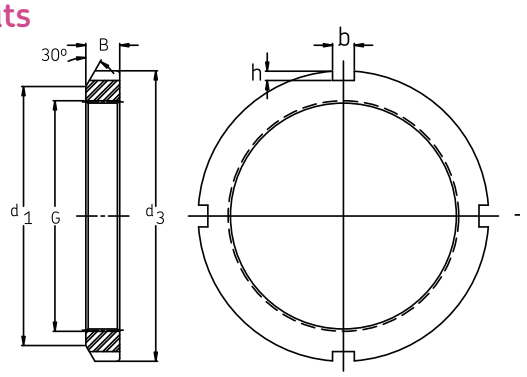

KM 30 - HM 44T

Dimensions						Mass	Designation		
G	d_1	d_3	B	b	h			Locking Device	Wrench
mm	in/mm					kg/lb			
M 150x2	171	195	24	14	6	1.85	**KM 30**	MB 30	TMFN 23-30
	6.732	7.677	0.945	0.551	0.236	4.08			TMFN 30-40
M 155x3	182	200	25	16	7	2.05	**KM 31**	MB 31	TMFN 30-40
	7.165	7.874	0.984	0.630	0.275	4.52			
M 160x3	180	190	25	14	5	1.40	**KML 32**	MBL 32	TMFN 30-40
	7.087	7.480	0.984	0.551	0.197	3.09			
M 160x3	182	210	25	16	7	2.25	**KM 32**	MB 32	TMFN 30-40
	7.165	8.268	0.984	0.630	0.275	4.96			
M 165x3	193	210	26	16	7	2.30	**KM 33**	MB 33	TMFN 30-40
	7.598	8.268	1.024	0.630	0.275	5.07			
M 170x3	190	200	26	16	5	1.60	**KML 34**	MBL 34	TMFN 30-40
	7.480	7.874	1.024	0.630	0.197	3.53			
M 170x3	193	220	26	16	7	2.55	**KM 34**	MB 34	TMFN 30-40
	7.598	8.661	1.024	0.630	0.275	5.62			
M 180x3	200	210	27	16	5	1.80	**KML 36**	MBL 36	TMFN 30-40
	7.874	8.268	1.063	0.630	0.197	3.97			
M 180x3	203	230	27	18	8	3.00	**KM 36**	MB 36	TMFN 30-40
	7.992	9.055	1.063	0.708	0.315	6.61			
M 190x3	210	220	28	16	5	1.90	**KML 38**	MBL 38	TMFN 30-40
	8.268	8.661	1.102	0.630	0.197	4.19			
M 190x3	214	240	28	18	8	3.00	**KM 38**	MB 38	TMFN 30-40
	8.425	9.449	1.102	0.708	0.315	6.61			
M 200x3	222	240	29	18	8	2.60	**KML 40**	MBL 40	TMFN 30-40
	8.740	9.449	1.142	0.708	0.315	5.73			
M 200x3	226	250	29	18	8	3.30	**KM 40**	MB40	TMFN 30-40
	8.898	9.842	1.142	0.708	0.315	7.28			TMFN 40-52
Tr 205x4	232	250	30	18	8	3.40	**HML 41 T**	-	TMFN 30-40
	9.134	9.842	1.181	0.708	0.315	7.50			
Tr 210x4	238	270	30	20	10	5.10	**HM 42 T**	-	TMFN 40-52
	9.370	10.623	1.181	0.787	0.394	11.2			
Tr 215x4	242	260	30	20	9	3.70	**HM 43 T**	-	TMFN 40-52
	9.527	10.236	1.181	0.787	0.354	8.16			
Tr 220x4	250	280	32	20	10	4.75	**HM 44 T**	MB 44	TMFN 40-52
	9.842	11.024	1.260	0.787	0.394	10.5			

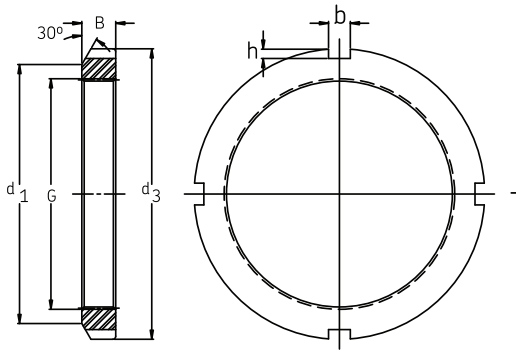

HM 46T - HM 74T

Dimensions						Mass	Designation		
G	d_1	d_3	B	b	h			Locking Device	Wrench
mm	in/mm					kg/lb			
Tr 230x4	260	290	34	20	10	5.60	**HM 46 T**	-	TMFN 40-52
	10.236	11.417	1.338	0.787	0.394	12.4			
Tr 235x4	262	280	34	20	9	4.60	**HML 47 T**	-	TMFN 40-52
	10.315	11.024	1.338	0.787	0.354	10.1			
Tr 240x4	270	300	34	20	10	5.60	**HM 48 T**	MB 48	TMFN 40-52
	10.630	11.811	1.338	0.787	.394	12.4			
Tr 250x4	290	320	36	20	10	7.45	**HM 50 T**	-	TMFN 40-52
	11.417	12.598	1.417	0.787	0.394	16.4			
Tr 260x4	300	330	36	24	12	7.55	**HM 52 T**	MB 52	TMFN 52-64
	11.811	12.992	1.417	0.945	0.472	16.6			
Tr 270x4	310	340	38	24	12	9.20	**HM 54 T**	-	TMFN 52-64
	12.205	13.386	1.496	0.945	0.472	20.3			
Tr 280x4	320	350	38	24	12	8.65	**HM 56 T**	MB 56	TMFN 52-64
	12.598	13.779	1.496	0.945	0.472	19.0			
Tr 290x4	330	370	40	24	12	12.0	**HM 58 T**	-	TMFN 52-64
	12.922	14.567	1.575	0.945	0.472	26.5			
Tr 310x5	350	390	42	24	12	13.5	**HM 62 T**	-	TMFN 52-64
	13.779	15.354	1.653	0.945	0.472	29.8			
Tr 330x5	380	420	52	28	15	20.5	**HM 66 T**	-	TMFN 64-80
	14.960	16.535	2.047	1.102	0.590	45.2			
Tr 350x5	410	450	55	28	15	25.0	**HM 70 T**	-	TMFN 64-80
	16.142	17.716	2.165	1.102	0.590	55.0			
Tr 370x5	430	470	58	28	15	28.0	**HM 74 T**	-	TMFN 64-80
	16.929	18.504	2.283	1.102	0.590	61.7			

Lock Nuts U.S. Thread Form 0.391 - 3.137 in

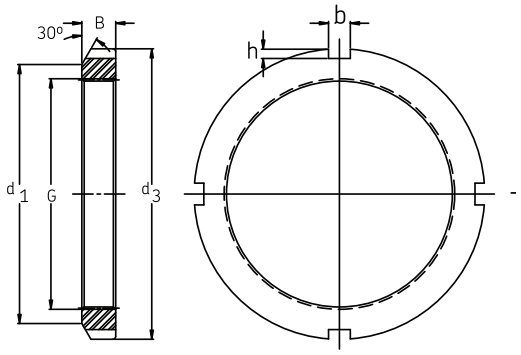

N-00 - AN-16

Dimensions G Major Dia.	T.P.I.	d1	d3	B	b	h	Mass	Designation Lock Nut	Locking Device	Wrench
in		in/mm					g/oz			
0.391	32	0.625	0.755	0.229	0.120	0.073	4	**N-00**	W 00	HN 0
		15.88	19.18	5.82	3.05	1.85	0.14			
0.469	32	0.719	0.880	0.323	0.120	0.073	7	**N-01**	W 01	HN 1
		18.26	22.35	8.20	3.05	1.85	0.25			
0.586	32	0.813	1.005	0.323	0.120	0.104	10	**N-02**	W 02	HN 2-3
		20.65	25.53	8.20	3.05	2.64	0.35			
0.664	32	0.938	1.130	0.354	0.120	0.104	13	**N-03**	W 03	HN 2-3
		23.82	28.70	8.99	3.05	2.64	0.46			
0.781	32	1.126	1.380	0.385	0.178	0.104	19	**N-04**	W 04	HN 4
		28.58	35.05	9.78	4.52	2.64	0.67			
0.989	32	1.281	1.568	0.416	0.178	0.104	25	**N-05**	W 05	HN 5-6
		32.54	39.83	10.57	4.52	2.64	0.88			
1.173	18	1.500	1.755	0.416	0.178	0.104	43	**N-06**	W 06	HN 5-6
		38.10	44.58	10.57	4.52	2.64	1.52			
1.376	18	1.813	2.068	0.448	0.178	0.104	53	**N-07**	W 07	HN 7
		46.05	52.53	11.38	4.52	2.64	1.87			
1.563	18	2.000	2.255	0.448	0.240	0.104	85	**N-08**	W 08	HN 8-9
		50.80	57.28	11.38	6.10	2.64	3.00			
1.767	18	2.281	2.536	0.448	0.240	0.104	120	**N-09**	W 09	HN 8-9
		57.94	64.41	11.38	6.10	2.64	4.23			
1.967	18	2.438	2.693	0.510	0.240	0.104	150	**N-10**	W 10	HN 10-11
		61.92	68.40	12.95	6.10	2.64	5.29			
2.157	18	2.656	2.974	0.510	0.240	0.135	160	**N-11**	W 11	HN 10-11
		67.46	75.54	12.95	6.10	3.43	5.64			
2.360	18	2.844	3.161	0.541	0.240	0.135	220	**N-12**	W 12	HN 12-13
		72.24	80.29	13.74	6.10	3.43	7.76			
2.548	18	3.063	3.380	0.573	0.240	0.135	200	**N-13**	W 13	HN 12-13
		77.80	85.85	14.55	6.10	3.43	7.05			
2.751	18	3.313	3.630	0.573	0.240	0.135	240	**N-14**	W 14	HN 14
		84.15	92.20	14.55	6.10	3.43	8.46			
2.933	12	3.563	3.880	0.604	0.360	0.135	290	**AN-15**	W 15	HN 15
		90.50	98.55	15.34	9.14	3.43	10.2			
3.137	12	3.844	4.161	0.604	0.360	0.135	400	**AN-16**	W 16	HN 16
		97.64	105.69	15.34	9.14	3.43	14.1			

Lock Nuts U.S. Thread Form
AN-17 - N-44
3.340 - 8.628 in

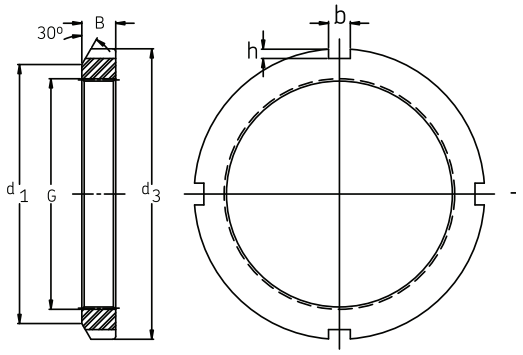

AN-17 - N-44

Dimensions G Major Dia.	T.P.I.	d_1	d_3	B	b	h	Mass	Designation Lock Nut	Locking Device	Wrench
in		in/mm					g/oz			
3.340	12	4.031	4.411	0.635	0.360	0.166	450	**AN-17**	W 17	HN 17
		102.39	112.04	16.13	9.14	4.22	15.9			
3.527	12	4.281	4.661	0.698	0.360	0.166	560	**AN-18**	W 18	HN 18-20
		108.74	118.39	17.73	9.14	4.22	19.8			
3.730	12	4.563	4.943	0.729	0.360	0.166	660	**AN-19**	W 19	HN 18-20
		115.90	125.55	18.52	9.14	4.22	23.3			
3.918	12	4.813	5.193	0.760	0.360	0.166	.70	**AN-20**	W 20	HN 18-20
		122.25	131.90	19.30	9.14	4.22	1.45			
4.122	12	5.000	5.443	0.760	0.485	0.198	.85	**AN-21**	W 21	HN 21-22
		127.00	138.25	19.30	12.32	5.03	1.87			
4.325	12	5.281	5.724	0.791	0.485	0.198	.97	**AN-22**	W 22	HN 21-22
		134.14	145.39	20.09	12.32	5.03	2.14			
4.716	12	5.688	6.130	0.823	0'.485	0.198	1.10	**AN-24**	W 24	TMFN 23-30
		144.48	155.70	20.90	12.32	5.03	2.42			
5.106	12	6.188	6.755	0.885	0.610	0.260	1.25	**AN-26**	W 26	TMFN 23-30
		157.18	171.58	22.48	15.49	6.60	2.76			
5.497	12	6.531	7.099	0.948	0.610	0.260	1.55	**AN-28**	W 28	TMFN 23-30
		165.89	180.31	24.08	15.49	6.60	3.42			
5.888	12	7.063	7.693	0.979	0.610	0.291	2.00	**AN-30**	W 30	TMFN 23-30
		179.40	195.40	24.87	15.49	7.39	4.41			TMFN 30-40
6.284	8	7.438	8.068	1.041	0.610	0.291	2.60	**AN-32**	W 32	TMFN 30-40
		188.92	204.93	26.44	15.49	7.39	5.73			
6.659	8	8.031	8.661	1.073	0.610	0.291	2.80	**AN-34**	W 34	TMFN 30-40
		203.99	219.99	27.25	15.49	7.39	6.20			
7.066	8	8.375	9.068	1.104	0.735	0.323	3.05	**AN-36**	W 36	TMFN 30-40
		212.72	230.33	28.04	18.67	8.20	6.72			
7.472	8	8.781	9.474	1.135	0.735	0.323	3.40	**AN-38**	W 38	TMFN 30-40
		223.04	240.64	28.83	18.67	8.20	7.49			
7.847	8	9.156	9.849	1.198	0.735	0.323	3.70	**AN-40**	W 30	TMFN 30-40
		232.56	250.16	30.43	18.67	8.20	8.16			TMFN 40-52
8.628	8	9.843	11.005	1.260	0.980	0.510	4.00	**N-44**	W 44[1)]	TMFN 40-52
		250.01	279.53	32.00	24.89	12.95	8.82			

[1)] Locking washer angle 65°

Lock Nuts, Lock Washers And Lock Plates: Light Section

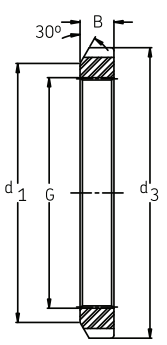

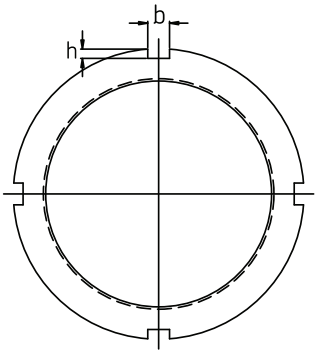

N 022 - N 048

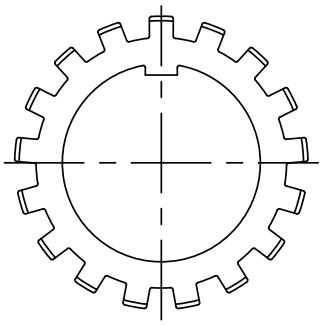

W 022 - W 044

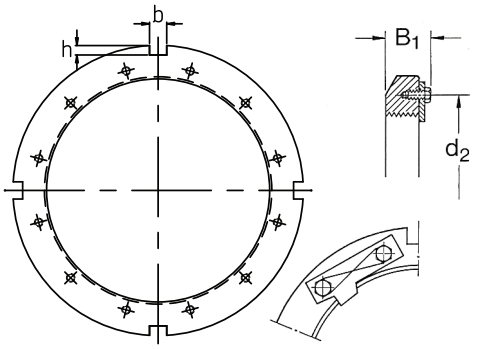

P 48

Dimensions G Major Dia.	T.P.I.	d_1	d_2	d_3	B	B_1	b	h	Mass	Designation Lock Nut	Locking Device	Wrench	Hex. Head Retaining Screw
in		in/mm							kg/lb				
4.325	12	4.901	-	5.318	0.791	-	0.485	0.198	0.63	**N 022**	W 022	HN 21-22	-
		124.48	-	135.06	20.09	-	12.32	5.03	1.39				
4.716	12	5.313	-	5.693	0.823	-	0.485	0.198	0.71	**N 024**	W 024	TMFN 23-30	-
		134.95	-	144.60	20.90	-	12.32	5.03	1.56				
5.106	12	5.703	-	6.130	0.885	-	0.485	0.198	0.86	**N 026**	W 026	TMFN 23-30	-
		144.86	-	155.70	22.48	-	12.32	5.03	1.89				
5.497	12	6.109	-	6.505	0.948	-	0.485	0.266	0.98	**N 028**	W 028	TMFN 23-30	-
		155.17	-	165.23	24.08	-	12.32	5.73	2.16				
5.888	12	6.688	-	7.130	0.979	-	0.610	0.229	1.35	**N 030**	W 030	TMFN 23-30	-
		169.88	-	181.10	24.87	-	15.49	5.82	2.98				
6.284	8	7.094	-	7.505	1.041	-	.610	0.229	1.50	**N 032**	W 032	TMFN 23-30	-
		180.19	-	190.63	26.44	-	15.49	5.82	3.31				
6.659	8	7.484	-	7.880	1.073	-	0.610	0.229	1.65	**N 034**	W 034	TMFN 30-40	-
		190.09	-	200.15	27.25	-	15.49	5.82	3.64				
7.065	8	7.875	-	8.255	1.104	-	0.610	0.229	1.75	**N 036**	W 036	TMFN 30-40	-
		200.02	-	209.68	28.04	-	15.49	5.82	3.86				
7.472	8	8.266	-	8.693	1.135	-	0.610	0.229	1.95	**N 038**	W 038	TMFN 30-40	-
		209.96	-	220.80	28.83	-	15.49	5.82	4.30				
7.847	8	8.750	-	9.443	1.198	-	0.735	0.323	2.75	**N 040**	W 040	TMFN 30-40	-
		222.25	-	239.85	30.43	-	18.67	8.20	6.06				
8.628	8	9.531	-	10.255	1.260	-	0.860	0.385	3.20	**N 044**	W 044	TMFN 40-52	-
		242.09	-	206.48	32.00	-	21.84	9.78	7.06				
9.442	6	10.625	10.423	11.443	1.354	1.687	0.860	0.385	4.50	**N 048**	P 48	TMFN 40-52	$^{5}/_{16}$-18x $^{5}/_{8}$
		269.88	264.74	290.65	34.39	42.85	21.84	9.78	9.92				

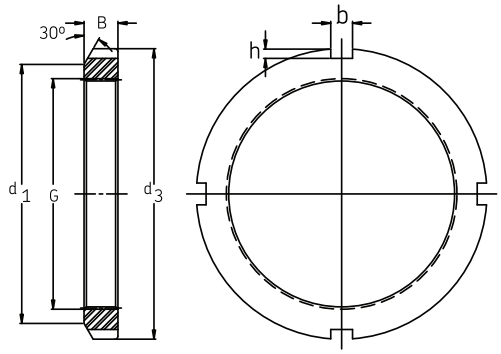

N 052 - N 096

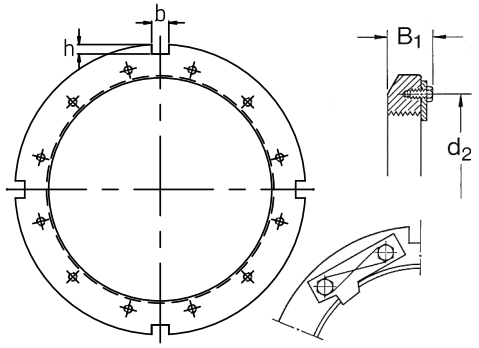

P 52 L/P - P 96

Dimensions G Major Dia.	T.P.I. T.P.I.	d_1	d_2	d_3	B	B_1	b	h	Mass	Designation Lock Nut	Locking Device	Wrench	Hex. Head Retaining Screw
in		in/mm							kg/lb				
10.192	6	11.406	11.298	12.193	1.416	1.750	0.860	0.385	5.10	**N 052**	P 52 L/P	TMFN 40-52	5/16-18x5/8
		289.71	286.97	309.70	35.97	44.45	21.84	9.78	11.2				
11.004	6	12.219	12.110	13.005	1.510	1.844	0.980	0.385	5.80	**N 056**	P 56	TMFN 52-64	5/16-18x5/8
		310.36	307.59	330.33	38.35	46.84	24.89	9.78	12.8				
11.785	6	13.219	13.110	14.193	1.573	1.937	0.980	0.510	7.80	**N 060**	P 60	TMFN 52-64	3/8-16x3/4
		335.76	332.99	360.50	39.95	49.20	24.89	12.95	17.2				
12.562	6	14.031	13.860	15.005	1.666	2.031	0.980	0.510	9.00	**N 064**	P 64	TMFN 52-64	3/8-16x3/4
		356.39	352.04	381.13	42.32	51.59	24.89	12.95	19.8				
13.339	5	14.813	14.735	15.755	1.791	2.156	0.980	0.510	10.7	**N 068**	P 68	TMFN 52-64	3/8-16x3/4
		376.25	374.27	400.18	45.49	54.76	24.89	12.95	23.6			TMFN 64-80	
14.170	5	15.500	15.485	16.505	1.791	2.156	1.230	0.510	10.8	**N 072**	P 72 L/P	TMFN 64-80	3/8-16x3/4
		393.70	393.32	419.23	45.49	54.76	31.24	12.95	23.8				
14.957	5	16.625	16.485	17.755	1.916	2.344	1.230	0.604	14.6	**N 076**	P 76	TMFN 64-80	1/2-13x7/8
		422.28	418.72	450.98	48.67	59.54	31.24	15.34	32.2				
15.745	5	17.438	17.235	18.505	2.073	2.500	1.230	0.604	16.5	**N 080**	P 80	TMFN 64-80	1/2-13x7/8
		442.93	437.77	470.03	52.65	63.50	31.24	15.34	36.4				
16.532	5	18.188	18.110	19.318	2.073	2.500	1.355	0.604	17.3	**N 084**	P 84	TMFN 64-80	1/2-13x7/8
		461.98	459.99	490.66	52.65	63.50	34.42	15.34	38.1				
17.319	5	19.250	19.110	20.505	2.385	2.906	1.355	0.607	24.1	**N 088**	P 88	TMFN 64-80	5/8-11x1
		488.95	485.39	520.83	60.58	73.81	34.42	15.43	53.1			TMFN 80-500	
18.107	5	20.688	19.985	21.255	2.385	2.906	1.355	0.607	25.5	**N 092**	P 92	TMFN 80-500	5/8-11x1
		525.48	507.62	539.88	60.58	73.81	34.42	15.43	56.2				
18.894	5	20.750	20.673	22.068	2.385	2.937	1.480	0.607	25.9	**N 096**	P 96	TMFN 80-500	5/8-11x11/4
		527.05	525.09	560.53	60.58	74.60	37.59	15.43	57.1				

KMFE Locknuts with Locking Screw
M 20 x 1 - M130 x 2

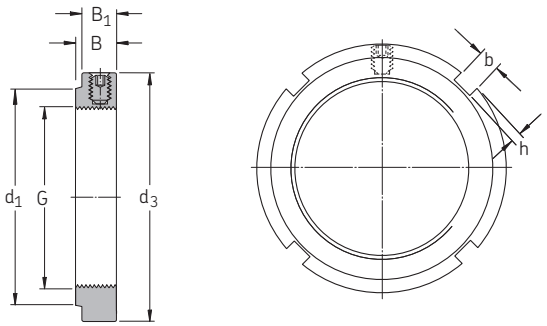

KMFE 4 - KMFE 26

Dimensions							Axial Static Capacity	Loosening Torque	Mass	Designation Lock nut	Spanner Wrench	Grub Screw Size	Recomm. Tightening Torque
G	d_1	d_3	B	B_1	b	h							
mm							kN	Nm	kg				Nm
M 20x1	26	32	9.5	8.5	4	2	24	28	0.031	**KMFE 4**	HN 4	M5	4
M 25x1.5	31	38	10.5	8.5	5	2	31.5	35	0.042	**KMFE 5**	HN 5 - 6	M5	4
M 30x1.5	36	45	10.5	8.5	5	2	36.5	42	0.058	**KMFE 6**	HN 5 - 6	M5	4
M 35x1.5	42.5	52	11.5	8.5	5	2	50	49	0.08	**KMFE 7**	HN 7	M5	4
M 40x1.5	47	58	13	10	6	2.5	62	80	0.11	**KMFE 8**	HN 8 - 9	M6	8
M 45x1.5	53	65	13	10	6	2.5	78	94	0.14	**KMFE 9**	HN 8 - 9	M6	8
M 50x1.5	57.5	70	14	11	6	2.5	91.5	100	0.16	**KMFE 10**	HN 10 - 11	M6	8
M 55x2	64	75	14	11	7	3	91.5	110	0.18	**KMFE 11**	HN 10 - 11	M6	8
M 60x2	69	80	14	11	7	3	95	120	0.19	**KMFE 12**	HN 12 - 13	M6	8
M 65x2	76	85	15	12	7	3	108	130	0.23	**KMFE 13**	HN 12 - 13	M6	8
M 70x2	79	92	15	12	8	3.5	118	140	0.26	**KMFE 14**	HN 14	M6	8
M 75x2	85	98	16	13	8	3.5	134	150	0.32	**KMFE 15**	HN 15	M6	8
M 80x2	91.5	105	18	15	8	3.5	173	300	0.42	**KMFE 16**	HN 16	M8	18
M 85x2	98	110	19	15	8	3.5	190	315	0.46	**KMFE 17**	HN 17	M8	18
M 90x2	102	120	19	15	10	4	216	335	0.58	**KMFE 18**	HN 18 - 20	M8	18
M 95x2	110	125	20	16	10	4	236	355	0.66	**KMFE 19**	HN 18 - 20	M8	18
M 100x2	112	130	21	17	10	4	255	370	0.71	**KMFE 20**	HN 18 - 20	M8	18
M 105x2	112	140	21	17	12	5	290	390	0.85	**KMFE 21**	HN 21 - 22	M8	18
M 110x2	122	145	21.5	17.5	12	5	310	410	0.93	**KMFE 22**	HN 21 - 22	M8	18
M 115x2	126	150	25	20	12	5	315	645	1.11	**KMFE 23**	TMFN 23-30	M10	35
M 120x2	130	155	26	20	12	5	340	675	1.16	**KMFE 24**	TMFN 23-30	M10	35
M 125x2	136	160	27	21	12	5	360	700	1.26	**KMFE 25**	TMFN 23-30	M10	35
M 130x2	141	165	28	21	12	5	365	730	1.33	**KMFE 26**	TMFN 23-30	M10	35

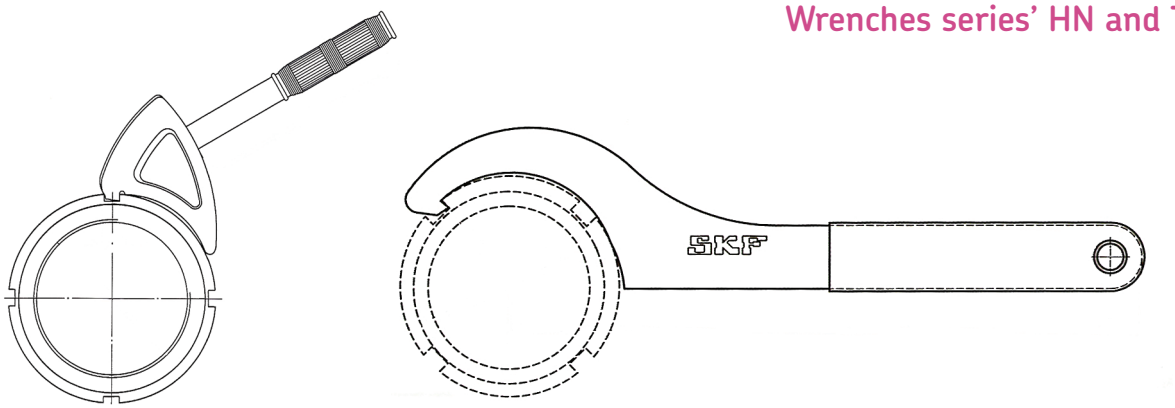

Designation

	Suitable for nut series:					
	KM	N	AN	KMK	KMFE	KMT
HN 0	0	0		0		
HN 1	1	1		1		
HN 2-3	2, 3	2, 3		2, 3		0
HN 4	4	4		4	4	1, 2
HN 5-6	5, 6	5, 6		5, 6	5, 6	3, 4, 5
HN 7	7	7		7	7	6,7
HN 8-9	8, 9	8, 9		8, 9	8, 9	8
HN 10-11	10, 11	10, 11		10, 11	10, 11	9, 10
HN 12-13	12, 13	12, 13		12, 13	12, 13	11, 12
HN 14	14		14	14	14	
HN 15	15		15	15	15	13, 14
HN 16	16		16	16	16	15
HN 17	17		17	17	17	16
HN 18-20	18, 19, 20		18, 19, 20	18, 19, 20	18, 19, 20	17, 18, 19
HN 21-22	21, 22		21, 22		21, 22	20, 22

Designation	Suitable for nut series:									
	H23, H31, H32	H30, H39	KM	KML	KMFE	HM..T	HML..T	HM30	HM31	AN	N
TMFN 23-30	24 - 30	26 - 32	23 - 30	26 - 32	23 - 26					24 - 30	026 - 032
TMFN 30-40	30 - 40	34 - 40	30 - 40	34 - 40			41 - 42			30 - 40	034 - 040
TMFN 40-52	40 - 48	44 - 52	40 - 52			41 - 50	41 - 54	44 - 52		40 - 44	044 - 052
TMFN 52-64	52 - 64	56 - 68				50 - 64	54 - 68	56 - 68	60 - 64		056 - 068
TMFN 64-80	64 - 80	68 - 88				64 - 80	68 - 90	68 - 88	64 - 80		068 - 088
TMFN 80 - 500	80 - 500	88 - 530				80 - 100	88 - 108	88 - 530	80 - 500		088 - 530
TMFN 500-600	500 - 600	530 - 630				100 - 120	106-126	530 - 630	500-600		530 - 630
TMFN 600-750	600 - 750	670 - 800						670 - 800	600-750		670 - 800

Additional wrenches available upon request:

TMHN 7 sets for smaller self-aligning ball bearings, spherical roller or CARB bearings. Sizes 5-11 depending on series
HNA adjustable spanners - can accommodate more sizes per wrench. HNA 1 - 4, 5 - 8, 14 - 24.

HN..SNL specially designed for use with SNL blocks. All sizes from 5 to 32.
TMFS axial lock nut socket sets (Metric dimensions only) sizes 0 to 20.

Locking Washers
10 - 95 mm

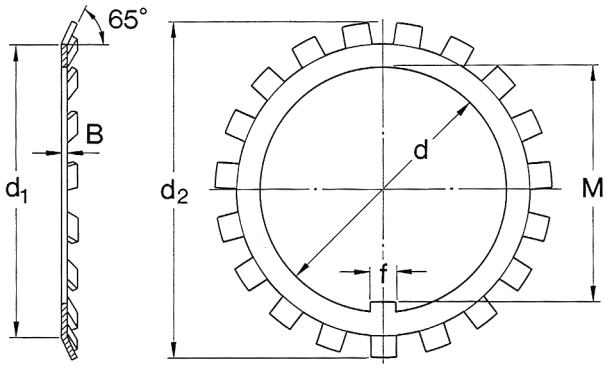

MB 0 - MB 19

Dimensions						Mass	Designation
d	d_1	d_2	B	f	M		
mm/in						g/oz	
10 0.3937	13.5 0.531	21 0.827	1 0.039	3 0.118	8.5 0.335	1.0 0.035	**MB 0**
12 0.4724	17 0.669	25 0.984	1 0.039	3 0.118	10.5 0.413	2.0 0.070	**MB 1**
15 0.5906	21 0.827	28 1.102	1 0.039	4 0.157	13.5 0.531	3.0 0.106	**MB 2**
17 0.6693	24 0.945	32 1.260	1 0.039	4 0.157	15.5 0.610	3.0 0.106	**MB 3**
20 0.7874	26 1.024	36 1.417	1 0.039	4 0.157	18.5 0.728	4.0 0.140	**MB 4**
25 0.9842	32 1.260	42 1.653	1.25 0.049	5 0.197	23 0.905	6.0 0.210	**MB 5**
30 1.1811	38 1.496	49 1.929	1.25 0.049	5 0.197	27.5 1.083	8.0 0.280	**MB 6**
35 1.3780	44 1.732	57 2.244	1.25 0.049	6 0.236	32.5 1.279	11 0.390	**MB 7**
40 1.5748	50 1.968	62 4.441	1.25 0.049	6 0.236	37.5 1.476	13 0.460	**MB 8**
45 1.7716	56 2.205	69 2.716	1.25 0.049	6 0.236	42.5 1.673	15 0.530	**MB 9**

Dimensions						Mass	Designation
d	d_1	d_2	B	f	M		
mm/in						g/oz	
50 1.9685	61 2.401	74 2.913	1.25 0.049	6 0.236	47.5 1.870	16 0.56	**MB 10**
55 2.1653	67 2.638	81 3.189	1.25 0.049	8 0.315	52.5 2.067	22 0.70	**MB 11**
60 2.3622	73 2.874	86 3.386	1.5 0.059	8 0.315	57.5 2.264	24 0.88	**MB 12**
65 2.5590	79 3.110	92 3.622	1.5 0.059	8 0.315	62.5 2.460	30 1.02	**MB 13**
70 2.7559	85 3.346	98 3.858	1.5 0.059	8 0.315	66.5 2.618	32 1.16	**MB 14**
75 2.9527	90 3.543	104 4.094	1.5 0.059	8 0.315	71.5 2.815	35 1.27	**MB 15**
80 3.1496	95 3.740	112 4.409	1.75 0.069	10 0.394	76.5 3.012	46 1.62	**MB 16**
85 3.3464	102 4.016	119 4.685	1.75 0.069	10 0.394	81.5 3.209	53 1.83	**MB 17**
90 3.5433	108 4.252	126 4.961	1.75 0.069	10 0.394	86.5 3.405	61 2.18	**MB 18**
95 3.7401	113 4.449	133 5.236	1.75 0.069	10 0.394	91.5 3.602	66 2.36	**MB 19**

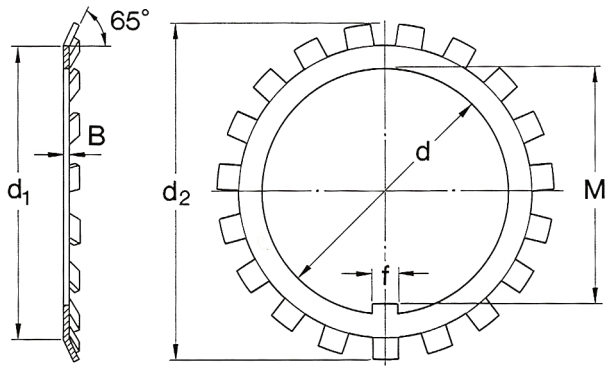

MB 20 - MB 56

Dimensions						Mass	Designation
d	d_1	d_2	B	f	M		
mm/in						g/oz	
100	120	142	1.75	12	96.5	77	**MB 20**
3.9370	4.724	5.590	0.069	0.472	3.799	2.72	
105	126	145	1.75	12	100.5	83	**MB 21**
4.1338	4.961	5.709	0.069	0.472	3.957	2.93	
110	133	154	1.75	12	105.5	91	**MB 22**
4.3307	5.236	6.063	0.069	0.472	4.153	3.21	
115	137	159	2	12	110.5	107	**MB 23**
4.5275	5.394	6.260	0.079	0.472	4.350	3.78	
120	138	164	2	14	115	108	**MB 24**
4.7244	5.433	6.457	0.079	0.551	4.527	3.81	
125	148	170	2	14	120	115	**MB 25**
4.9212	5.827	6.693	0.079	0.551	4.724	4.06	
130	149	175	2	14	125	115	**MB 26**
5.1181	5.866	6.890	0.079	0.551	4.921	4.06	
135	160	185	2	14	130	140	**MB 27**
5.3150	6.299	7.283	0.079	0.551	5.118	4.94	
140	160	192	2	16	135	135	**MB 28**
5.5118	6.299	7.559	0.079	0.630	5.315	4.77	
145	172	202	2	16	140	165	**MB 29**
5.7087	6.772	7.953	0.079	0.630	5.512	5.82	
150	171	205	2	16	145	180	**MB 30**
5.9055	6.7323	8.071	0.079	0.630	5.709	6.35	

Dimensions						Mass	Designation
d	d_1	d_2	B	f	M		
mm/in						g/oz	
155	182	212	2.5	16	147.5	200	**MB 31**
6.1024	7.165	8.346	0.098	0.630	5.807	7.06	
160	182	217	2.5	18	154	215	**MB 32**
6.2992	7.165	8.543	0.098	0.709	6.063	7.59	
165	193	222	2.5	18	157.5	240	**MB 33**
6.4960	7.598	8.740	0.098	0.709	6.201	8.46	
170	193	232	2.5	18	164	240	**MB 34**
6.6929	7.598	9.134	0.098	0.709	6.457	8.46	
180	203	242	2.5	20	174	260	**MB 36**
7.0866	7.992	9.527	0.098	0.787	6.850	9.18	
190	214	252	2.5	20	184	260	**MB 38**
7.4803	8.425	9.921	0.098	0.787	7.244	9.18	
200	226	262	2.5	20	194	280	**MB 40**
7.8740	8.898	10.315	0.098	0.787	7.638	9.88	
220	250	292	3	24	213	350	**MB 44**
8.6614	9.842	11.496	0.118	0.945	8.386	12.36	
240	270	312	3	24	233	450	**MB 48**
9.4488	10.630	12.283	0.118	0.945	9.173	15.89	
260	300	342	3	28	253	650	**MB 52**
10.2362	11.811	13.464	0.118	1.102	9.961	22.95	
280	320	362	3	28	273	1050	**MB 56**
11.0236	12.598	14.252	0.118	1.102	10.748	37.07	

Locking Washers
0.406 - 4.192 in

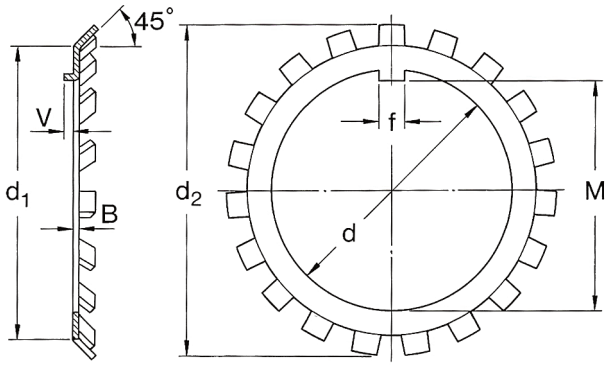

W 00 - W 21

Dimensions							Mass	Designation
d	d_1	d_2	B	f	M	V		
mm/in							g/oz	
0.406	0.625	0.875	0.032	0.120	0.334	0.062	2	**W 00**
10.31	15.88	22.22	0.81	3.05	8.48	1.57	0.07	
0.484	0.719	1.016	0.032	0.120	0.412	0.062	2	**W 01**
12.29	18.26	25.81	0.81	3.05	10.46	1.57	0.07	
0.601	0.813	1.156	0.032	0.120	0.529	0.062	3	**W 02**
15.27	20.65	29.36	0.81	3.05	13.44	1.57	0.10	
0.679	0.938	1.328	0.032	0.120	0.607	0.062	5	**W 03**
17.25	23.83	33.73	0.81	3.05	15.42	1.57	0.17	
0.801	1.125	1.531	0.032	0.176	0.729	0.062	7	**W 04**
20.34	28.58	38.89	0.81	4.47	18.52	1.57	0.25	
0.989	1.281	1.719	0.040	0.176	0.909	0.094	8	**W 05**
25.12	32.54	43.66	1.02	4.47	23.09	2.39	0.28	
1.193	1.500	1.922	0.040	0.176	1.093	0.094	8	**W 06**
30.30	38.10	48.82	1.02	4.47	27.76	2.39	0.28	
1.396	1.813	2.250	0.040	0.176	1.296	0.094	14	**W 07**
35.46	46.05	57.15	1.02	4.47	32.92	2.39	0.49	
1.583	2.000	2.469	0.048	0.290	1.475	0.094	19	**W 08**
40.21	50.80	62.71	1.22	7.37	37.46	2.39	0.67	
1.792	2.281	2.734	0.048	0.290	1.684	0.125	21	**W 09**
45.52	57.94	69.44	1.22	7.37	42.77	3.18	0.74	
1.992	2.438	2.922	0.048	0.290	1.884	0.125	20	**W 10**
50.60	61.92	74.22	1.22	7.37	47.85	3.18	0.70	

Dimensions							Mass	Designation
d	d_1	d_2	B	f	M	V		
mm/in							g/oz	
2.182	2.656	3.109	0.053	0.290	2.069	0.125	22	**W 11**
55.42	67.46	78.96	1.35	7.37	52.55	3.18	0.77	
2.400	2.844	3.344	0.053	0.290	2.267	0.125	25	**W 12**
60.96	72.24	84.94	1.35	7.37	57.58	3.18	0.88	
2.588	3.063	3.578	0.053	0.290	2.455	0.125	27	**W 13**
65.74	77.80	90.88	1.35	7.37	62.36	3.18	0.95	
2.791	3.313	3.828	0.053	0.290	2.658	0.188	32	**W 14**
70.89	84.15	97.23	1.35	7.37	67.51	4.77	1.13	
2.973	3.563	4.109	0.062	0.290	2.831	0.188	48	**W 15**
75.51	90.50	104.37	1.57	7.37	71.91	4.77	1.69	
3.177	3.844	4.375	0.062	0.353	3.035	0.188	53	**W 16**
80.70	97.64	111.12	1.57	8.97	77.09	4.77	1.87	
3.395	4.031	4.625	0.062	0.353	3.253	0.188	57	**W 17**
86.23	102.39	117.48	1.57	8.97	82.63	4.77	2.01	
3.582	4.281	4.938	0.084	0.353	3.418	0.188	70	**W 18**
90.98	108.74	125.42	2.13	8.97	86.82	4.77	2.47	
3.800	4.563	5.219	0.084	0.353	3.636	0.188	82	**W 19**
96.52	115.90	132.56	2.13	8.97	92.35	4.77	2.89	
3.988	4.813	5.500	0.084	0.353	3.809	0.250	94	**W 20**
101.30	122.25	139.70	2.13	8.97	96.75	6.35	3.31	
4.192	5.000	5.703	0.084	0.353	4.013	0.250	100	**W 21**
106.48	127.00	144.86	2.13	8.97	101.93	6.35	3.53	

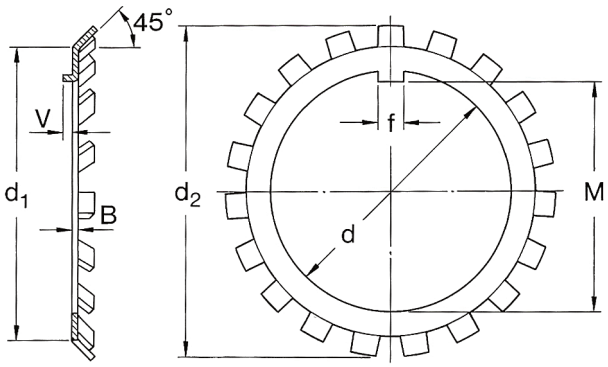

W 22 - W 44

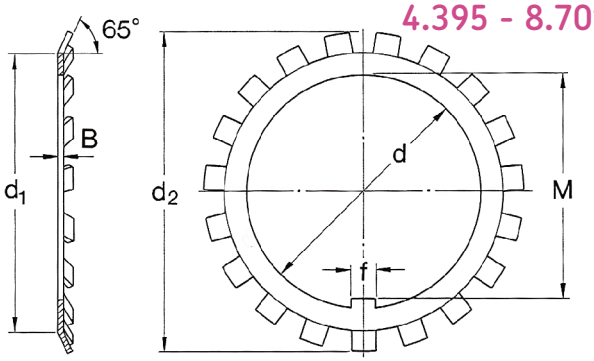

W 022 - W 044

Dimensions							Mass	Designation
d	d_1	d_2	B	f	M	V		
mm/in							g/oz	
4.395	4.921	5.688	0.115	0.350	4.185	-	94	**W 022**
111.63	124.99	144.47	2.92	8.89	106.3	-	3.31	
4.395	5.281	6.063	0.115	0.353	4.185	0.250	157	**W 22**
111.63	134.14	154.00	2.92	8.97	106.30	6.35	5.54	
4.801	5.333	6.188	0.115	0.350	4.591	-	104	**W 024**
121.94	135.46	157.17	2.92	8.89	116.6	-	3.67	
4.801	5.688	6.469	0.115	0.353	4.591	0.250	170	**W 24**
121.94	144.47	164.31	2.92	8.97	116.6	6.35	6.00	
5.191	5.723	6.625	0.115	0.469	4.961	-	126	**W 026**
131.85	145.36	168.27	2.92	11.9	126	-	4.44	
5.191	6.188	7.031	0.115	0.435	4.961	0.250	220	**W 26**
131.85	157.18	178.59	2.92	11.1	126	6.35	7.76	
5.582	6.129	7.094	0.115	0.594	5.352	-	154	**W 028**
141.78	155.67	180.19	2.92	15.1	135.9	-	5.43	
5.582	6.531	7.438	0.115	0.590	5.352	0.250	220	**W 28**
141.78	165.89	188.92	2.92	15	135.9	6.35	7.76	
5.983	6.708	7.719	0.115	0.594	5.722	-	190	**W 030**
151.97	170.38	196.06	2.92	15.1	145.3	-	6.70	
5.983	7.063	8.063	0.146	0.590	5.722	0.313	328	**W 30**
151.97	179.40	204.80	3.71	15	145.3	7.95	11.6	
6.389	7.114	8.156	0.115	0.594	6.128	-	200	**W 032**
162.28	180.70	207.16	2.92	15.1	155.7	-	7.05	

Dimensions							Mass	Designation
d	d_1	d_2	B	f	M	V		
mm/in							g/oz	
6.389	7.438	8.438	0.146	0.590	6.128	0.313	335	**W 32**
162.28	188.92	214.32	3.71	14.99	155.65	7.95	11.8	
6.764	7.508	8.594	0.115	0.719	6.503	-	232	**W 034**
171.81	190.70	218.29	2.92	18.26	165.18	-	8.18	
6.764	8.031	9.063	0.146	0.715	6.503	0.313	417	**W 34**
171.81	203.99	230.20	3.71	18.16	165.18	7.95	14.7	
7.171	7.899	9.000	0.115	0.719	6.910	-	238	**W 036**
182.14	200.63	228.60	2.92	18.26	175.51	-	8.39	
7.171	8.375	9.438	0.146	0.715	6.910	0.313	432	**W 36**
182.14	212.72	239.72	3.71	18.16	175.51	7.95	15.2	
7.577	8.290	9.438	0.115	0.719	7.316	-	246	**W 038**
192.46	210.57	239.72	2.92	18.26	185.83	-	8.68	
7.577	8.781	9.875	0.146	0.715	7.316	0.313	458	**W 38**
192.46	223.04	250.82	3.71	18.16	185.83	7.95	16.1	
7.982	8.774	9.969	0.115	0.844	7.721	-	294	**W 040**
202.74	222.86	253.21	2.92	21.44	196.11	-	10.4	
7.982	9.156	10.313	0.146	0.840	7.721	0.313	470	**W 40**
202.74	232.56	261.95	3.71	21.34	196.11	7.95	16.6	
8.701	9.570	10.406	0.115	0.945	8.327	-	300	**W 044**
221.01	243.08	264.31	2.92	24.00	211.51	-	10.6	
8.701	9.875	11.438	0.146	0.940	8.327	-	600	**W 44** [1]
221.01	250.82	290.52	3.71	23.88	211.51	-	21.1	

[1] Locking washer angle 65°

Hydraulic Nuts - HMV Series (Metric Thread)
HMV 10E - HMV 27E

All HMV nuts are manufactured with BSP 1/4" connection thread and are supplied with quick connection nipple 729832A and nipple 729106 (Male BSP 1/4" and Female NPT 3/8")

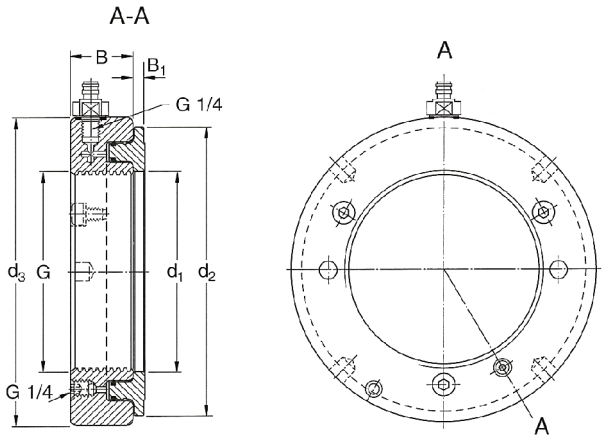

Dimensions						Axial Displacement	Piston Area	Mass	Designation
G	d_1	d_2	d_3	B	B_1		Max.		
mm	mm/in						mm^2/in^2	kg/lb	
M 50x1.5	50.5	104	114	38	4	5	2 900	2.70	**HMV 10E**
	1.988	4.094	4.488	1.496	0.157	0.197	4.5	5.95	
M 60x2	60.5	115	125	38	5	5	3 300	2.80	**HMV 12E**
	2.382	4.527	4.921	1.496	0.197	0.197	5.1	6.17	
M 65x2	65.5	121	130	38	5	5	3 600	3.00	**HMV 13E**
	2.578	4.764	5.118	1.496	0.197	0.197	5.6	6.61	
M 70x2	70.5	127	135	38	5	5	3 800	3.20	**HMV 14E**
	2.775	5.000	5.315	1.496	0.197	0.197	5.9	7.05	
M 75x2	75.5	132	140	38	5	5	4 000	3.40	**HMV 15E**
	2.972	5.197	5.512	1.496	0.197	0.197	6.2	7.49	
M 80x2	80.5	137	146	38	5	5	4 200	3.70	**HMV 16E**
	3.169	5.394	5.748	1.496	0.197	0.197	6.5	8.16	
M 85x2	85.5	142	150	38	5	5	4 400	3.75	**HMV 17E**
	3.366	5.590	5.906	1.496	0.197	0.197	6.8	8.27	
M 90x2	90.5	147	156	38	5	5	4 700	4.00	**HMV 18E**
	3.563	5.787	6.142	1.496	0.197	0.197	7.3	8.82	
M 95x2	95.5	153	162	38	5	5	4 900	4.30	**HMV 19E**
	3.760	6.024	6.378	1.496	0.197	0.197	7.6	9.48	
M 100x2	100.5	158	166	38	6	5	5 100	4.40	**HMV 20E**
	3.957	6.220	6.535	1.496	0.236	0.197	7.9	9.70	
M 105x2	105.5	163	172	38	6	5	5 300	4.65	**HMV 21E**
	4.153	6.417	6.772	1.496	0.236	0.197	8.2	10.25	
M 110x2	110.5	169	178	38	6	5	5 600	4.95	**HMV 22E**
	4.350	6.654	7.008	1.496	0.236	0.197	8.7	10.91	
M 115x2	115.5	174	182	38	6	5	5 800	5.00	**HMV 23E**
	4.547	6.850	7.165	1.496	0.236	0.197	9.0	11.02	
M 120x2	120.5	179	188	38	6	5	6 000	5.25	**HMV 24E**
	4.744	7.047	7.401	1.496	0.236	0.197	9.3	11.57	
M 125x2	125.5	184	192	38	6	5	6 200	5.35	**HMV 25E**
	4.941	7.244	7.560	1.496	0.236	0.197	9.6	11.79	
M 130x2	130.5	190	198	38	6	5	6 400	5.65	**HMV 26E**
	5.138	6.693	7.795	1.496	0.236	0.197	9.9	12.46	
M 135x2	135.5	195	204	38	6	5	6 600	5.90	**HMV 27E**
	5.335	6.677	8.031	1.496	0.236	0.197	10.2	13.00	

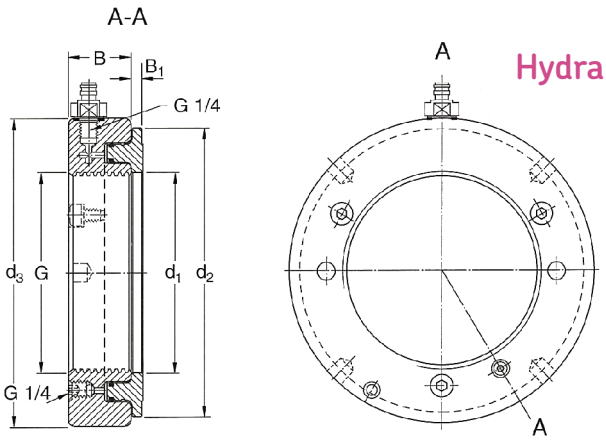

Hydraulic Nuts - HMV Series (Metric Thread)
HMV 28E - HMV 47E

All HMV nuts are manufactured with BSP 1/4" connection thread and are supplied with quick connection nipple 729832A and nipple 729106 (Male BSP 1/4" and Female NPT 3/8")

Dimensions						Axial Displacement	Piston Area	Mass	Designation
G	d_1	d_2	d_3	B	B_1		Max.		
mm	mm/in						mm^2/in^2	kg/lb	
M 140x2	140.5	200	208	38	7	5	6 800	6.00	**HMV 28E**
	5.531	7.874	8.189	1.496	0.276	0.197	10.5	13.22	
M 145x2	145.5	206	214	39	7	5	7 300	6.50	**HMV 29E**
	5.728	8.110	8.425	1.535	0.276	0.197	11.3	14.33	
M 150x2	150.5	211	220	39	7	5	7 500	6.60	**HMV 30E**
	5.925	8.307	8.661	1.535	0.276	0.197	11.6	14.55	
M 155x3	155.5	218	226	39	7	5	8 100	6.95	**HMV 31E**
	6.122	8.583	8.898	1.535	0.276	0.197	12.6	15.32	
M 160x3	160.5	224	232	40	7	6	8 600	7.60	**HMV 32E**
	6.319	8.819	9.134	1.575	0.276	0.236	13.3	16.75	
M 165x3	165.5	229	238	40	7	6	8 900	7.90	**HMV 33E**
	6.516	9.016	9.370	1.575	0.276	0.236	13.8	17.42	
M 170x3	170.5	235	244	41	7	6	9 400	8.40	**HMV 34E**
	6.712	9.252	9.606	1.614	0.276	0.236	14.6	18.52	
M 180x3	180.5	247	256	41	7	6	10 300	9.15	**HMV 36E**
	7.106	9.724	10.079	1.614	0.276	0.236	16.0	20.17	
M 190x3	191	259	270	42	8	7	11 500	10.5	**HMV 38E**
	7.519	10.200	10.630	1.653	0.315	0.276	17.8	23.15	
M 200x3	201	271	282	43	8	8	12 500	11.5	**HMV 40E**
	7.913	10.669	11.102	1.693	0.315	0.315	19.4	25.35	
Tr 205x4	207	276	288	43	8	8	12 800	12.0	**HMV 41E**
	8.150	10.866	11.338	1.693	0.315	0.315	19.8	26.45	
Tr 210x4	212	282	294	44	8	9	13 400	12.5	**HMV 42E**
	8.346	11.102	11.575	1.732	0.315	0.354	20.8	27.60	
Tr 215x4	217	287	300	44	8	9	13 700	13.0	**HMV 43E**
	8.543	11.300	11.811	1.732	0.315	0.354	21.2	28.66	
Tr 220x4	222	293	306	44	8	9	14 400	13.5	**HMV 44E**
	8.740	11.535	12.047	1.732	0.315	0.354	22.3	29.76	
Tr 225x4	227	300	312	45	8	9	15 200	14.5	**HMV 45E**
	8.937	11.811	12.283	1.772	0.315	0.354	23.6	32.0	
Tr 230x4	232	305	318	45	8	9	15 500	14.5	**HMV 46E**
	9.134	12.010	12.520	1.772	0.315	0.354	24.0	32.0	
Tr 235x4	237	311	326	46	8	10	16 200	16.0	**HMV 47E**
	9.330	12.244	12.835	1.811	0.315	0.394	25.1	35.3	

Hydraulic Nuts - HMV Series (Metric Thread)
HMV 48E - HMV 76E

All HMV nuts are manufactured with BSP 1/4" connection thread and are supplied with quick connection nipple 729832A and nipple 729106 (Male BSP 1/4" and Female NPT 3/8")

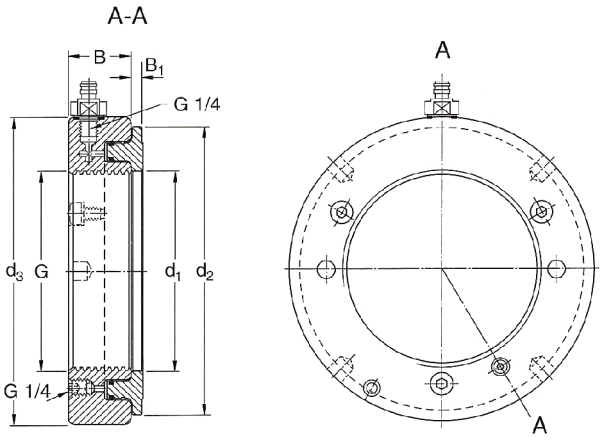

Dimensions						Axial Displacement	Piston Area	Mass	Designation
G	d_1	d_2	d_3	B	B_1		Max.		
mm	mm/in						mm^2/in^2	kg/lb	
Tr 240x4	242	316	330	46	9	10	16 500	16.0	**HMV 48E**
	9.527	12.441	12.992	1.811	0.354	0.394	25.6	35.3	
Tr 250x4	252	329	342	46	9	10	17 600	17.5	**HMV 50E**
	9.921	12.953	13.464	1.811	0.354	0.394	27.3	38.6	
Tr 260x4	262	341	356	47	9	11	18 800	19.0	**HMV 52E**
	10.315	13.425	14.016	1.850	0.354	0.433	29.1	41.9	
Tr 270x4	272	352	368	48	9	12	19 800	20.5	**HMV 54E**
	10.709	13.858	14.488	1.890	0.354	0.472	30.7	45.2	
Tr 280x4	282	363	380	49	9	12	21 100	22.0	**HMV 56E**
	11.102	14.291	14.960	1.929	0.354	0.472	32.7	48.5	
Tr 290x4	292	375	390	49	9	13	22 400	22.5	**HMV 58E**
	11.469	14.764	15.354	1.929	0.354	0.512	34.7	49.6	
Tr 300x4	302	386	404	51	9	14	23 600	25.5	**HMV 60E**
	11.889	15.197	15.905	2.008	0.394	0.551	36.6	56.2	
Tr 310x5	312	397	416	52	10	14	24 900	27.0	**HMV 62E**
	12.283	15.630	16.378	2.047	0.394	0.551	38.6	59.5	
Tr 320x5	322	409	428	53	10	14	26 300	29.5	**HMV 64E**
	12.677	16.102	16.850	2.087	0.394	0.551	40.8	65.0	
Tr 330x5	332	419	438	53	10	14	27 000	30.0	**HMV 66E**
	13.071	16.496	17.244	2.087	0.394	0.551	41.8	66.1	
Tr 340x5	342	430	450	54	10	14	28 400	31.5	**HMV 68E**
	13.464	16.929	17.716	2.126	0.394	0.551	44.0	69.4	
Tr 345x5	347	436	456	54	10	14	29 400	32.5	**HMV 69E**
	13.661	17.165	17.952	2.126	0.394	0.551	45.6	71.65	
Tr 350x5	352	442	464	56	10	14	29 900	35.0	**HMV 70E**
	13.858	17.402	18.268	2.205	0.394	0.551	46.3	77.1	
Tr 360x5	362	455	472	56	10	15	31 300	35.5	**HMV 72E**
	14.252	17.913	18.583	2.205	0.394	0.590	48.5	78.3	
Tr 365x5	367	460	482	57	11	15	31 700	38.5	**HMV 73E**
	14.449	18.110	18.976	2.244	0.433	0.590	49.1	84.9	
Tr 370x5	372	466	486	57	11	16	32 800	39.0	**HMV 74E**
	14.646	18.346	19.134	2.244	0.433	0.630	50.8	86.0	
Tr 380x5	382	476	498	58	11	16	33 500	40.5	**HMV 76E**
	15.040	18.740	19.606	2.283	0.433	0.630	51.9	89.3	

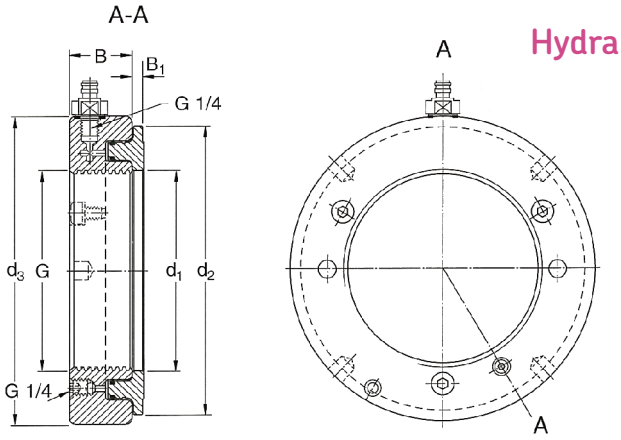

Hydraulic Nuts - HMV Series (Metric Thread)
HMV 77E - HMV 110E

All HMV nuts are manufactured with BSP 1/4" connection thread and are supplied with quick connection nipple 729832A and nipple 729106 (Male BSP 1/4" and Female NPT 3/8")

Dimensions						Axial Displacement	Piston Area	Mass	Designation
G	d_1	d_2	d_3	B	B_1		Max.		
mm	mm/in						mm^2/in^2	kg/lb	
Tr 385x5	387	483	504	58	11	16	34 700	41.0	**HMV 77E**
	15.236	19.016	19.842	2.283	0.433	0.630	53.8	90.4	
Tr 400x5	402	499	522	60	11	17	36 700	45.5	**HMV 80E**
	15.827	19.646	20.551	2.362	0.433	0.669	56.9	100	
Tr 410x5	412	510	534	61	11	17	38 300	48.0	**HMV 82E**
	16.220	20.079	21.024	2.401	0.433	0.669	59.4	106	
Tr 420x5	422	522	546	61	11	17	40 000	50.0	**HMV 84E**
	16.614	20.551	21.497	2.401	0.433	0.669	62.0	110	
Tr 430x5	432	532	556	62	11	17	40 800	52.5	**HMV 86E**
	17.008	20.945	21.890	2.441	0.433	0.669	63.2	116	
Tr 440x5	442	543	566	62	12	17	42 500	54.0	**HMV 88E**
	17.401	21.378	22.283	2.441	0.472	0.669	65.9	119	
Tr 450x5	452	554	580	64	12	17	44 100	57.5	**HMV 90E**
	17.795	21.811	22.835	2.520	0.472	0.669	68.4	127	
Tr 460x5	462	565	590	64	12	17	45 100	60.0	**HMV 92E**
	18.189	22.244	23.228	2.520	0.472	0.669	69.9	132	
Tr 470x5	472	576	602	65	12	18	46 900	62.0	**HMV 94E**
	18.583	22.677	23.700	2.559	0.472	0.709	72.7	137	
Tr 480x5	482	587	612	65	12	19	48 600	63.0	**HMV 96E**
	18.976	23.11	24.094	2.559	0.472	0.748	75.3	139	
Tr 490x5	492	597	624	66	12	19	49 500	66.0	**HMV 98E**
	19.370	23.504	24.567	2.598	0.472	0.748	76.7	145	
Tr 500x5	502	609	636	67	12	19	51 500	70.0	**HMV 100E**
	19.764	23.976	25.039	2.638	0.472	0.748	79.8	754	
Tr 510x6	512	624	648	68	12	20	53 300	74.0	**HMV 102E**
	20.157	24.567	25.512	2.677	0.472	0.787	82.6	163	
Tr 520x6	522	634	658	68	13	20	54 300	75.0	**HMV 104E**
	20.551	24.961	25.905	2.677	0.512	0.787	84.2	165	
Tr 530x6	532	645	670	69	13	21	56 200	79.0	**HMV 106E**
	20.945	25.394	26.378	2.716	0.512	0.827	87.1	174	
Tr 540x6	542	657	682	69	13	21	58 200	81.0	**HMV 108E**
	21.388	25.866	26.850	2.716	0.512	0.827	90.2	179	
Tr 550x6	552	667	693	70	13	21	59 200	84.0	**HMV 110E**
	21.732	26.26	27.283	2.756	0.512	0.827	91.8	185	

Metric Sleeves
d_1 17 - 55 mm

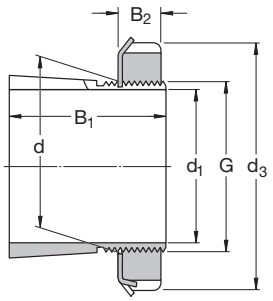

H

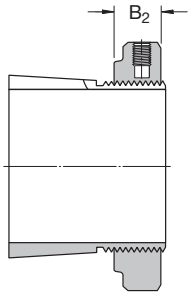

H..E

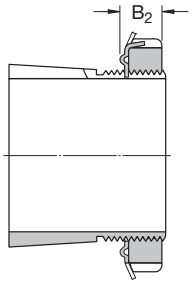

H..C

Dimensions						Mass	Designations				
d_1	d	d_3	B_1	B_2	G		Adptr. sleeve with lock nut and locking device	Lock nut	Locking device	Hydraulic nut	Bearing(s)
mm						kg					
17	20	32	24	7	M 20x1	0.036	**H 204**	KM 4	MB 4	–	1204 EK
	20	32	28	7	M 20x1	0.04	**H 304**	KM 4	MB 4	–	2204 EK, 1304 EK
20	25	38	26	8	M 25x1.5	0.064	**H 205**	KM 5	MB 5	–	1205 EK
	25	38	29	8	M 25x1.5	0.071	**H 305**	KM 5	MB 5	–	2205 EK, 1305 EK, 22205 EK
	25	38	29	8.5	M 25x1.5	0.071	**H 305 C**	KM 5	MB 5 C	–	2205 E-2RS1KTN9
	25	38	29	10.5	M 25x1.5	0.076	**H 305 E**	KMFE 5	–	–	
25	30	45	27	8	M 30x1.5	0.086	**H 206**	KM 6	MB 6	–	1206 EK
	30	45	31	8	M 30x1.5	0.095	**H 306**	KM 6	MB 6	–	2206 EK, 1306 EK, 22206 EK
	30	45	31	8.5	M 30x1.5	0.095	**H 306 C**	KM 6	MB 6 C	–	2206 E-2RS1KTN9
	30	45	31	10.5	M 30x1.5	0.11	**H 306 E**	KMFE 6	–	–	C 2206 KTN9, C 2206 KV
	30	45	38	8	M 30x1.5	0.11	**H 2306**	KM 6	MB 6	–	2306 K
30	35	52	29	9	M 35x1.5	0.12	**H 207**	KM 7	MB 7	–	1207 EK
	35	52	35	9	M 35x1.5	0.14	**H 307**	KM 7	MB 7	–	2207 EK, 1307 EK, 22207 EK
	35	52	35	9.5	M 35x1.5	0.14	**H 307 C**	KM 7	MB 7 C	–	2207 E-2RS1KTN9
	35	52	35	11.5	M 35x1.5	0.15	**H 307 E**	KMFE 7	–	–	C 2207 KTN9, C 2207 KV
	35	52	43	9	M 35x1.5	0.16	**H 2307**	KM 7	MB 7	–	2307 EK
35	40	58	31	10	M 40x1.5	0.16	**H 208**	KM 8	MB 8	–	1208 EK
	40	58	36	10	M 40x1.5	0.17	**H 308**	KM 8	MB 8	–	2208 EK, 1308 EK, 22208 EK, 21308 CCK,C2208 KV
	40	58	36	10.5	M 40x1.5	0.17	**H 308 C**	KM 8	MB 8 C	–	2208 E-2RS1KTN9
	40	58	36	13	M 40x1.5	0.19	**H 308 E**	KMFE 8	–	–	C2208 KTN9
	40	58	46	10	M 40x1.5	0.22	**H 2308**	KM 8	MB 8	–	2308 EK, 22308 EK
40	45	65	33	11	M 45x1.5	0.21	**H 209**	KM 9	MB 9	–	1209 EK
	45	65	39	11	M 45x1.5	0.23	**H 309**	KM 9	MB 9	–	2209 EK, 1309 EK, 22209 EK, 21309 CCK
	45	65	39	11.5	M 45x1.5	0.23	**H 309 C**	KM 9	MB 9 C	–	2209 E-2RS1KTN9
	45	65	39	13	M 45x1.5	0.24	**H 309 E**	KMFE 9	–	–	C 2209 KTN9, C2209 KV
	45	65	50	11	M 45x1.5	0.27	**H 2309**	KM 9	MB 9	–	2309 EK, 22309 EK
45	50	70	35	12	M 50x1.5	0.24	**H 210**	KM 10	MB 10	HMV 10 E	1210 EK
	50	70	42	12	M 50x1.5	0.27	**H 310**	KM 10	MB 10	HMV 10 E	2210 EK, 1310 EK, 22210 EK, 21310 CCK
	50	70	42	12.5	M 50x1.5	0.27	**H 310 C**	KM 10	MB 10 C	HMV 10 E	2210-2RS1KTN9
	50	70	42	14	M 50x1.5	0.3	**H 310 E**	KMFE 10	–	HMV 10 E	C 2210 KTN9, C 2210 KV
	50	70	55	12	M 50x1.5	0.34	**H 2310**	KM 10	MB 10	HMV 10 E	2310 K, 22310 EK
50	55	75	37	12.5	M 55x2	0.28	**H 211**	KM 11	MB 11	HMV 11 E	1211 EK
	55	75	45	12.5	M 55x2	0.32	**H 311**	KM 11	MB 11	HMV 11 E	2211 EK, 1311 EK, 22211 EK, 21311 CCK
	55	75	45	13	M 55x2	0.32	**H 311 C**	KM 11	MB 11 C	HMV 11 E	2211 E-2RS1KTN9
	55	75	45	14	M 55x2	0.34	**H 311 E**	KMFE 11	–	HMV 11 E	C 2211 KTN9, C2211 KV
	55	75	59	12.5	M 55x2	0.39	**H 2311**	KM 11	MB 11	HMV 11 E	2311 K, 22311 EK
55	60	80	38	13	M 60x2	0.31	**H 212**	KM 12	MB 12	HMV 12 E	1212 EK
	60	80	47	13	M 60x2	0.36	**H 312**	KM 12	MB 12	HMV 12 E	2212 EK, 1312 EK, 22212 EK, 21312 CCK, C 2212 KV
	60	80	47	14	M 60x2	0.4	**H 312 E**	KMFE 12	–	HMV 12 E	C 2212 KTN9
	60	80	62	13	M 60x2	0.45	**H 2312**	KM 12	MB 12	HMV 12 E	2312 K, 22312 EK

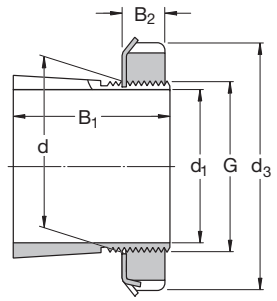

H, H..L

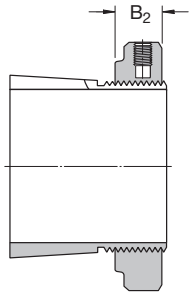

H..E

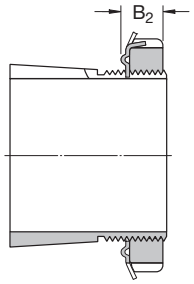

H..C

Dimensions						Mass	Designations Adptr. sleeve with lock nut and locking device	Lock nut	Locking device	Hydraulic nut	Bearing(s)
d_1	d	d_3	B_1	B_2	G						
mm						kg					
60	65	85	40	14	M 65x2	0.36	**H 213**	KM 13	MB 13	HMV 13 E	1213 EK
	65	85	50	14	M 65x2	0.42	**H 313**	KM 13	MB 13	HMV 13 E	2213 EK, 1313 EK, 22213 EK, 21213 CCK, C 2213 KV
	65	85	50	15	M 65x2	0.42	**H 313 C**	KM 13	MB 13 C	HMV 13 E	22213 E-2RS1KTN9
	65	85	50	15	M 65x2	0.43	**H 313 E**	KMFE 13	–	HMV 13 E	C 2213 KTN9
	65	85	65	14	M 65x2	0.52	**H 2313**	KM 13	MB 13	HMV 13 E	2313 K, 22313 EK
	70	92	52	14	M 70x2	0.67	**H 314**	KM 14	MB 14	HMV 14 E	22214EK, 21314 CCK,C 2214 KV
	70	92	52	15	M 70x2	0.67	**H 314 E**	KMFE 14	–	HMV 14 E	C 2214 KTN9
	70	92	68	14	M 70x2	0.88	**H 2314**	KM 14	MB 14	HMV 14 E	22314 EK, C 2314 K
65	75	98	43	15	M 75x2	0.66	**H 215**	KM 15	MB 15	HMV 15 E	1215 K
	75	98	55	15	M 75x2	0.78	**H 315**	KM 15	MB 15	HMV 15 E	2215 K, 1315 K, 22215 EK, 21315 CCK, C 2215 KV
	75	98	55	16	M 75x2	0.8	**H 315 E**	KMFE 15	–	HMV 15 E	C 2215 K
	75	98	73	15	M 75x2	1.1	**H 2315**	KM 15	MB 15	HMV 15 E	2315 K, 22315 EK, C 2315 K
70	80	105	46	17	M 80x2	0.81	**H 216**	KM 16	MB 16	HMV 16 E	1216 K
	80	105	59	17	M 80x2	0.95	**H 316**	KM 16	MB 16	HMV 16 E	2216 EK, 1316 K, 22216 EK, 21316 CCK. C 2216 KV
	80	105	59	18	M 80x2	1.01	**H 316 E**	KMFE 16	–	HMV 16 E	C 2216 K
	80	105	78	17	M 80x2	1.2	**H 2316**	KM 16	MB 16	HMV 16 E	2316 K, 22316 EK, C 2316 K
75	85	110	50	18	M 85x2	0.94	**H 217**	KM 17	MB 17	HMV 17 E	1217 K
	85	110	63	18	M 85x2	1.1	**H 317**	KM 17	MB 17	HMV 17 E	2217 K, 1317 K, 22217 EK, 21317 CCK, C 2217 KV
	85	110	63	19	M 85x2	1.17	**H 317 E**	KMFE 17	–	HMV 17 E	C 2217 K
	85	110	82	18	M 85x2	1.35	**H 2317**	KM 17	MB 17	HMV 17 E	2317 K, 22317 EK, C 2317 K
80	90	120	52	18	M 90x2	1.1	**H 218**	KM 18	MB 18	HMV 18 E	1218 K
	90	120	65	18	M 90x2	1.3	**H 318**	KM 18	MB 18	HMV 18 E	2218 K, 1318 K, 22218 EK, 21318 CCK, C2218 KV
	90	120	65	19	M 90x2	1.43	**H 318 E**	KMFE 18	–	HMV 18 E	C 2218 K
	90	120	86	18	M 90x2	1.6	**H 2318**	KM 18	MB 18	HMV 18 E	2318 K, 23218 CCK/W33, 22318 EK, C2318 K
85	95	125	55	19	M 95x2	1.25	**H 219**	KM 19	MB 19	HMV 19 E	1219 K
	95	125	68	19	M 95x2	1.4	**H 319**	KM 19	MB 19	HMV 19 E	2219 K, 1319K, 22219 EK, 21319 CCK
	95	125	68	20	M 95x2	1.41	**H 319 E**	KMFE 19	–	HMV 19 E	C 2219 K
	95	125	90	19	M 95x2	1.8	**H 2319**	KM 19	MB 19	HMV 19 E	2319 K, 22319 EK, C 2319 K
90	100	130	58	20	M 100x2	1.4	**H 220**	KM 20	MB 20	HMV 20 E	1220 K
	100	130	71	20	M 100x2	1.6	**H 320**	KM 20	MB 20	HMV 20 E	2220 K, 1320 K, 22220 EK, 21320 CCK,
	100	130	71	21	M 100x2	1.72	**H 320 E**	KMFE 20	–	HMV 20 E	C 2220 K
	100	130	76	20	M 100x2	1.8	**H 3120**	KM 20	MB 20	HMV 20 E	23120 CCK/W33, C 3120 K, C3120 KV
	100	130	97	20	M 100x2	2	**H 2320**	KM 20	MB 20	HMV 20 E	2320 K, 23220 CCK/W33, 22320 EK, C2320 K
100	110	145	63	21	M 110x2	1.8	**H 222**	KM 22	MB 22	HMV 22 E	1222 K
	110	145	77	21	M 110x2	2.04	**H 322**	KM 22	MB 22	HMV 22 E	2222 K, 1322 K, 23022 CCK, 22222 EK, 21322 CCK
	110	145	77	21.5	M 110x2	2.11	**H 322 E**	KMFE 22	–	HMV 22 E	C 3022 K, C 2222 K
	110	145	81	21	M 110x2	2.1	**H 3122**	KM 22	MB 22	HMV 22 E	23122 CCK/W33
	110	145	105	21	M 110x2	2.75	**H 2322**	KM 22	MB 22	HMV 22 E	2322 K, 23222 CCK/W33, 22322 EK
110	120	145	72	22	M 120x2	1.8	**H 3024**	KML 24	MBL 24	HMV 24 E	1224 K, 23024 CCK/W33, C3024 K
	120	155	72	26	M 120x2	1.87	**H 3024 E**	KMFE 24	–	HMV 24 E	C 3024 K
	120	155	88	22	M 120x2	2.5	**H 3124**	KM 24	MB 24	HMV 24 E	23124 CCCK/W33, 22224 EK
	120	145	88	22	M 120x2	2.5	**H 3124 L**	KML 24	MBL 24	HMV 24 E	C 2224 K
	120	155	112	22	M 120x2	3	**H 2324**	KM 24	MB 24	HMV 24 E	23224 CCK/W33, 22324 CCK/W33
	120	145	112	22	M 120x2	3.12	**H 2324 L**	KML 24	MBL 24	HMV 24 E	C 3224 K

Metric Sleeves
d_1 115 - 180 mm

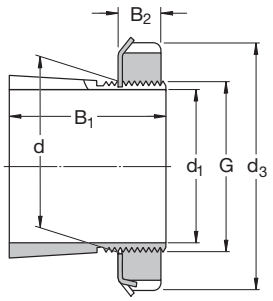

H, H..L

Dimensions						Mass	Designations				
d_1	d	d_3	B_1	B_2	G		Adptr. sleeve with lock nut and locking device	Lock nut	Locking device	Hydraulic nut	Bearing(s)
mm						kg					
115	130	155	80	23	M 130x2	2.8	**H 3026**	KML 26	MBL 26	HMV 26 E	23026 CCK/W33, C3026 K
	130	165	92	23	M 130x2	3.45	**H 3126**	KM 26	MB 26	HMV 26 E	23126 CCK/W33, 22226 EK
	130	155	92	23	M 130x2	3.65	**H 3126 L**	KML 26	MBL 26	HMV 26 E	C 2226 K
	130	165	121	23	M 130x2	4.45	**H 2326**	KM 26	MB 26	HMV 26 E	23226 CCK/W33, 22326 CCK/W33
125	140	165	82	24	M 140x2	3.05	**H 3028**	KML 28	MBL 28	HMV 28 E	23028 CCK/W33, C 3028 K
	140	180	97	24	M 140x2	4.1	**H 3128**	KM 28	MB 28	HMV 28 E	23128 CCK/W33, 22228 CCK/W33
	140	165	97	24	M 140x2	3.62	**H 3128 L**	KML 28	MBL 28	HMV 28 E	C 2228 K
	140	180	131	24	M 140x2	5.4	**H 2328**	KM 28	MB 28	HMV 28 E	23228 CCK/W33, 22328 CCK/W33
135	150	180	87	26	M 150x2	3.75	**H 3030**	KML 30	MBL 30	HMV 30 E	23030 CCK/W33
	150	195	111	26	M 150x2	5.25	**H 3130**	KM 30	MB 30	HMV 30 E	23130 CCK/W33, 22230 CCK/W33
	150	180	111	26	M 150x2	4.7	**H 3130 L**	KML 30	MBL 30	HMV 30 E	C 3130 K, 2230 K, C3130 K, C2230 K
	150	195	139	26	M 150x2	6.4	**H 2330**	KM 30	MB 30	HMV 30 E	23230 CCK/W33, 22330 CCK/W33
140	160	190	93	27.5	M 160x3	5.1	**H 3032**	KML 32	MBL 32	HMV 32 E	23032 CCK/W33, C3032 K
	160	210	119	27.5	M 160x3	7.25	**H 3132**	KM 32	MB 32	HMV 32 E	23132 CCK/W33, 22232 CCK/W33
	160	190	119	27.5	M 160x3	6.4	**H 3132 L**	KML 32	MBL 32	HMV 32 E	C 3132 K
	160	210	147	27.5	M 160x3	8.8	**H 2332**	KM 32	MB 32	HMV 32 E	23232 CCK/W33, 22332 CCK/W33
	160	190	147	27.5	M 160x3	7.95	**H 2332 L**	KML 32	MBL 32	HMV 32 E	C 3232 K
150	170	200	101	28.5	M 170x3	5.8	**H 3034**	KML 34	MBL 34	HMV 34 E	23034 CCK/W33, C 3034 K
	170	220	122	28.5	M 170x3	8.1	**H 3134**	KM 34	MB 34	HMV 34 E	23134 CCK/W33, 22234 CCK/W33
	170	200	122	28.5	M 170x3	7.15	**H 3134 L**	KML 34	MBL 34	HMV 34 E	C 3134 K, C2334 K
	170	220	154	28.5	M 170x3	9.9	**H 2334**	KM 34	MB 34	HMV 34 E	23234 CCK/W33, 22334 CCK/W33
160	180	210	87	29.5	M 180x3	5.7	**H 3936**	KML 36	MBL 36	HMV 36 E	23936 CCK/W33
	180	210	109	29.5	M 180x3	6.7	**H 3036**	KML 36	MBL 36	HMV 36 E	23036 CCK/W33, C3036 K
	180	230	131	29.5	M 180x3	9.15	**H 3136**	KM 36	MB 36	HMV 36 E	23136 CCK/W33, 22236 CCK/W33
	180	210	131	29.5	M 180x3	8.15	**H 3136 L**	KML 36	MBL 36	HMV 36 E	C 3136 K
	180	230	161	30	M 180x3	11	**H 2336**	KM 36	MB 36	HMV 36 E	23236 CCK/W33, 22336 CCK/W33, C3236 K
170	190	220	89	30.5	M 190x3	6.2	**H 3938**	KML 38	MBL 38	HMV 38 E	23938 CCK/W33
	190	220	112	30.5	M 190x3	7.25	**H 3038**	KML 38	MBL 38	HMV 38 E	23038 CCK/W33, C 3038 K
	190	240	141	30.5	M 190x3	10.5	**H 3138**	KM 38	MB 38	HMV 38 E	23138 CCK/W33, 22238 CCK/W33
	190	240	169	30.5	M 190x3	12	**H 2338**	KM 38	MB 38	HMV 38 E	23238 CCK/W33, 22338 CCK/W33
180	200	240	98	31.5	M 200x3	7.9	**H 3940**	KML 40	MBL 40	HMV 40 E	23940 CCK/W33
	200	240	120	31.5	M 200x3	8.9	**H 3040**	KML 40	MBL 40	HMV 40 E	23040 CCK/W33, C 3040 K
	200	250	150	31.5	M 200x3	12	**H 3140**	KM 40	MB 40	HMV 40 E	23140 CCK/W33, 22240 CCK/W33, C3140 K
	200	250	176	31.5	M 200x3	13.5	**H 2340**	KM 40	MB 40	HMV 40 E	23240 CCK/W33, 22340 CCK/W33

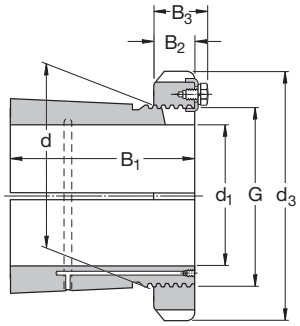

OH .. H, OH .. HTL

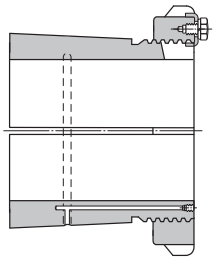

OH .. HE

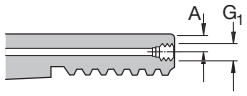

Dimensions									Mass	Designations Adptr. sleeve with lock nut and locking device	Lock nut	Locking device	Hydraulic nut	Bearing(s)
d_1	d	d_3	B_1	B_2	B_3	G	G_1	A						
mm									kg					
200	220	260	96	30	41	Tr 220x4	M 6	4.2	7.95	**OH 3944 H**	HM 3044	MS 3044	HMV 44 E	23944 CCK/W33
	220	260	126	30	41	Tr 220x4	M 6	4.2	9.9	**OH 3044 H**	HM 3044	MS 3044	HMV 44 E	C 3044 K
	220	280	161	35	–	Tr 220x4	M 6	4.2	15	**OH 3144 H**	HM 44 T	MB 44	HMV 44 E	23144 CCK/W33, 22244 CCK/W33, C 2244 K
	220	260	161	30	41	Tr 220x4	M 6	4.2	14.3	**OH 3144 HTL**	HM 3044	MS 3044	HMV 44 E	C 3144 K
	220	280	186	35	–	Tr 220x4	M 6	4.2	17	**OH 2344 H**	HM 44 T	MB 44	HMV 44 E	23244 CCK/W33, 22344 CCK/W33
220	240	290	101	34	46	Tr 240x4	M 6	4.2	11	**OH 3948 H**	HM 3048	MS 3052-48	HMV 48 E	23948 CCK/W33
	240	290	133	34	46	Tr 240x4	M 6	4.2	12	**OH 3048 H**	HM 3048	MS 3052-48	HMV 48 E	23048 CCK/W33, C 3048 K
	240	300	172	37	–	Tr 240x4	M 6	4.2	16.5	**OH 3148 H**	HM 48 T	MB 48	HMV 48 E	23148 CCK/W33, 22248 CCK/W33
	240	290	172	34	46	Tr 240x4	M 6	4.2	15.1	**OH 3148 HTL**	HM 3048	MS 3052-48	HMV 48 E	C 3148 K
	240	300	199	37	–	Tr 240x4	M 6	4.2	19	**OH 2348 H**	HM 48 T	MB 48	HMV 48 E	23248 CCK/W33, 22348 CCK/W33
240	260	310	116	34	46	Tr 260x4	M 6	4.2	11.7	**OH 3952 H**	HM 3052	MS 3052-48	HMV 52 E	23952 CCK/W33
	260	310	145	34	46	Tr 260x4	M 6	4.2	13.5	**OH 3052 H**	HM 3052	MS 3052-48	HMV 52 E	23052 CCK/W33,
	260	330	190	39	–	Tr 260x4	M 6	4.2	21	**OH 3152 H**	HM 52 T	MB 52	HMV 52 E	23152 CCK/W33, 22252 CACK/W33
	260	310	190	34	46	Tr 260x4	M 6	4.2	17.7	**OH 3152 HTL**	HM 3052	MS 3052-48	HMV 52 E	C 3152 K
	260	330	211	39	–	Tr 260x4	M 6	4.2	23	**OH 2352 H**	HM 52 T	MB 52	HMV 52 E	23252 CCK/W33, 22352 CACK/W33
260	280	330	121	38	50	Tr 280x4	M 6	4.2	15.3	**OH 3956 H**	HM 3056	MS 3056	HMV 56 E	23956 CCK/W33
	280	330	152	38	50	Tr 280x4	M 6	4.2	16	**OH 3056 H**	HM 3056	MS 3056	HMV 56 E	23056 CCK/W33, C 3056 K
	280	350	195	41	–	Tr 280x4	M 6	4.2	23	**OH 3156 H**	HM 56 T	MB 56	HMV 56 E	23156 CCK/W33, 22256 CACK/W33
	280	330	195	38	50	Tr 280x4	M 6	4.2	19.3	**OH 3156 HTL**	HM 3056	MS 3056	HMV 56 E	C 3156 K
	280	350	224	41	–	Tr 280x4	M 6	4.2	27	**OH 2356 H**	HM 56 T	MB 56	HMV 56 E	23256 CACK/W33, 22356 CCK/W33
280	300	360	140	42	54	Tr 300x4	M 6	4.2	20	**OH 3960 H**	HM 3060	MS 3060	HMV 60 E	23960 CCK/W33
	300	360	168	42	54	Tr 300x4	M 6	4.2	20.5	**OH 3060 H**	HM 3060	MS 3060	HMV 60 E	23060 CCK/W33, C 3060 K
	300	380	208	40	53	Tr 300x4	M 6	4.2	29	**OH 3160 H**	HM 3160	MS 3160	HMV 60 E	23160 CCK/W33, 22260 CACK/W33, C 3160 K
	300	380	240	40	53	Tr 300x4	M 6	4.2	32	**OH 3260 H**	HM 3160	MS 3160	HMV 60 E	23260 CACK/W33
300	320	380	140	42	55	Tr 320x5	M 6	4	21.5	**OH 3964 H**	HM 3064	MS 3068-64	HMV 64 E	23964 CACK/W33
	320	380	171	42	55	Tr 320x5	M 6	4	22	**OH 3064 H**	HM 3064	MS 3068-64	HMV 64 E	23064 CCK/W33, C 3064 KM
	320	400	226	42	56	Tr 320x5	M 6	4	32	**OH 3164 H**	HM 3164	MS 3164	HMV 64 E	23164 CCK/W33, 22264 CACK/W33, C 3164 KM
	320	400	258	42	56	Tr 320x5	M 6	4	35	**OH 3264 H**	HM 3164	MS 3164	HMV 64 E	23264 CACK/W33
320	340	400	144	45	58	Tr 340x5	M 6	4	24.5	**OH 3968 H**	HM 3068	MS 3068-64	HMV 68 E	23968 CCK/W33
	340	400	187	45	58	Tr 340x5	M 6	4	27	**OH 3068 H**	HM 3068	MS 3068-64	HMV 68 E	23068 CCK/W33, C3068 KM
	340	440	254	55	72	Tr 340x5	M 6	4	50	**OH 3168 H**	HM 3168	MS 3172-68	HMV 68 E	23168 CCK/W33, C 3168 KM
	340	440	288	55	72	Tr 340x5	M 6	4	51.5	**OH 3268 H**	HM 3168	MS 3172-68	HMV 68 E	23268 CAK/W33
340	360	420	144	45	58	Tr 360x5	M 6	4	25.2	**OH 3972 H**	HM 3072	MS 3072	HMV 72 E	23972 CACK/W33
	360	420	144	45	58	Tr 360x5	M 6	4	25.2	**OH 3972 HE**	HME 3072	MS 3072	HMV 72 E	C 3972 KM
	360	420	188	45	58	Tr 360x5	M 6	4	29	**OH 3072 H**	HM 3072	MS 3072	HMV 72 E	23072 CCK/W33, C3072 KM
	360	460	259	58	75	Tr 360x5	M 6	4	56	**OH 3172 H**	HM 3172	MS 3172-68	HMV 72 E	23172 CACK/W33, C 3172 KM
	360	460	299	58	75	Tr 360x5	M 6	4	60.5	**OH 3272 H**	HM 3172	MS 3172-68	HMV 72 E	23272 CAK/W33
360	380	450	164	48	62	Tr 380x5	M 6	4	31.5	**OH 3976 H**	HM 3076	MS 3080-76	HMV 76 E	23976 CCK/W33, C3976 KMB
	380	450	193	48	62	Tr 380x5	M 6	4	35.5	**OH 3076 H**	HM 3076	MS 3080-76	HMV 76 E	23076 CCK/W33, C 3076 KM
	380	490	264	60	77	Tr 380x5	M 6	4	61.5	**OH 3176 H**	HM 3176	MS 3176	HMV 76 E	23176 CAK/W33
	380	490	310	60	77	Tr 380x5	M 6	4	69.5	**OH 3276 H**	HM 3176	MS 3176	HMV 76 E	23276 CAK/W33
380	400	470	168	52	66	Tr 400x5	M 6	4	35	**OH 3980 H**	HM 3080	MS 3080-76	HMV 80 E	23980 CACK/W33
	400	470	210	52	66	Tr 400x5	M 6	4	40	**OH 3080 H**	HM 3080	MS 3080-76	HMV 80 E	23080 CACK/W33, C 3080 KM
	400	520	272	62	82	Tr 400x5	M 6	4	73	**OH 3180 H**	HM 3180	MS 3184-80	HMV 80 E	23180 CAK/W33
	400	520	328	62	82	Tr 400x5	M 6	4	87	**OH 3280 H**	HM 3180	MS 3184-80	HMV 80 E	23820 CAK/W33
400	420	490	168	52	66	Tr 420x5	M 6	4	36	**OH 3984 H**	HM 3084	MS 3084	HMV 84 E	23984 CACK/W33
	420	490	168	52	66	Tr 420x5	M 6	4	36	**OH 3984 HE**	HME 3084	MS 3084	HMV 84 E	C 3984 KM
	420	490	212	52	66	Tr 420x5	M 6	4	47	**OH 3084 H**	HM 3084	MS 3084	HMV 84 E	23084 CAK/W33, C 3084 KM
	420	540	304	70	90	Tr 420x5	M 6	4	80	**OH 3184 H**	HM 3184	MS 3184-80	HMV 84 E	23184 CK/W33, C 3184 KM
	420	540	352	70	90	Tr 420x5	M 6	4	96	**OH 3284 H**	HM 3184	MS 3184-80	HMV 84 E	23284 CAK/W33

Metric Sleeves
d_1 410 - 710 mm

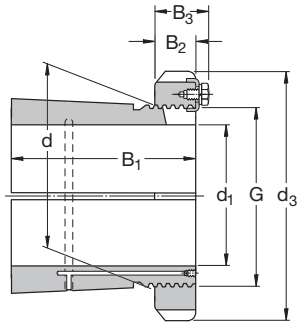

OH .. H, OH .. HTL

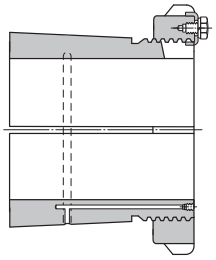

OH .. HE

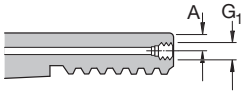

Dimensions									Mass	Designations Adptr. sleeve with lock nut and locking device	Lock nut	Locking device	Hydraulic nut	Bearing(s)
d_1	d	d_3	B_1	B_2	B_3	G	G_1	A						
mm									kg					
410	440	520	189	60	77	Tr 440x5	M 8	6.5	58	**OH 3988 H**	HM 3088	MS 3092-88	HMV 88 E	23988 CACK/W33
	440	520	228	60	77	Tr 440x5	M 8	6.5	65	**OH 3088 H**	HM 3088	MS 3092-88	HMV 88 E	23088 CAK/W33
	440	560	307	70	90	Tr 440x5	M 8	6.5	95	**OH 3188 H**	HM 3188	MS 3192-88	HMV 88 E	23188 CAK/W33
	440	560	361	70	90	Tr 440x5	M 8	6.5	117	**OH 3288 H**	HM 3188	MS 3192-88	HMV 88 E	23288 CAK/W33
430	460	540	189	60	77	Tr 460x5	M 8	6.5	60	**OH 3992 H**	HM 3092	MS 3092-88	HMV 92 E	23992 CAK/W33
	460	540	234	60	77	Tr 460x5	M 8	6.5	71	**OH 3092 H**	HM 3092	MS 3092-88	HMV 92 E	23092 CAK/W33, C 3092 KM
	460	580	326	75	95	Tr 460x5	M 8	6.5	119	**OH 3192 H**	HM 3192	MS 3192-88	HMV 92 E	23192 CAK/W33, C 3192 KM
	460	580	382	75	95	Tr 460x5	M 8	6.5	134	**OH 3292 H**	HM 3192	MS 3192-88	HMV 92 E	23292 CAK/W33
450	480	560	200	60	77	Tr 480x5	M 8	6.5	66	**OH 3996 H**	HM 3096	MS 30/500-96	HMV 96 E	23996 CAK/W33, C 3996 KM
	480	560	200	60	77	Tr 480x5	M 8	6.5	66	**OH 3996 HE**	HME 3096	MS 30/500-96	HMV 96 E	C3996 KM
	480	560	237	60	77	Tr 480x5	M 8	6.5	75	**OH 3096 H**	HM 3096	MS 30/500-96	HMV 96 E	23096 CAK/W33, C 3096 KM
	480	620	335	75	95	Tr 480x5	M 8	6.5	135	**OH 3196 H**	HM 3196	MS 3196	HMV 96 E	23196 CAK/W33
	480	620	397	75	95	Tr 480x5	M 8	6.5	153	**OH 3296 H**	HM 3196	MS 3196	HMV 96 E	23296 CAK/W33
470	500	580	208	68	85	Tr 500x5	M 8	6.5	74.3	**OH 39/500 H**	HM 30/500	MS 30/500-96	HMV 100 E	239/500 CAK/W33
	500	580	208	68	85	Tr 500x5	M 8	6.5	74.3	**OH 39/500 HE**	HME 30/500	MS 30/500-96	HMV 100 E	C 39/500 KM
	500	580	247	68	85	Tr 500x5	M 8	6.5	82	**OH 30/500 H**	HM 30/500	MS 30/500-96	HMV 100 E	230/500 CAK/W33, C 30/500 KM
	500	630	356	80	100	Tr 500x5	M 8	6.5	145	**OH 31/500 H**	HM 31/500	MS 31/500	HMV 100 E	231/500 CAK/W33, C 31/500 KM
	500	630	428	80	100	Tr 500x5	M 8	6	170	**OH 32/500 H**	HM 31/500	MS 31/500	HMV 100 E	232/500 CAK/W33
500	530	630	216	68	90	Tr 530x6	M 8	6	87.9	**OH 39/530 H**	HM 30/530	MS 30/600-530	HMV 106 E	239/530 CAK/W33
	530	630	216	68	90	Tr 530x6	M 8	6	87.9	**OH 39/530 HE**	HME 30/530	MS 30/600-530	HMV 106 E	C 39/530 KM
	530	630	265	68	90	Tr 530x6	M 8	6	105	**OH 30/530 H**	HM 30/530	MS 30/600-530	HMV 106 E	230/530 CAK/W33, C 30/530 KM
	530	670	364	80	105	Tr 530x6	M 8	6	161	**OH 31/530 H**	HM 31/530	MS 31/530	HMV 106 E	231/530 CAK/W33, C 31/530 KM
	530	670	447	80	105	Tr 530x6	M 8	6	192	**OH 32/530 H**	HM 31/530	MS 31/530	HMV 106 E	232/530 CAK/W33
530	560	650	227	75	97	Tr 560x6	M 8	6	95	**OH 39/560 H**	HM 30/560	MS 30/560	HMV 112 E	239/560 CAK/W33
	560	650	227	75	97	Tr 560x6	M 8	6	95	**OH 39/560 HE**	HME 30/560	MS 30/560	HMV 112 E	C 39/560 KM
	560	650	282	75	97	Tr 560x6	M 8	6	112	**OH 30/560 H**	HM 30/560	MS 30/560	HMV 112 E	230/560 CAK/W33, C 30/560 KM
	560	710	377	85	110	Tr 560x6	M 8	6	185	**OH 31/560 H**	HM 31/560	MS 31/600–560	HMV 112 E	231/560 CAK/W33
	560	710	462	85	110	Tr 560x6	M 8	6	219	**OH 32/560 H**	HM 31/560	MS 31/600–560	HMV 112 E	232/560 CAK/W33
560	600	700	239	75	97	Tr 600x6	G 1/8	8	127	**OH 39/600 HE**	HME 30/600	MS 30/600-530	HMV120	C 39/600KM
	600	700	239	75	97	Tr 600x6	G 1/8	8	127	**OH 39/600 H**	HM 30/600	MS 30/600-530	HMV 120	239/600 CAK/W33
	600	700	289	75	97	Tr 600x6	G 1/8	8	147	**OH 30/600 H**	HM 30/600	MS 30/600-530	HMV 120	230/600 CAK/W33, C 30/600 KM
	600	750	399	85	110	Tr 600x6	G 1/8	8	234	**OH 31/600 H**	HM 31/600	MS 31/600-560	HMV 120	231/600 CAK/W33
	600	750	487	85	110	Tr 600x6	G 1/8	8	278	**OH 32/600 H**	HM 31/600	MS 31/600-560	HMV 120	232/600 CAK/W33
600	630	730	254	75	97	Tr 630x6	M 8	6	124	**OH 39/630 H**	HM 30/630	MS 30/630	HMV 126 E	239/630 CAK/W33
	630	730	254	75	97	Tr 630x6	M 8	6	124	**OH 39/630 HE**	HME 30/630	MS 30/630	HMV 126 E	C 39/630 KM
	630	730	301	75	97	Tr 630x6	M 8	6	138	**OH 30/630 H**	HM 30/630	MS 30/630	HMV 126 E	230/630 CAK/W33, C 30/630 KM
	630	800	424	95	120	Tr 630x6	M 8	6	254	**OH 31/630 H**	HM 31/630	MS 31/630	HMV 126 E	231/630 CAK/W33
630	670	780	264	80	102	Tr 670x6	G 1/8	8	162	**OH 39/670 H**	HM 30/670	MS 30/670	HMV 134 E	239/670 CAK/W33, C 39/670 KM
	670	780	324	80	102	Tr 670x6	G 1/8	8	190	**OH 30/670 H**	HM 30/670	MS 30/670	HMV 134 E	230/670 CAK/W33, C 30/670 KM
	670	850	456	106	131	Tr 670x6	G 1/8	8	340	**OH 31/670 H**	HM 31/670	MS 31/670	HMV 134 E	231/670 CAK/W33
	670	850	558	106	131	Tr 670x6	G 1/8	8	401	**OH 32/670 H**	HM 31/670	MS 31/670	HMV 134 E	232/670 CAK/W33
670	710	830	286	90	112	Tr 710x7	G 1/8	8	183	**OH 39/710 H**	HM 30/710	MS 30/710	HMV 142 E	239/710 CAK/W33
	710	830	286	90	112	Tr 710x7	G 1/8	8	183	**OH 39/710 HE**	HME 30/710	MS 30/710	HMV 142 E	C 39/710 KM
	710	830	342	90	112	Tr 710x7	G 1/8	8	228	**OH 30/710 H**	HM 30/710	MS 30/710	HMV 142 E	230/710 CAK/W33, C 30/710 KM
	710	900	467	106	135	Tr 710x7	G 1/8	8	392	**OH 31/710 H**	HM 31/710	MS 31/710	HMV 142 E	231/710 CAK/W33
	710	900	572	106	135	Tr 710x7	G 1/8	8	459	**OH 32/710 H**	HM 31/710	MS 31/710	HMV 142 E	232/710 CAK/W33
710	750	870	291	90	112	Tr 750x7	G 1/8	8	211	**OH 39/750 H**	HM 30/750	MS 30/800-750	HMV 150 E	239/750 CAK/W33
	750	870	291	90	112	Tr 750x7	G 1/8	8	211	**OH 39/750 HE**	HME 30/750	MS 30/800-750	HMV 150 E	C 39/750 KM
	750	870	356	90	112	Tr 750x7	G 1/8	8	246	**OH 30/750 H**	HM 30/750	MS 30/800-750	HMV 150 E	230/750 CAK/W33
	750	950	493	112	141	Tr 750x7	G 1/8	8	451	**OH 31/750 H**	HM 31/750	MS 31/800-750	HMV 150 E	231/750 CAK/W33
	750	950	603	112	141	Tr 750x7	G 1/8	8	526	**OH 32/750 H**	HM 31/750	MS 31/800-750	HMV 150 E	232/750 CAK/W33

Metric Sleeves
d_1 750 - 1 000 mm

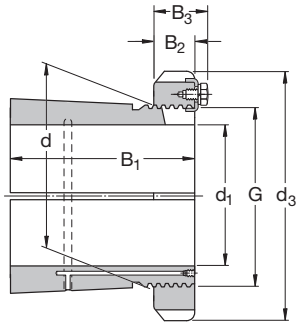

OH .. H, OH .. HTL

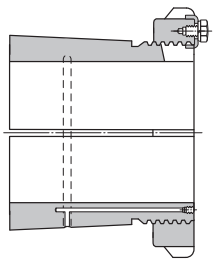

OH .. HE

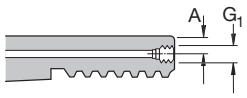

Dimensions									Mass	Designations Adptr. sleeve with lock nut and locking device	Lock nut	Locking device	Hydraulic nut	Bearing(s)
d_1	d	d_3	B_1	B_2	B_3	G	G_1	A						
mm									kg					
750	800	920	303	90	112	Tr 800x7	G 1/8	10	259	**OH 39/800 H**	HM 30/800	MS 30/800-750	HMV 160 E	239/800 CAK/W33
	800	920	303	90	112	Tr 800x7	G 1/8	10	259	**OH 39/800 HE**	HME 30/800	MS 30/800-750	HMV 160 E	C 39/800 KM
	800	920	366	90	112	Tr 800x7	G 1/8	10	302	**OH 30/800 H**	HM 30/800	MS 30/800-750	HMV 160 E	230/800 CAK/W33
	800	1 000	505	112	141	Tr 800x7	G 1/8	10	535	**OH 31/800 H**	HM 31/800	MS 31/800-750	HMV 160 E	231/800 CAK/W33
800	850	980	308	90	115	Tr 850x7	G 1/8	10	288	**OH 39/850 H**	HM 30/850	MS 30/900-850	HMV 170 E	239/850 CAK/W33
	850	980	308	90	115	Tr 850x7	G 1/8	10	288	**OH 39/850 HE**	HME 30/850	MS 30/900-850	HMV 170 E	C 39/850 KM
	850	980	380	90	115	Tr 850x7	G 1/8	10	341	**OH 30/850 H**	HM 30/850	MS 30/900-850	HMV 170 E	230/850 CAK/W33
	850	1 060	536	118	147	Tr 850x7	G 1/8	10	616	**OH 31/850 H**	HM 31/850	MS 31/850	HMV 170 E	231/850 CAK/W33
850	900	1 030	326	100	125	Tr 900x7	G 1/8	10	330	**OH 39/900 H**	HM 30/900	MS 30/900-850	HMV 180 E	239/900 CAK/W33
	900	1 030	326	100	125	Tr 900x7	G 1/8	10	330	**OH 39/900 HE**	HME 30/900	MS 30/900-850	HMV 180 E	C 39/900 KMB
	900	1 030	400	100	125	Tr 900x7	G 1/8	10	387	**OH 30/900 H**	HM 30/900	MS 30/900-850	HMV 180 E	230/900 CAK/W33
	900	1 120	557	125	154	Tr 900x7	G 1/8	10	677	**OH 31/900 H**	HM 31/900	MS 31/900	HMV 180 E	231/900 CAK/W33
900	950	1 080	344	100	125	Tr 950x8	G 1/8	10	363	**OH 39/950 H**	HM 30/950	MS 30/950	HMV 190 E	239/950 CAK/W33
	950	1 080	420	100	125	Tr 950x8	G 1/8	10	424	**OH 30/950 H**	HM 30/950	MS 30/950	HMV 190 E	230/950 CAK/W33
	950	1 170	583	125	154	Tr 950x8	G 1/8	10	738	**OH 31/950 H**	HM 31/950	MS 31/950	HMV 190 E	231/950 CAK/W33
950	1 000	1 140	358	100	125	Tr 1000x8	G 1/8	10	407	**OH 39/1000 H**	HM 30/1000	MS 30/1000	HMV 200 E	239/1000 CAK/W33
	1 000	1 140	430	100	125	Tr 1000x8	G 1/8	10	470	**OH 30/1000 H**	HM 30/1000	MS 30/1000	HMV 200 E	230/1000 CAK/W33
	1 000	1 240	609	100	154	Tr 1000x8	G 1/8	10	842	**OH 31/1000 H**	HM 31/1000	MS 31/1000	HMV 200 E	231/1000 CAK/W33
1 000	1 060	1 200	372	100	125	Tr 1060x8	G 1/8	12	490	**OH 39/1060 H**	HM 30/1060	MS 30/1000	HMV 212 E	239/1060 CAK/W33
	1 060	1 200	447	100	125	Tr 1060x8	G 1/8	12	571	**OH 30/1060 H**	HM 30/1060	MS 30/1000	HMV 212 E	230/1060 CAK/W33
	1 060	1 300	622	125	154	Tr 1060x8	G 1/8	12	984	**OH 31/1060 H**	HM 31/1060	MS 31/1000	HMV 212 E	231/1060 CAK/W33

Inch Sleeves
d_1 3/4 - 1 7/16 in

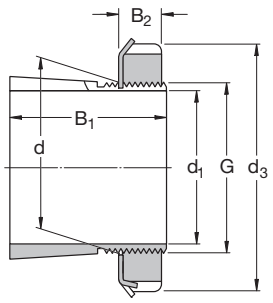

HA, HE, HS

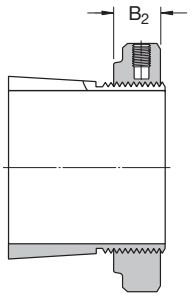

HA .. E, HE .. E, HS .. E

Dimensions						Mass	Designations Adptr. sleeve with lock nut and locking device	Lock nut	Locking device	Hydraulic nut	Bearing(s)
d_1	d	d_3	B_1	B_2	G						
in	mm					kg					
3/4	25	38	26	8	M 25x1.5	0.07	**HE 205**	KM 5	MB 5	-	1205 EK
	25	38	29	8	M 25x1.5	0.08	**HE 305**	KM 5	MB 5	-	2205 EK, 1305 EK
	25	38	29	10.5	M 25x1.5	0.088	**HE 305 E**	KMFE 5	–	-	C2205 K
	25	38	35	8	M 25x1.5	0.09	**HE 2305**	KM 5	MB 5	-	2305 K
7/8	30	45	27	8	M 30x1.5	0.11	**HS 206**	KM 6	MB 6	-	1206 EK
	30	45	31	8	M 30x1.5	0.12	**HS 306**	KM 6	MB 6	-	2206 EK, 1306 EK
15/16	30	45	27	8	M 30x1.5	0.1	**HA 206**	KM 6	MB 6	-	1206 EK
	30	45	31	8	M 30x1.5	0.12	**HA 306**	KM 6	MB 6	-	2206 EK
	30	45	31	10.5	M 30x1.5	0.13	**HA 306 E**	KMFE 6	–	-	C 2206 K
	30	45	38	8	M 30x1.5	0.13	**HA 2306**	KM 6	MB 6	-	2306 K
1	30	45	27	8	M 30x1.5	0.08	**HE 206**	KM 6	MB 6	-	1206 EK
	30	45	31	8	M 30x1.5	0.1	**HE 306**	KM 6	MB 6	-	2206 EK, 1306 EK
	30	45	31	10.5	M 30x1.5	0.11	**HE 306 E**	KMFE 6	–	-	C 2206 K
	30	45	38	8	M 30x1.5	0.11	**HE 2306**	KM 6	MB 6	-	2306 K
1 1/8	35	52	29	9	M 35x1.5	0.14	**HS 207**	KM 7	MB 7	-	1207 EK
	35	52	35	9	M 35x1.5	0.16	**HS 307**	KM 7	MB 7	-	2207 EK, 1307 EK, 22207 EK
	35	52	35	11.5	M 35x1.5	0.17	**HS 307 E**	KMFE 7	–	-	C 2207 K
1 3/16	35	52	29	9	M 35x1.5	0.12	**HA 207**	KM 7	MB 7	-	1207 EK
	35	52	35	9	M 35x1.5	0.14	**HA 307**	KM 7	MB 7	-	2207 EK, 1307 EK, 22207 EK
	35	52	35	11.5	M 35x1.5	0.15	**HA 307 E**	KMFE 7	–	-	C 2207 K
	35	52	43	9	M 35x1.5	0.16	**HA 2307**	KM 7	MB 7	-	2307 EK
1 1/4	40	58	31	10	M 40x1.5	0.19	**HE 208**	KM 8	MB 8	-	1208 EK
	40	58	36	10	M 40x1.5	0.22	**HE 308**	KM 8	MB 8	-	2208 EK, 1308 EK, 22208 EK, 21308 CCK
	40	58	36	13	M 40x1.5	0.19	**HE 308 E**	KMFE 8	–	-	C 2208 K
	40	58	46	10	M 40x1.5	0.28	**HE 2308**	KM 8	MB 8	-	2308 EK, 22308 EK
1 3/8	40	58	31	10	M 40x1.5	0.16	**HS 208**	KM 8	MB 8	-	1208 EK
	40	58	36	10	M 40x1.5	0.17	**HS 308**	KM 8	MB 8	-	2208 EK, 1308 EK, 22208 EK, 21308 CCK
1 7/16	45	65	33	11	M 45x1.5	0.26	**HA 209**	KM 9	MB 9	-	1209 EK
	45	65	39	11	M 45x1.5	0.29	**HA 309**	KM 9	MB 9	-	2209 EK, 1309 EK, 22209 EK, 21309 CCK
	45	65	39	13	M 45x1.5	0.31	**HA 309 E**	KMFE 9	–	-	C 2209 K
	45	65	50	11	M 45x1.5	0.35	**HA 2309**	KM 9	MB 9	-	2309 EK, 22309 EK

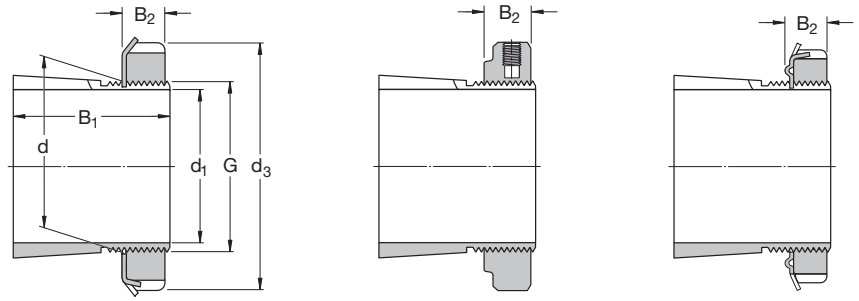

Dimensions						Mass	Designations Adptr. sleeve with lock nut and locking device	Lock nut	Locking device	Hydraulic nut	Bearing(s)
d_1	d	d_3	B_1	B_2	G						
in	mm					kg					
$1^{1/2}$	45	65	33	11	M 45x1.5	0.2	**HE 209**	KM 9	MB 9	–	1209 EK
	45	65	39	11	M 45x1.5	0.24	**HE 309**	KM 9	MB 9	–	2209 EK, 1309 EK, 22209 EK, 21309 CCK
	45	65	39	13	M 45x1.5	0.26	**HE 309 E**	KMFE 9	–	–	C 2209 K
	45	65	50	11	M 45x1.5	0.31	**HE 2309**	KM 9	MB 9	–	2309 EK, 22309 EK
$1^{5/8}$	50	70	35	12	M 50x1.5	0.31	**HS 210**	KM 10	MB 10	HMV 10 E	1210 EK
	50	70	42	12	M 50x1.5	0.36	**HS 310**	KM 10	MB 10	HMV 10 E	2210 EK, 1310 EK, 22210 EK, 21310 CCK
	50	70	55	12	M 50x1.5	0.4	**HS 2310**	KM 10	MB 10	HMV 10 E	2310 EK, 22310 EK
$1^{11/16}$	50	70	35	12	M 50x1.5	0.28	**HA 210**	KM 10	MB 10	HMV 10 E	1210 EK
	50	70	42	12	M 50x1.5	0.32	**HA 310**	KM 10	MB 10	HMV 10 E	2210 EK, 1310 EK, 22210 EK, 21310 CCK
	50	70	42	14	M 50x1.5	0.32	**HA 310 E**	KMFE 10	–	HMV 10 E	C 2210 K
	50	70	55	12	M 50x1.5	0.4	**HA 2310**	KM 10	MB 10	HMV 10 E	2310 EK, 22310 EK
$1^{3/4}$	50	70	35	12	M 50x1.5	0.26	**HE 210**	KM 10	MB 10	HMV 10 E	1210 EK
	50	70	42	12	M 50x1.5	0.29	**HE 310**	KM 10	MB 10	HMV 10 E	2210 EK, 1310 EK, 22210 EK, 21310 CCK
	50	70	42	14	M 50x1.5	0.29	**HE 310 E**	KMFE 10	–	HMV 10 E	C 2210 K
	50	70	55	12	M 50x1.5	0.36	**HE 2310**	KM 10	MB 10	HMV 10 E	2310 EK, 22310 EK
$1^{7/8}$	55	75	37	12.5	M 55x2	0.33	**HS 211**	KM 11	MB 11	HMV 11 E	1211 EK
	55	75	45	12.5	M 55x2	0.38	**HS 311**	KM 11	MB 11	HMV 11 E	2211 EK, 1311 EK, 22211 EK, 21311 CCK
$1^{15/16}$	55	75	37	12.5	M 55x2	0.3	**HA 211**	KM 11	MB 11	HMV 11 E	1211 EK
	55	75	45	12.5	M 55x2	0.34	**HA 311**	KM 11	MB 11	HMV 11 E	2211 EK, 1311 EK, 22211 EK, 21311 CCK
	55	75	45	14	M 55x2	0.35	**HA 311 E**	KMFE 11	–	HMV 11 E	C 2211 K
	55	75	59	12.5	M 55x2	0.42	**HA 2311**	KM 11	MB 11	HMV 11 E	2311 K, 22311 EK
2	55	75	37	12.5	W 55x1/19	0.26	**HE 211 B**	HM 11	MB 11	–	1211 EK
	55	75	45	12.5	W 55x1/19	0.29	**HE 311 B**	HM 11	MB 11	–	2211 EK. 1311 EK. 22211 EK. 21311 CCK
	55	75	45	14	W 55x1/19	0.3	**HE 311 BE**	KMFE 11 B	–	–	C 2211 K
	55	75	59	12.5	W 55x1/19	0.36	**HE 2311 B**	HM 11	MB 11	–	2311 K, 22311 EK
$2^{1/8}$	60	80	38	13	M 60x2	0.35	**HS 212**	KM 12	MB 12	HMV 12 E	1212 EK
	60	80	47	13	M 60x2	0.4	**HS 312**	KM 12	MB 12	HMV 12 E	2212 EK, 1312 EK, 22212 EK, 21312 CCK
	60	80	47	14	M 60x2	0.41	**HS 312 E**	KMFE 12	–	HMV 12 E	C 2212 K
	60	80	62	13	M 60x2	0.49	**HS 2312**	KM 12	MB 12	HMV 12 E	2312 K, 22312 EK

Inch Sleeves
d_1 $2^{3/16}$ - $2^{11/16}$ in

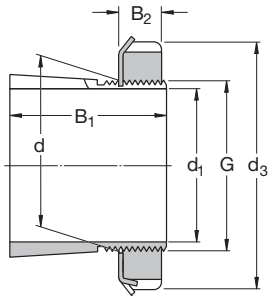

HA, HE, HS

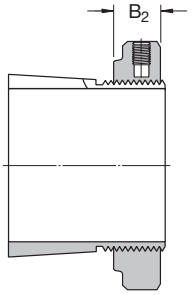

HA .. E, HE .. E

Dimensions						Mass	Designations Adptr. sleeve with lock nut and locking device	Lock nut	Locking device	Hydraulic nut	Bearing(s)
d_1	d	d_3	B_1	B_2	G						
in	mm					kg					
$2^{3/16}$	65	85	40	14	M 65x2	0.49	**HA 213**	KM 13	MB 13	HMV 13 E	1213 K
	65	85	50	14	M 65x2	0.58	**HA 313**	KM 13	MB 13	HMV 13 E	2213 EK, 1313 EK, 22213 EK, 21313 CCK
	65	85	50	15	M 65x2	0.59	**HA 313 E**	KMFE 13	–	HMV 13 E	C 2213 K
	65	85	65	14	M 65x2	0.75	**HA 2313**	KM 13	MB 13	HMV 13 E	2313 K, 22313 EK
$2^{1/4}$	65	85	40	14	M 65x2	0.44	**HE 213**	KM 13	MB 13	HMV 13 E	1213 EK
	65	85	50	14	M 65x2	0.52	**HE 313**	KM 13	MB 13	HMV 13 E	2213 EK, 1313 EK, 22213 EK, 21313 CCK
	65	85	50	15	M 65x2	0.53	**HE 313 E**	KMFE 13	–	HMV 13 E	C 2213 E
	65	85	65	14	M 65x2	0.65	**HE 2313**	KM 13	MB 13	HMV 13 E	2313 K, 22313 EK
$2^{3/8}$	65	85	40	14	M 65x2	0.44	**HS 213**	KM 13	MB 13	HMV 13 E	1213 EK
	65	85	50	14	M 65x2	0.71	**HS 313**	KM 13	MB 13	HMV 13 E	2213 EK, 1313 EK, 22213 EK, 21313 CCK
	65	85	65	14	M 65x2	0.8	**HS 2313**	KM 13	MB 13	HMV 13 E	2313 K, 22313 EK
$2^{7/16}$	75	98	43	15	M 75x2	0.75	**HA 215**	KM 15	MB 15	HMV 15 E	1215 K
	75	98	55	15	M 75x2	0.91	**HA 315**	KM 15	MB 15	HMV 15 E	2215 EK, 1315 EK, 22215 EK, 21315 CCK
	75	98	55	16	M 75x2	0.93	**HA 315 E**	KMFE 15	–	HMV 15 E	C 2215 K
	75	98	73	15	M 75x2	1.15	**HA 2315**	KM 15	MB 15	HMV 15 E	2315 K, 22315 EK, C 2315 K
$2^{1/2}$	75	98	43	15	M 75x2	0.7	**HE 215**	KM 15	MB 15	HMV 15 E	1215 K
	75	98	55	15	M 75x2	0.85	**HE 315**	KM 15	MB 15	HMV 15 E	2215 K, 1315 K, 22215 EK, 21315 CCK
	75	98	55	16	M 75x2	0.87	**HE 315 E**	KMFE 15	–	HMV 15 E	C 2215 K
	75	98	73	15	M 75x2	1.09	**HE 2315**	KM 15	MB 15	HMV 15 E	2315 K, 22315 EK, C 2315 K, C 2315 K
$2^{5/8}$	75	98	43	15	M 75x2	0.7	**HS 215**	KM 15	MB 15	HMV 15 E	1215 K
	75	98	55	15	M 75x2	0.71	**HS 315**	KM 15	MB 15	HMV 15 E	2215 EK, 1315 EK, 22215 EK, 21315 CCK
	75	98	73	15	M 75x2	0.9	**HS 2315**	KM 15	MB 15	HMV 15 E	2315 K, 22315 EK, C 2315 K
$2^{11/16}$	80	105	46	17	M 80x2	0.87	**HA 216**	KM 16	MB 16	HMV 16 E	1216 K
	80	105	59	17	M 80x2	1.05	**HA 316**	KM 16	MB 16	HMV 16 E	2216 EK, 1316 EK, 22216 EK, 21316 CCK
	80	105	59	18	M 80x2	1.06	**HA 316 E**	KMFE 16	–	HMV 16 E	C 2216 K
	80	105	78	17	M 80x2	1.3	**HA 2316**	KM 16	MB 16	HMV 16 E	2316 K, 22316 K, C 2316 K

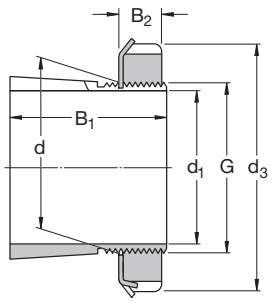

HA, HE, HS

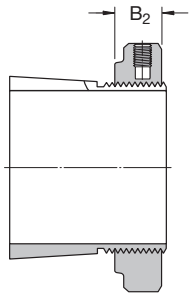

HA .. E, HE .. E

Dimensions						Mass	Designations Adptr. sleeve with lock nut and locking device	Lock nut	Locking device	Hydraulic nut	Bearing(s)
d_1	d	d_3	B_1	B_2	G						
in	mm					kg					
$2^{3/4}$	80	105	46	17	M 80x2	0.81	**HE 216**	KM 16	MB 16	HMV 16 E	1216 K
	80	105	59	17	M 80x2	0.97	**HE 316**	KM 16	MB 16	HMV 16 E	2216 EK, 1316 K, 22216 EK, 21316 CCK
	80	105	59	18	M 80x2	0.98	**HE 316 E**	KMFE 16	–	HMV 16 E	C 2216 K
	80	105	78	17	M 80x2	1.2	**HE 2316**	KM 16	MB 16	HMV 16 E	2316 K, 22316 EK, C 2316 K
$2^{15/16}$	85	110	50	18	M 85x2	0.94	**HA 217**	KM 17	MB 17	HMV 17 E	1217 K
	85	110	63	18	M 85x2	1.1	**HA 317**	KM 17	MB 17	HMV 17 E	2217 EK, 1317 K, 22217 EK, 21317 CCK
	85	110	63	19	M 85x2	1.19	**HA 317 E**	KMFE 17	–	HMV 17 E	C 2217 E
	85	110	82	18	M 85x2	1.4	**HA 2317**	KM 17	MB 17	HMV 17 E	2317 K, 22317 EK, C 2317 K
3	85	110	50	18	M 85x2	0.87	**HE 217**	KM 17	MB 17	HMV 17 E	1217 K
	85	110	63	18	M 85x2	1	**HE 317**	KM 17	MB 17	HMV 17 E	2217 K, 1317 K, 22217 EK, 21317 CCK
	85	110	63	19	M 85x2	0.99	**HE 317 E**	KMFE 17	–	HMV 17 E	C 2217 K
	85	110	82	18	M 85x2	1.3	**HE 2317**	KM 17	MB 17	HMV 17 E	2317 K, 22317 EK, C 2317 K
$3^{3/16}$	90	120	52	18	M 90x2	1.05	**HA 218**	KM 18	MB 18	HMV 18 E	1218 K
	90	120	65	18	M 90x2	1.25	**HA 318**	KM 18	MB 18	HMV 18 E	2218 K, 1318 K, 22218 EK, 21318 CCK
	90	120	65	19	M 90x2	1.26	**HA 318 E**	KMFE 18	–	HMV 18 E	C 2218 K
	90	120	86	18	M 90x2	1.5	**HA 2318**	KM 18	MB 18	HMV 18 E	2318 K, 23218-CCK/W33, 22318 EK, C 2318 K
$3^{1/4}$	90	120	52	18	M 90x2	0.97	**HE 218**	KM 18	MB 18	HMV 18 E	1218 K
	90	120	65	18	M 90x2	1.1	**HE 318**	KM 18	MB 18	HMV 18 E	2218 K, 1318 K, 22218 EK, 21318 CCK
	90	120	65	19	M 90x2	1.11	**HE 318 E**	KMFE 18	–	HMV 18 E	C 2218 K
	90	120	86	18	M 90x2	1.4	**HE 2318**	KM 18	MB 18	HMV 18 E	2318 K, 23218-CCK/W33, 22318 EK, C2318 K
	95	125	55	19	M 95x2	1.35	**HE 219**	KM 19	MB 19	HMV 19 E	1219 K
	95	125	68	19	M 95x2	1.6	**HE 319**	KM 19	MB 19	HMV 19 E	2219 K, 1319 K, 22219 EK, 21319 CCK
	95	125	68	20	M 95x2	1.61	**HE 319 E**	KMFE 19	–	HMV 19 E	C 2219 K
	95	125	90	19	M 95x2	2	**HE 2319**	KM 19	MB 19	HMV 19 E	2319 K, 22319 EK, C 2319 K

Inch Sleeves
d_1 $3^{7/16}$ - $4^{1/4}$ in

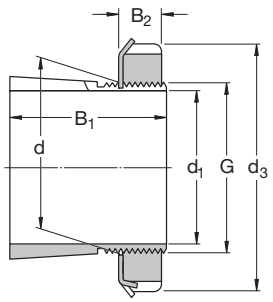

HA, HA .. L, HE, HE ..L

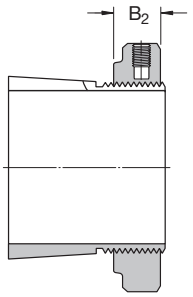

HA .. E, HE .. E

Dimensions						Mass	Designations Adptr. sleeve with lock nut and locking device	Lock nut	Locking device	Hydraulic nut	Bearing(s)
d_1	d	d_3	B_1	B_2	G						
in	mm					kg					
$3^{7/16}$	100	130	58	20	M 100x2	1.55	**HA 220**	KM 20	MB 20	HMV 20 E	1220 K
	100	130	71	20	M 100x2	1.8	**HA 320**	KM 20	MB 20	HMV 20 E	2220 K, 1320 K, 22220 EK, 21320 CCK
	100	130	71	21	M 100x2	1.75	**HA 320 E**	KMFE 20	–	HMV 20 E	C 2220 K
	100	130	97	20	M 100x2	2.35	**HA 2320**	KM 20	MB 20	HMV 20 E	2320 K, 23220-CCK/W33, 22320 EK, C2320 K
$3^{1/2}$	100	130	58	20	M 100x2	1.45	**HE 220**	KM 20	MB 20	HMV 20 E	1220 K
	100	130	71	20	M 100x2	1.75	**HE 320**	KM 20	MB 20	HMV 20 E	2220 K, 1320 K, 22220 EK, 21320 CCK
	100	130	71	21	M 100x2	1.7	**HE 320 E**	KMFE 20	–	HMV 20 E	C 2220 K
	100	130	76	20	M 100x2	1.8	**HE 3120**	KM 20	MB 20	HMV 20 E	23120 CCK/W33
	100	130	97	20	M 100x2	2.2	**HE 2320**	KM 20	MB 20	HMV 20 E	2320 K, 23220-CCK/W33, 22320 EK, C2320 K
$3^{15/16}$	**See metric sleeves for d_1 = 100mm**										
4	110	145	63	21	M 110x2	1.65	**HE 222**	KM 22	MB 22	HMV 22 E	1222 K
	110	145	77	21	M 110x2	1.9	**HE 322**	KM 22	MB 22	HMV 22 E	2222 K, 1322 K, 23022 CCK, 22222 EK, 21322 CCK
	110	145	77	21.5	M 110x2	1.85	**HE 322 E**	KMFE 22	–	HMV 22 E	C 2222 K
	110	145	81	21	M 110x2	2.25	**HE 3122**	KM 22	MB 22	HMV 22 E	23122 CCK/W33
	110	145	105	21	M 110x2	2.4	**HE 2322**	KM 22	MB 22	HMV 22 E	2322 K, 23222-CCK/W33, 22322 EK
$4^{3/16}$	120	145	72	22	M 120x2	2.25	**HA 3024**	KML 24	MBL 24	HMV 24 E	1224 K, 23024-CCK/W33
	120	155	72	26	M 120x2	2.32	**HA 3024 E**	KMFE 24	–	HMV 24 E	C 3024 K
	120	155	88	22	M 120x2	2.9	**HA 3124**	KM 24	MB 24	HMV 24 E	2224 K, 23124-CCK/W33
	120	145	88	22	M 120x2	2.6	**HA 3124 L**	KML 24	MBL 24	HMV 24 E	C 2224 K
	120	155	112	22	M 120x2	3.6	**HA 2324**	KM 24	MB 24	HMV 24 E	23224 CCK/W33, 22324 CCK/W33
	120	145	112	22	M 120x2	3.3	**HA 2324 L**	KML 24	MBL 24	HMV 24 E	C 3224 K
$4^{1/4}$	120	145	72	22	M 120x2	2	**HE 3024**	KML 24	MBL 24	HMV 24 E	1224 K, 23024-CCK/W33, C 3024 KV
	120	155	72	26	M 120x2	2.7	**HE 3024 E**	KMFE 24	–	HMV 24 E	C 3024 K
	120	155	88	22	M 120x2	2.8	**HE 3124**	KM 24	MB 24	HMV 24 E	23124 CCK/W33. 22224 EK
	120	155	112	22	M 120x2	3.35	**HE 2324**	KM 24	MB 24	HMV 24 E	23224 CCK/W33, 22324 CCK/W33
	120	145	112	22	M 120x2	3.05	**HE 2324 L**	KML 24	MBL 24	HMV 24 E	C 3224 K

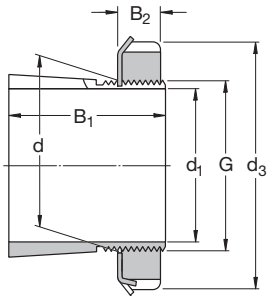

HA, HA .. L, HE, HE ..L

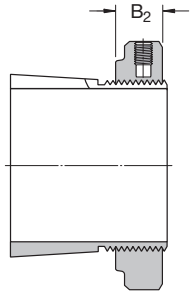

HA .. E, HE .. E

Dimensions						Mass	Designations				
							Adptr. sleeve with lock nut and locking device	Lock nut	Locking device	Hydraulic nut	Bearing(s)
d_1	d	d_3	B_1	B_2	G						
in	mm					kg					
$4^{7/16}$	130	155	80	23	M 130x2	3.05	**HA 3026**	KML 26	MBL 26	HMV 26 E	23026 CCK/W33
	130	165	92	23	M 130x2	3.75	**HA 3126**	KM 26	MB 26	HMV 26 E	23126 CCK/W33, 22226 EK
	130	155	92	23	M 130x2	3.55	**HA 3126 L**	KML 26	MBL 26	HMV 26 E	C 2226 K
	130	165	92	28	M 130x2	3.77	**HA 3126 E**	KMFE 26	–	HMV 26 E	C 2226 K
	130	165	121	23	M 130x2	4.74	**HA 2326**	KM 26	MB 26	HMV 26 E	23226 CCK/W33, 22326 CCK/W33, C 2326 K
$4^{1/2}$	130	155	80	23	M 130x2	2.9	**HE 3026**	KML 26	MBL 26	HMV 26 E	23026 CCK/W33, C 3026 K
	130	165	92	23	M 130x2	3.6	**HE 3126**	KM 26	MB 26	HMV 26 E	23126 CCK/W33, 22226 EK
	130	155	92	23	M 130x2	3.4	**HE 3126 L**	KML 26	MBL 26	HMV 26 E	C 2226 K
	130	165	121	23	M 130x2	4.55	**HE 2326**	KM 26	MB 26	HMV 26 E	23226 CCK/W33, 22326 CCK/W33, C2326 K
$4^{15/16}$	140	165	82	24	M 140x2	3	**HA 3028**	KML 28	MBL 28	HMV 28 E	23028 CCK/W33
	140	180	97	24	M 140x2	4.1	**HA 3128**	KM 28	MB 28	HMV 28 E	23128 CCK/W33, 22228 CCK/W33
	140	165	97	24	M 140x2	4.6	**HA 3128 L**	KML 28	MBL 28	HMV 28 E	C 2228 K
	140	180	131	24	M 140x2	5.3	**HA 2328**	KM 28	MB 28	HMV 28 E	23228 CCK/W33, 22328 CCK/W33
5	140	165	82	24	M 140x2	2.8	**HE 3028**	KML 28	MBL 28	HMV 28 E	23028 CCK/W33
	140	180	97	24	M 140x2	3.8	**HE 3128**	KM 28	MB 28	HMV 28 E	23128 CCK/W33, 22228 CCK/W33
	140	165	97	24	M 140x2	3.3	**HE 3128 L**	KML 28	MBL 28	HMV 28 E	C 2228 K
	140	180	131	24	M 140x2	5	**HE 2328**	KM 28	MB 28	HMV 28 E	23228 CCK/W33, 22328 CCK/W33
$5^{3/16}$	150	180	87	26	M 150x2	4.2	**HA 3030**	KML 30	MBL 30	HMV 30 E	23030 CCK/W33
	150	195	111	26	M 150x2	5.8	**HA 3130**	KM 30	MB 30	HMV 30 E	23130 CCK/W33, 22230 CCK/W33
	150	180	111	26	M 150x2	5.3	**HA 3130 L**	KML 30	MBL 30	HMV 30 E	C 2230 K
	150	195	139	26	M 150x2	7.1	**HA 2330**	KM 30	MB 30	HMV 30 E	23230 CCK/W33, 22330 CCK/W33
$5^{1/4}$	150	180	87	26	M 150x2	4	**HE 3030**	KML 30	MBL 30	HMV 30 E	23030 CCK/W33
	150	195	111	26	M 150x2	5.5	**HE 3130**	KM 30	MB 30	HMV 30 E	23130 CCK/W33, 22230 CCK/W33
	150	180	111	26	M 150x2	5	**HE 3130 L**	KML 30	MBL 30	HMV 30 E	C 2230 K
	150	195	139	26	M 150x2	6.8	**HE 2330**	KM 30	MB 30	HMV 30 E	23230 CCK/W33, 22330 CCK/W33

Inch Sleeves
d_1 $5^{7/16}$ - $6^{1/2}$ in

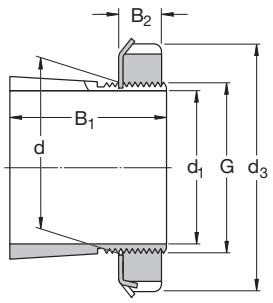

HA, HA .. L, HE, HE ..L

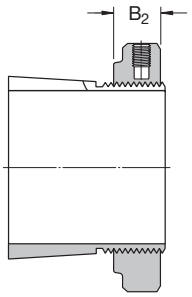

HA .. E, HE .. E

Dimensions						Mass	Designations Adptr. sleeve with lock nut and locking device	Lock nut	Locking device	Hydraulic nut	Bearing(s)
d_1	d	d_3	B_1	B_2	G						
in	mm					kg					
$5^{7/16}$	160	190	93	27.5	M 160x3	5.4	**HA 3032**	KML 32	MBL 32	HMV 32 E	23032 CCK/W33
	160	210	119	27.5	M 160x3	7.55	**HA 3132**	KM 32	MB 32	HMV 32 E	23132 CCK/W33, 22232 CCK/W33
	160	210	147	27.5	M 160x3	9.4	**HA 2332**	KM 32	MB 32	HMV 32 E	23232 CCK/W33, 22332 CCK/W33
	160	190	147	27.5	M 160x3	8.55	**HA 2332 L**	KML 32	MBL 32	HMV 32 E	C 3232 K
$5^{1/2}$	160	190	93	27.5	M 160x3	5.1	**HE 3032**	KML 32	MBL 32	HMV 32 E	23032 CCK/W33
	160	210	119	27.5	M 160x3	7.3	**HE 3132**	KM 32	MB 32	HMV 32 E	23132 CCK/W33, 22232 CCK/W33
	160	190	119	27.5	M 160x3	6.45	**HE 3132 L**	KML 32	MBL 32	HMV 32 E	C 3132 K
	160	210	147	27.5	M 160x3	8.8	**HE 2332**	KM 32	MB 32	HMV 32 E	23232 CCK/W33, 22332 CCK/W33
	160	190	147	27.5	M 160x3	7.95	**HE 2332 L**	KML 32	MBL 32	HMV 32 E	C 3232 K
$5^{15/16}$	170	200	101	28.5	M 170x3	5.7	**HA 3034**	KML 34	MBL 34	HMV 34 E	23034 CCK/W33, C 3034 K
	170	220	122	28.5	M 170x3	7.8	**HA 3134**	KM 34	MB 34	HMV 34 E	23134 CCK/W33, 22234 CCK/W33
	170	200	122	28.5	M 170x3	6.8	**HA 3134 L**	KML 34	MBL 34	HMV 34 E	C 2234 K
	170	220	154	28.5	M 170x3	9.6	**HA 2334**	KM 34	MB 34	HMV 34 E	23234 CCK/W33, 22334 CCK/W33
6	170	200	101	28.5	M 170x3	5.4	**HE 3034**	KML 34	MBL 34	HMV 34 E	23034 CCK/W33, C 3034 K
	170	220	122	28.5	M 170x3	7.55	**HE 3134**	KM 34	MB 34	HMV 34 E	23134 CCK/W33, 22234 CCK/W33
	170	200	122	28.5	M 170x3	6.6	**HE 3134 L**	KML 34	MBL 34	HMV 34 E	C 2234 K
	170	220	154	28.5	M 170x3	9.2	**HE 2334**	KM 34	MB 34	HMV 34 E	23234 CCK/W33, 22334 CCK/W33
$6^{7/16}$	180	210	109	29.5	M 180x3	6	**HA 3036**	KML 36	MBL 36	HMV 36 E	23036 CCK/W33, C 3036 K
	180	230	131	29.5	M 180x3	8.15	**HA 3136**	KM 36	MB 36	HMV 36 E	23136 CCK/W33, 22236 CCK/W33
	180	210	131	29.5	M 180x3	7.2	**HA 3136 L**	KML 36	MBL 36	HMV 36 E	C 3136 K
	180	230	161	29.5	M 180x3	9.9	**HA 2336**	KM 36	MB 36	HMV 36 E	23236 CCK/W33, 22336 CCK/W33, C 3236 K
$6^{1/2}$	180	210	109	29.5	M 180x3	5.55	**HE 3036**	KML 36	MBL 36	HMV 36 E	23036 CCK/W33, C 3036 K
	180	230	131	29.5	M 180x3	7.8	**HE 3136**	KM 36	MB 36	HMV 36 E	23136 CCK/W33, 22236 CCK/W33
	180	210	131	29.5	M 180x3	6.85	**HE 3136 L**	KML 36	MBL 36	HMV 36 E	C 3136 K
	180	230	161	29.5	M 180x3	9.35	**HE 2336**	KM 36	MB 36	HMV 36 E	23236 CCK/W33, 22336 CCK/W33, C 3236 K

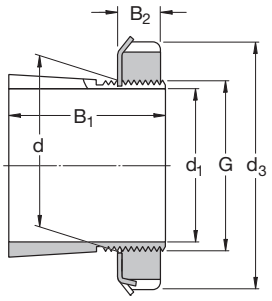

HA, HA .. L, HE, HE ..L

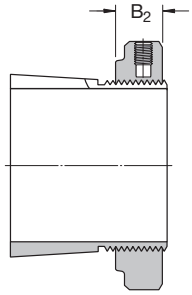

HA .. E, HE .. E

Dimensions						Mass	Designations				Bearing(s)
							Adptr. sleeve with lock nut and locking device	Lock nut	Locking device	Hydraulic nut	
d_1	d	d_3	B_1	B_2	G						
in	mm					kg					
$6^{3/4}$	190	220	112	30.5	M 190x3	7.2	**HE 3038**	KML 38	MBL 38	HMV 38 E	23038 CCK/W33, C3038 K
	190	240	141	30.5	M 190x3	10.2	**HE 3138**	KM 38	MB 38	HMV 38 E	23138 CCK/W33, 22238 CCK/W33
	190	240	169	30.5	M 190x3	11.7	**HE 2338**	KM 38	MB 38	HMV 38 E	23238 CCK/W33, 22338 CCK/W33
$6^{15/16}$	190	220	112	30.5	M 190x3	5.8	**HA 3038**	KML 38	MBL 38	HMV 38 E	23038 CCK/W33, C 3038 K
	190	240	141	30.5	M 190x3	8.5	**HA 3138**	KM 38	MB 38	HMV 38 E	23138 CCK/W33, 22238 CCK/W33
	190	240	169	30.5	M 190x3	10	**HA 2338**	KM 38	MB 38	HMV 38 E	23238 CCK/W33, 22338 CCK/W33
7	200	240	120	31.5	M 200x3	9.35	**HE 3040**	KML 40	MBL 40	HMV 40 E	23040 CCK/W33, C 3040 K
	200	250	150	31.5	M 200x3	12.3	**HE 3140**	KM 40	MB 40	HMV 40 E	23140 CCK/W33, 22240 CCK/W33, C 3140 K
	200	250	176	31.5	M 200x3	14.2	**HE 2340**	KM 40	MB 40	HMV 40 E	23240 CCK/W33, 22340 CCK/W33
$7^{3/16}$	200	240	120	31.5	M 200x3	8.25	**HA 3040**	KML 40	MBL 40	HMV 40 E	23040 CCK/W33, C 3040 K
	200	250	150	31.5	M 200x3	11.2	**HA 3140**	KM 40	MB 40	HMV 40 E	23140 CCK/W33, 22240 CCK/W33, C 3140 K

Wide Slot
Adapter Sleeves with Inch Dimensions
d_1 3/4 - 2 1/16 in

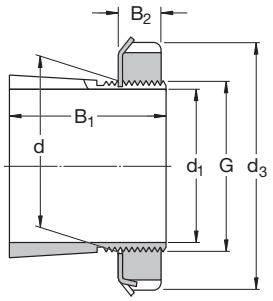

Dimensions							Mass	Designation	Lock nut	Locking device	Bearing(s)
d_1	d	d_3	B_1	B_2	G nom.	T.P.I.					
in	mm	in					kg				
3/4	25	1 9/16	1.269	0.456	0.969	32	0.10	**SNW 5 x 3/4**	N05	W05	1205 EK
15/16	30	1 3/4	1.353	0.456	1.173	18	0.10	**SNW 6 x 15/16**	N06	W06	1206 EK, 1306 EK
1	30	1 3/4	1.353	0.456	1.173	18	0.10	**SNW 6 x 1**	N06	W06	1206 EK, 1306 EK
1 1/8	35	2 1/16	1.459	0.487	1.376	18	0.16	**SNW 7 x 1 1/8**	N07	W 07	1207 EK, 1307 EK, 22207 EK
1 3/16	35	2 1/16	1.459	0.487	1.376	18	0.16	**SNW 7 x 1 3/16**	N07	W07	1207 EK, 1307 EK, 22207 EK
1 1/4	35	2 1/16	1.459	0.487	1.376	18	0.16	**SNW 7 x 1 1/4**	N07	W07	1207 EK, 1307 EK, 22207 EK
	40	2 1/4	1.504	0.495	1.563	18	0.19	**SNW 8 x 1 1/4**	N08	W08	1208 EK, 1308 EK, 22208 EK
1 3/8	40	2 1/4	1.504	0.495	1.563	18	0.19	**SNW 8 x 1 3/8**	N08	W08	1208 EK, 1308 EK, 22208 EK
	45	2 17/32	1.584	0.495	1.767	18	0.28	**SNW 9 x 1 3/8**	N09	W09	1209 EK, 1309 EK, 22209 EK, 21309 EK
1 5/16	40	2 1/4	1.504	0.495	1.563	18	0.19	**SNW 8 x 1 5/16**	N08	W08	1208 EK, 1308 EK, 22208 EK
	45	2 17/32	1.584	0.495	1.767	18	0.28	**SNW 9 x 1 5/16**	N09	W09	1209 EK, 1309 EK, 22209 EK, 21309 EK
1 7/16	45	2 17/32	1.584	0.495	1.767	18	0.28	**SNW 9 x 1 7/16**	N09	W09	1209 EK, 1309 EK, 22209 EK, 21309 EK
	45	2 17/32	2.133	0.495	1.767	18	0.32	**SNW 109 x 1 7/16**	N09	W09	2309 EK, 22309 EK
1 1/2	45	2 17/32	2.133	0.495	1.767	18	0.32	**SNW 109 x 1 1/2**	N09	W09	2309 EK, 22309 EK
1 5/8	50	2 11/16	1.765	0.558	1.967	18	0.33	**SNW 10 x 1 5/8**	N10	W10	1210 EK, 1310 EK, 22210 EK, 21310 CCK
1 11/16	50	2 11/16	1.765	0.558	1.967	18	0.33	**SNW 10 x 1 11/16**	N10	W10	1210 EK, 1310 EK, 22210 EK, 21310 CCK
	50	2 11/16	2.394	0.558	1.967	18	0.39	**SNW 110 x 1 11/16**	N10	W10	2310 EK, 22310 EK
1 3/4	50	2 11/16	1.765	0.558	1.967	18	0.33	**SNW 10 x 1 3/4**	N10	W10	1210 EK, 1310 EK, 22210 EK, 21310 CCK
	55	2 31/32	1.845	0.563	2.157	18	0.36	**SNW 11 x 1 3/4**	N11	W11	1211 EK, 1311 EK, 22211 EK, 21311 EK
1 13/16	55	2 31/32	1.845	0.563	2.157	18	0.36	**SNW 11 x 1 13/16**	N11	W11	1211 EK, 1311 EK, 22211 EK, 21311 EK
1 7/8	55	2 31/32	1.845	0.563	2.157	18	0.36	**SNW 11 x 1 7/8**	N11	W11	1211 EK, 1311 EK, 22211 EK, 21311 EK
1 15/16	55	2 31/32	1.845	0.563	2.157	18	0.36	**SNW 11 x 1 15/16**	N11	W11	1211 EK, 1311 EK, 22211 EK, 21311 EK
	55	2 31/32	2.516	0.563	2.157	18	0.43	**SNW 111 x 1 15/16**	N11	W11	2311 K, 22311 EK
2	55	2 31/32	1.845	0.563	2.157	18	0.36	**SNW 11 x 2**	N11	W11	1211 EK, 1311 EK, 22211 EK, 21311 EK
	55	2 31/32	2.516	0.563	2.157	18	0.43	**SNW 111 x 2**	N11	W11	2311 K, 22311 EK
	65	3 3/8	2.100	0.625	2.548	18	0.64	**SNW 13 x 2**	N13	W13	1213 EK, 1313 EK, 22213 EK
2 1/16	60	3 5/32	2.659	0.594	2.360	18	0.73	**SNW 112 x 2 1/16**	N12	W12	2312 K, 22312 EK

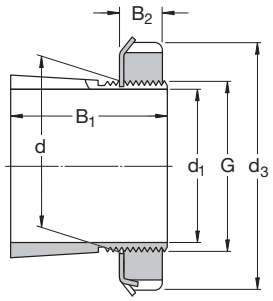

Dimensions							Mass	Designation	Lock nut	Locking device	Hydraulic nut	Bearing(s)
d_1	d	d_3	B_1	B_2	G nom.	T.P.I.						
in	mm	in					kg					
$2^{3/16}$	65	$3^{3/8}$	2.100	0.625	2.548	18	0.64	**SNW 13 x $2^{3/16}$**	N13	W13	-	1213 EK, 1313EK, 22213 EK,
	65	$3^{3/8}$	2.771	0.625	2.548	18	0.79	**SNW 113 x $2^{3/16}$**	N13	W13	-	2313 K, 22313 EK
$2^{1/4}$	65	$3^{3/8}$	2.100	0.625	2.548	18	0.64	**SNW 13 x $2^{1/4}$**	N13	W13	-	1213 EK,1313 EK,22213 EK
	65	$3^{3/8}$	2.771	0.625	2.548	18	0.79	**SNW 113 x $2^{1/4}$**	N13	W13	-	2313 K, 22313 EK
$2^{5/16}$	65	$3^{3/8}$	2.100	0.625	2.548	18	0.64	**SNW 13 x $2^{5/16}$**	N13	W13	-	1213 EK, 1313EK, 22213 EK,
$2^{3/8}$	75	$3^{7/8}$	2.296	0.665	2.933	12	1.00	**SNW 15 x $2^{3/8}$**	AN15	W15	-	1215 K, 1315 K, 22215 EK
$2^{7/16}$	75	$3^{7/8}$	2.296	0.665	2.933	12	1.00	**SNW 15 x $2^{7/16}$**	AN15	W15	-	1215 K, 1315 K, 22215 EK
	75	$3^{7/8}$	3.084	0.665	2.933	12	1.35	**SNW 115 x $2^{7/16}$**	AN15	W15	-	2315 K, 22315 EK
$2^{11/16}$	80	$4^{5/32}$	2.376	0.665	3.137	12	1.10	**SNW 16 x $2^{11/16}$**	AN16	W16	-	1216 K, 1316 K, 22216 EK
	80	$4^{5/32}$	3.204	0.665	3.137	12	1.45	**SNW 116 x $2^{11/16}$**	AN16	W16	-	2316 K, 22316 EK
$2^{3/4}$	80	$4^{5/32}$	2.376	0.665	3.137	12	1.10	**SNW 16 x $2^{3/4}$**	AN16	W16	-	1216 K, 1316 K, 22216 EK
$2^{15/16}$	85	$4^{13/32}$	2.486	0.697	3.340	12	1.30	**SNW 17 x $2^{15/16}$**	AN17	W17	-	1217 K, 1317 K, 22217 EK
	85	$4^{13/32}$	3.312	0.697	3.340	12	1.55	**SNW 117 x $2^{15/16}$**	AN17	W17	-	2317 K, 22317 EK
3	85	$4^{13/32}$	2.486	0.697	3.340	12	1.30	**SNW 17 x 3**	AN17	W17	-	1217 K, 1317 K, 22217 EK
	85	$4^{13/32}$	3.312	0.697	3.340	12	1.55	**SNW 117 x 3**	AN17	W17	-	2317 K, 22317 EK
$3^{3/16}$	90	$4^{21/32}$	2.646	0.782	3.527	12	1.40	**SNW 18 x $3^{3/16}$**	AN18	W18	HMVC 18	1218 K, 1318 K, 22218 EK
	90	$4^{21/32}$	3.553	0.782	3.527	12	1.80	**SNW 118 x $3^{3/16}$**	AN18	W18	HMVC 18	2318 K, 23218 CCK/W33, 22318 EK
$3^{1/4}$	90	$4^{21/32}$	2.646	0.782	3.527	12	1.40	**SNW 18 x $3^{1/4}$**	AN18	W18	HMVC 18	1218 K, 1318 K, 22218 EK
$3^{5/16}$	95	$4^{15/16}$	2.760	0.813	3.730	12	1.85	**SNW 19 x $3^{5/16}$**	AN19	W19	HMVC19	1219 K, 1319 K, 22219 EK
	95	$4^{15/16}$	3.702	0.813	3.730	12	2.20	**SNW 119 x $3^{5/16}$**	AN19	W19	HMVC19	23219 CCK/W33, 22319 EK
$3^{7/16}$	100	$5^{3/16}$	2.869	0.844	3.918	12	2.00	**SNW 20 x $3^{7/16}$**	AN20	W20	HMVC20	1220 K, 1320 K, 22220 EK
	100	$5^{3/16}$	3.971	0.844	3.918	12	2.85	**SNW 120 x $3^{7/16}$**	AN20	W20	HMVC20	23220 CCK/W33, 22320EK
$3^{1/2}$	100	$5^{3/16}$	2.869	0.844	3.918	12	2.00	**SNW 20 x $3^{1/2}$**	AN20	W20	HMVC20	1220 K, 1320 K, 22220 EK
	100	$5^{3/16}$	3.971	0.844	3.918	12	2.85	**SNW 120 x $3^{1/2}$**	AN20	W20	HMVC20	23220 CCK/W33, 22320EK
$3^{11/16}$	105	$5^{7/16}$	2.987	0.844	4.122	12	2.05	**SNW 21 x $3^{11/16}$**	AN21	W21		1321 K
	110	$5^{23/32}$	3.206	0.906	4.325	12	2.25	**SNW 22 x $3^{11/16}$**	AN22	W22	HMVC22	1222 K, 1322 K, 22222 EK
$3^{15/16}$	110	$5^{23/32}$	3.206	0.906	4.325	12	2.25	**SNW 22 x $3^{15/16}$**	AN22	W22	HMVC22	1222 K, 1322 K, 22222 EK
	110	$5^{23/32}$	4.348	0.906	4.325	12	2.95	**SNW 122 x $3^{15/16}$**	AN22	W22	HMVC22	23222 CCK/W33, 22322 EK

Wide Slot
Adapter Sleeves with Inch Dimensions
d_1 4 - $5^{3/4}$ in

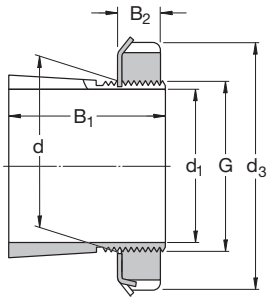

Dimensions							Mass	Designation	Lock nut	Locking device	Hydraulic nut	Bearing(s)
d_1	d	d_3	B_1	B_2	G nom.	T.P.I.						
in	mm	in					kg					
4	110	$5^{23/32}$	3.206	0.906	4.325	12	2.25	**SNW 22 x 4**	AN22	W22	HMVC 22	1222K, 1322K, 22222EK
$4^{3/16}$	120	$5^{11/16}$	2.947	0.938	4.716	12	2.80	**SNW 3024 x $4^{3/16}$**	N024	W024	HMVC 24	23024 CCK/W33
		$5^{11/16}$	3.466	0.938	4.716	12	2.65	**SNW 3124 x $4^{3/16}$**	N024	W024	HMVC 24	23124 CCK/W33
		$6^{1/8}$	3.466	0.938	4.716	12	3.00	**SNW 24 x $4^{3/16}$**	AN24	W24	HMVC 24	22224 EK
		$6^{1/8}$	4.648	0.938	4.716	12	3.55	**SNW 124 x $4^{3/16}$**	AN24	W24	HMVC 24	23224 CCK/W33, 22324 CCK/W33
$4^{1/4}$	120	$5^{11/16}$	3.466	0.938	4.716	12	2.65	**SNW 3124 x $4^{1/4}$**	N024	W024	HMVC 24	23124 CCK/W33
		$6^{1/8}$	3.466	0.938	4.716	12	3.00	**SNW 24 x $4^{1/4}$**	AN24	W24	HMVC 24	22224 EK
$4^{7/16}$	130	$6^{1/8}$	3.237	1.00	5.106	12	3.40	**SNW 3026 x $4^{7/16}$**	N026	W026	HMVC 26	23026 CCK/W33
		$6^{1/8}$	3.762	1.00	5.106	12	3.80	**SNW 3126 x $4^{7/16}$**	N026	W026	HMVC 26	23126 CCK/W33
		$6^{3/4}$	3.762	1.00	5.106	12	4.40	**SNW 26 x $4^{7/16}$**	AN26	W26	HMVC 26	22226 EK
		$6^{3/4}$	4.982	1.00	5.106	12	5.65	**SNW 126 x $4^{7/16}$**	AN26	W26	HMVC 26	23226 CCK/W33, 22326 CCK/W33
$4^{1/2}$	130	$6^{1/8}$	3.237	1.00	5.106	12	3.40	**SNW 3026 x $4^{1/2}$**	N026	W026	HMVC 26	23026 CCK/W33
		$6^{1/8}$	3.762	1.00	5.106	12	3.80	**SNW 3126 x $4^{1/2}$**	N026	W026	HMVC 26	23126CCK/W33
		$6^{3/4}$	3.762	1.00	5.106	12	4.40	**SNW 26 x $4^{1/2}$**	AN26	W26	HMVC 26	22226 EK
$4^{15/16}$	140	$6^{1/2}$	3.340	1.063	5.497	12	3.80	**SNW 3028 x $4^{15/16}$**	N028	W028	HMVC 28	23028 CCK/W33
		$6^{1/2}$	3.981	1.063	5.497	12	4.00	**SNW 3128 x $4^{15/16}$**	N028	W028	HMVC 28	23128 CCK/W33
		$7^{3/32}$	3.981	1.063	5.497	12	4.75	**SNW 28 x $4^{15/16}$**	AN28	W28	HMVC 28	22228 CCK/W33
		$7^{3/32}$	5.323	1.063	5.497	12	5.90	**SNW 128 x $4^{15/16}$**	AN28	W28	HMVC 28	23228 CCK/W33, 22328 CCK/W33
5	140	$6^{1/2}$	3.340	1.063	5.497	12	3.85	**SNW 3028 x 5**	N028	W028	HMVC 28	23028 CCK/W33
		$6^{1/2}$	3.981	1.063	5.497	12	4.00	**SNW 3128 x 5**	N028	W028	HMVC 28	23128 CCK/W33
		$7^{3/32}$	3.981	1.063	5.497	12	4.75	**SNW 28 x 5**	AN28	W28	HMVC 28	22228CCK/W33
$5^{3/16}$	150	$7^{1/8}$	3.492	1.094	5.888	12	4.45	**SNW 3030 x $5^{3/16}$**	N030	W030	HMVC 30	23030 CCK/W33
		$7^{1/8}$	4.241	1.094	5.888	12	6.20	**SNW 3130 x $5^{3/16}$**	N030	W030	HMVC 30	23130 CCK/W33
		$7^{11/16}$	4.241	1.125	5.888	12	7.25	**SNW 30 x $5^{3/16}$**	AN30	W30	HMVC 30	22230 CCK/W33
		$7^{11/16}$	5.621	1.125	5.888	12	8.15	**SNW 130 x $5^{3/16}$**	AN30	W30	HMVC 30	23230 CCK/W33 22330 CCK/W33
$5^{1/4}$	150	$7^{11/16}$	4.241	1.125	5.888	12	7.25	**SNW 30 x $5^{1/4}$**	AN30	W30	HMVC 30	22230 CCK/W33
$5^{7/16}$	160	$7^{1/2}$	3.711	1.156	6.284	8	5.45	**SNW 3032 x $5^{7/16}$**	N032	W032	HMVC 32	23032 CCK/W33
		$7^{1/2}$	4.578	1.156	6.284	8	6.10	**SNW 3132 x $5^{7/16}$**	N032	W032	HMVC 32	23132 CCK/W33
		$8^{1/16}$	4.578	1.187	6.284	8	7.05	**SNW 32 x $5^{7/16}$**	AN32	W32	HMVC 32	22232 CCK/W33
		$8^{1/16}$	5.920	1.187	6.284	8	8.15	**SNW 132 x $5^{7/16}$**	AN32	W32	HMVC 32	23232 CCK/W33, 22332CCK/W33
$5^{3/4}$	160	$8^{1/16}$	4.578	1.187	6.284	8	7.05	**SNW 32 x $5^{3/4}$**	AN32	W32	HMVC 32	22232 CCK/W33

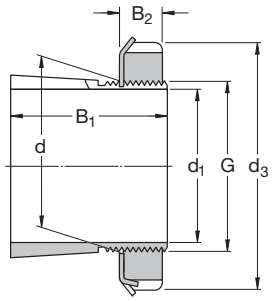

Dimensions							Mass	Designation	Lock nut	Locking device	Hydraulic nut	Bearing(s)
d_1	d	d_3	B_1	B_2	G nom.	T.P.I.						
in	mm	in					kg					
$5^{15/16}$	170	7 7/8	4.019	1.188	6.659	8	6.10	**SNW 3034 x $5^{15/16}$**	N034	W034	HMVC 34	23034 CCK/W33
		7 7/8	4.847	1.188	6.659	8	7.30	**SNW 3134 x $5^{15/16}$**	N034	W034	HMVC 34	23134CCK/W33
		8 21/32	4.847	1.219	6.659	8	8.85	**SNW 34 x $5^{15/16}$**	AN34	W34	HMVC 34	22234 CCK/W33
		8 21/32	6.188	1.219	6.659	8	9.55	**SNW 134 x $5^{15/16}$**	AN34	W34	HMVC 34	23234 CCK/W33, 22334CCK/W33
6	170	7 7/8	4.019	1.188	6.659	8	6.10	**SNW 3034 x 6**	N034	W034	HMVC 34	23034 CCK/W33
		7 7/8	4.847	1.188	6.659	8	7.30	**SNW 3134 x 6**	N034	W034	HMVC 34	23134 CCK/W33
		8 21/32	4.847	1.219	6.659	8	8.85	**SNW 34 x 6**	AN34	W34	HMVC 34	22234 CCK/W33
		8 21/32	6.188	1.219	6.659	8	9.55	**SNW 134 x 6**	AN34	W34	HMVC 34	23234 CCK/W33, 22334 CCK/W33
$6^{7/16}$	180	8 1/4	4.337	1.219	7.066	8	6.80	**SNW 3036 x $6^{7/16}$**	N036	W036	HMVC 36	23036 CCK/W33
		8 1/4	5.038	1.219	7.066	8	7.75	**SNW 3136 x $6^{7/16}$**	N036	W036	HMVC 36	23136 CCK/W33
		9 1/16	5.038	1.250	7.066	8	9.30	**SNW 36 x $6^{7/16}$**	AN36	W36	HMVC 36	22236 CCK/W33
		9 1/16	6.456	1.250	7.066	8	10.0	**SNW 136 x $6^{7/16}$**	AN36	W36	HMVC 36	23236 CCK/W33, 22336 CCK/W33
$6^{1/2}$	180	8 1/4	5.038	1.219	7.066	8	7.75	**SNW 3136 x $6^{1/2}$**	N036	W036	HMVC 36	23136 CCK/W33
		9 1/16	5.038	1.250	7.066	8	9.30	**SNW 36 x $6^{1/2}$**	AN36	W36	HMVC 36	22236 CCK/W33
$6^{15/16}$	190	8 11/16	4.412	1.250	7.472	8	7.50	**SNW 3038 x $6^{15/16}$**	N038	W038	HMVC 38	23038 CCK/W33
		8 11/16	5.261	1.250	7.472	8	8.95	**SNW 3138 x $6^{15/16}$**	N038	W038	HMVC 38	23138 CCK/W33
		9 15/32	5.261	1.281	7.472	8	10.5	**SNW 38 x $6^{15/16}$**	AN38	W38	HMVC 38	22238 CCK/W33
		9 15/32	6.758	1.281	7.472	8	12.5	**SNW 138 x $6^{15/16}$**	AN38	W38	HMVC 38	23238 CCK/W33, 22338 CCK/W33
7	190	8 11/16	4.412	1.250	7.472	8	7.50	**SNW 3038 x 7**	N038	W038	HMVC 38	23038 CCK/W33
		8 11/16	5.261	1.250	7.472	8	8.95	**SNW 3138 x 7**	N038	W038	HMVC 38	23138 CCK/W33
		9 15/32	5.261	1.281	7.472	8	10.5	**SNW 38 x 7**	AN38	W38	HMVC 38	22238 CCK/W33
		9 15/32	6.758	1.281	7.472	8	12.5	**SNW 138 x 7**	AN38	W38	HMVC 38	23238 CCK/W33, 22338 CCK/W33
$7^{3/16}$	200	9 7/16	4.750	1.313	7.847	8	8.85	**SNW 3040 x $7^{3/16}$**	N040	W040	HMVC 40	23040 CCK/W33
		9 7/16	5.484	1.313	7.847	8	12.9	**SNW 3140 x $7^{3/16}$**	N040	W040	HMVC 40	23140 CCK/W33
		9 27/32	5.484	1.344	7.847	8	14.0	**SNW 40 x $7^{3/16}$**	AN40	W40	HMVC 40	22240 CCK/W33
		9 27/32	7.095	1.344	7.847	8	16.0	**SNW 140 x $7^{3/16}$**	AN40	W40	HMVC 40	23240 CCK/W33, 22340 CCK/W33
$7^{15/16}$	220	10 1/4	5.130	1.375	8.628	8	11.0	**SNW 3044 x $7^{15/16}$**	N044	W044	HMVC 44	23044 CCK/W33
		10 1/4	5.901	1.375	8.628	8	12.8	**SNW 3144 x $7^{15/16}$**	N044	W044	HMVC 44	23144 CCK/W33
		11	5.901	1.406	8.628	8	14.5	**SNW 44 x $7^{15/16}$**	N44	W44	HMVC 44	22244 CCK/W33
		11	7.287	1.406	8.628	8	21.0	**SNW 144 x $7^{15/16}$**	N44	W44	HMVC 44	23244CCK/W33, 22344 CCK/W33
8	220	10 1/4	5.130	1.375	8.628	8	11.0	**SNW 3044 x 8**	N044	W044	HMVC 44	23044 CCK/W33
		10 1/4	5.901	1.375	8.628	8	12.8	**SNW 3144 x 8**	N044	W044	HMVC 44	23144 CCK/W33
		11	5.901	1.406	8.628	8	14.5	**SNW 44 x 8**	N44	W44	HMVC 44	22244 CCK/W33

Adapter Sleeves - large sizes
d_1 $8^{15/16}$ - $9^{15/16}$ in
220 - 240 mm

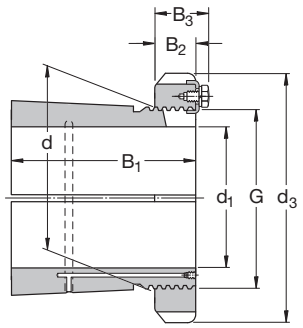

Dimensions						Mass	Designations Adapter Sleeve c/w Lock Nut and Locking Device	Lock Nut	Locking Device	Bearing(s)
d_1	d	d_3	B_1	B_2	B_3					
in/mm						kg/lb				
220	240	290	133	34	46	12.00	**H 3048**	HM 3048	MS 3052-48	23048 CCK
	9.4488	11.417	5.236	1.338	1.811	26.50				
	240	300	172	37	-	16.00	**H 3148**	HM 48 T	MB 48	23148 CCK
	9.4488	11.811	6.772	1.457	-	35.30				22248 CCK
	240	300	199	37	-	19.00	**H 2348**	HM 48 T	MB 48	23248 CCK
	9.4488	11.811	7.835	1.457	-	41.90				22348 CCK
8 15/16	240	290.65	137.97	34.39	43.13	14.50	**SNP 3048 x 8 15/16**[1)]	N 048	P 48	23048 CCK
	9.4488	11.443	5.432	1.354	1.698	32.00				
	240	290.65	168.60	34.39	43.13	17.00	**SNP 3148 x 8 15/16**[1)]	N 048	P 48	23148 CCK
	9.4488	11.443	6.638	1.354	1.698	37.50				
240	260	310	145	34	46	13.50	**H 3052**	HM 3052	MS 3052-48	23052 CCK
	10.2362	12.204	5.709	1.338	1.811	29.80				
	260	330	190	39	-	21.00	**H 3152**	HM 52 T	MB 52	23152 CCK
	10.2362	12.992	7.480	1.535	-	46.30				22252 CACK
	260	330	211	39	-	23.00	**H 2352**	HM 52 T	MB 52	23252 CCK
	10.2362	12.992	8.307	1.535	-	50.70				22352 CCK
9 7/16	260	309.70	152.88	35.97	44.70	18.60	**SNP 3052 x 9 7/16**[1)]	N 052	P 52 L/P	23052 CCK
	10.2362	12.193	6.019	1.416	1.760	41.00				
	260	309.70	192.86	35.97	44.70	20.00	**SNP 3152 x 9 7/16**[1)]	N 052	P 52 L/P	23152 CACK
	10.2362	12.193	7.593	1.416	1.760	44.00				
9 1/2	260	309.70	152.88	35.97	44.70	18,6	**SNP 3052 x 9 1/2**[1)]	N 052	P 52 L/P	23052 CCK
	10.236	12.193	6.019	1.416	1.760	41.0				
	260	309.70	192.86	35.97	44.70	20.0	**SNP 3152 x 9 1/2**[1)]	N 052	P 52 L/P	23152 CCK
	10.236	12.193	7.593	1.416	1.760	44.0				
9 15/16	280	330.33	157.25	38.35	47.09	20.6	**SNP 3056 x 9 15/16**[1)]	N 056	P 56	23056 CCK
	11.0236	13.005	6.191	1.510	1.854	45.5				

[1)] Wide Slot

Adapter Sleeves - large sizes
d_1 10 - $10^{15/16}$ in
260 - 280 mm

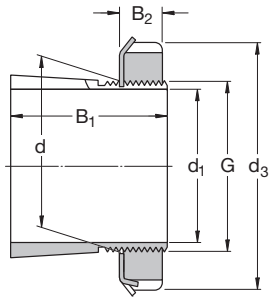

Dimensions						Mass	Designations Adapter Sleeve c/w Lock Nut and Locking Device	Lock Nut	Locking Device	Bearing(s)
d_1	d	d_3	B_1	B_2	B_3					
in/mm						kg/lb				
10	280	330.33	157.25	38.35	47.09	20.6	**SNP 3056 x 10**[1)]	N 056	P 56	23056 CCK
	11.0236	13.005	6.191	1.510	1.854	45.5				
	280	330.33	197.26	38.35	47.09	21.0	**SNP 3156 x 10**[1)]	N 056	P 56	23156 CCK
	11.0236	13.005	7.766	1.510	1.854	46.5				
260	280	330	152	38	50	16.0	**H 3056**	HM 3056	MS 3056	23056 CCK
	11.0236	12.992	5.984	1.496	1.968	35.3				
	280	350	195	41	-	23.0	**H 3156**	HM 56T	MB 56	23156 CCK
	11.0236	13.780	7.677	1.614	-	50.7				22256 CACK
	280	350	224	41	-	27.0	**H 2356**	HM 56T	MB 56	23256 CACK
	11.0236	13.780	8.819	1.614	-	59.5				22356 CCK
$10^{7/16}$	280	330.33	157.25	38.35	47.09	20.6	**SNP 3056 x 10 7/16**[1)]	N 056	P 56	23056 CCK
	11.0236	13.005	6.191	1.510	1.854	45.5				
	280	330.33	227.25	38.35	47.09	26.8	**SNP 3256 x 10 7/16**[1)]	N 056	P 56	23256 CACK
	11.0236	13.005	8.947	1.510	1.854	59.0				
$10^{1/2}$	280	330.33	157.25	38.35	47.09	20.6	**SNP 3056 x 10 1/2**[1)]	N 056	P 56	23056 CCK
	11.0236	13.005	6.191	1.510	1.854	45.5				
280	300	360	168	42	54	20.5	**H 3060**	HM 3060	MS 3060	23060 CCK
	11.8110	14.173	6.614	1.654	2.126	45.2				
	300	380	208	40	53	29.0	**H 3160**	HM 3160	MS 3160	23160 CCK
	11.8110	14.96	8.189	1.575	2.087	63.9				22260 CACK
	300	380	240	40	53	32.0	**H 3260**	HM 3160	MS 3160	23260 CACK
	11.8110	14.96	9.449	1.575	2.087	70.6				
$10^{15/16}$	300	360.50	170.87	40	49.48	27.0	**SNP 3060 x 10 15/16**[1)]	N 060	P 60	23060 CCK
	11.8110	14.193	6.727	1.575	1.948	59.0				
	300	360.50	244.86	40	49.48	31.0	**SNP 3260 x 10 15/16**[1)]	N 060	P 60	23260 CACK
	11.8110	14.193	9.640	1.575	1.948	68.5				
	11.0236	13.005	6.191	1.510	1.854	45.5				

[1)] Wide Slot

Adapter Sleeves - large sizes
d_1 11 - 13 7/16 in
300 - 340 mm

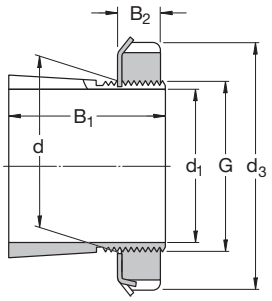

Dimensions						Mass	Designations Adapter Sleeve c/w Lock Nut and Locking Device	Lock Nut	Locking Device	Bearing(s)
d_1	d	d_3	B_1	B_2	B_3					
in/mm						kg/lb				
11	300	360.50	170.87	40	49.48	27.0	**SNP 3060 x 11**[1]	N 060	P 60	23060 CCK
	11.8110	14.193	6.727	1.575	1.948	59.0				
	300	360.50	244.86	40	49.48	31.0	**SNP 3260 x 11**[1]	N 060	P 60	23260 CACK
	11.8110	14.193	9.640	1.575	1.948	68.5				
11 1/2	320	381.13	176.43	42.32	51.84	29.5	**SNP 3064 x 11 1/2**[1]	N 064	P 64	23064 CCK
	12.5984	15.005	6.946	1.666	2.041	65.0				
300	320	380	171	42	55	22.0	**H 3064**	HM 3064	MS 3068-64	23064 CCK
	12.5984	14.960	6.732	1.653	2.165	48.5				
	320	400	226	42	56	32.0	**H 3164**	HM 3164	MS 3164	23164 CCK
	12.5984	15.748	8.898	1.653	2.205	70.6				22264 CACK
	320	400	258	42	56	35.0	**H 3264**	HM 3164	MS 3164	23264 CACK
	12.5984	15.748	10.157	1.653	2.205	77.2				
11 15/16	320	381.13	176.43	42.32	51.84	29.5	**SNP 3064 x 11 15/16**[1]	N 064	P 64	23064 CCK
	12.5984	15.005	6.946	1.666	2.041	65.0				
	320	381.13	263.42	42.32	51.84	44.5	**SNP 3264 x 11 15/16**[1]	N 064	P 64	23264 CACK
	12.5984	15.005	10.371	1.666	2.041	98.0				
12 7/16	340	400.18	192.09	45.49	55.02	35.3	**SNP 3068 x 12 7/16**[1]	N 068	P 68	23068 CCK
	13.3858	15.755	7.562	1.791	2.166	77.8				
320	340	400	187	45	58	27.0	**H 3068**	HM 3068	MS 3068-64	23068 CCK
	13.3858	15.748	7.362	1.772	2.283	59.5				
340	360	420	188	45	58	29.0	**H 3072**	HM 3072	MS 3072	23072 CCK
	14.1732	16.535	7.401	1.772	2.283	63.9				
13 7/16	360	419.23	192.51	45.49	55.02	39.0	**SNP 3072**	N 072	P 72 L/P	23072 CCK
	14.1732	16.505	7.579	1.791	2.166	86.0				

[1] Wide Slot

Adapter Sleeves - large sizes
d_1 $13^{15/16}$ in
360 - 450 mm

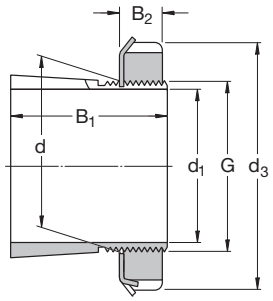

Dimensions						Mass	Designations Adapter Sleeve c/w Lock Nut and Locking Device	Lock Nut	Locking Device	Bearing(s)
d_1	d	d_3	B_1	B_2	B_3					
in/mm						kg/lb				
$13^{15/16}$	380	450.98	196.67	48.67	59.77	43.0	**SNP 3076**[1]	N 076	P 76	23076 CCK
	14.9606	17.755	7.743	1.916	2.353	94.5				
360	380	450	193	48	62	35.5	**H 3076**	HM 3076	MS 3080-76	23076 CCK
	14.9606	17.716	7.598	1.890	2.441	78.1				
380	400	470	210	52	66	40.0	**H 3080**	HM 3080	MS 3080-76	23080 CACK
	15.7480	18.504	8.268	2.047	2.598	88.2				
400	420	490	212	52	66	47.0	**H 3084**	HM 3084	MS 3084	23084 CAK
	16.5354	19.291	8.346	2.047	2.598	104				
450	480	560	237	60	77	75.0	**H 3096**	HM 3096	MS 30/500-96	23096 CAK
	18.8976	22.047	9.330	2.362	3.031	165				

[1] Wide Slot

Withdrawal Sleeves
d_1 35 - 90 mm

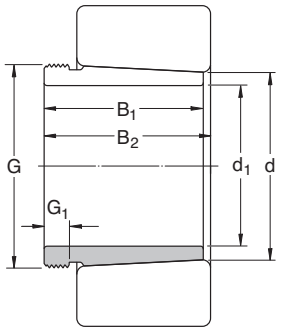

Dimensions						Mass	Designations Withdrawal sleeve only	Removal nut	Hydraulic nut	Lock nut	Locking device	Bearing(s)
d_1	d	B_1	B_2[1)]	G	G_1							
mm						kg	-					
35	40	29	32	M 45x1.5	6	0.09	**AH 308**	KM 9	–	KM 7	MB 7	2208 EK, 1308 EK, 22208 EK, 21308 CCK, C 2208 KTN9, C 2208 KV
	40	40	43	M 45x1.5	7	0.13	**AH 2308**	KM 9	–	KM 7	MB 7	2308 EK, 22308 EK
40	45	31	34	M 50x1.5	6	0.12	**AH 309**	KM 10	HMV 10 E	KM 8	MB 8	2209 EK, 1309 EK, 22209 EK, 21309 EK, C 2209 KTN9, C 2209 KV
	45	44	47	M 50x1.5	7	0.16	**AH 2309**	KM 10	HMV 10 E	KM 8	MB 8	2309 EK, 22309 EK
45	50	35	38	M 55x2	7	0.13	**AHX 310**	KM 11	HMV 11 E	KM 9	MB 9	2210 EK, 1310 EK, 22210 EK, 21310 CCK, C 2210 KTN9, C 2210 KV
	50	50	53	M 55x2	9	0.19	**AHX 2310**	KM 11	HMV 11 E	KM 9	MB 9	2310 K, 22310 K
50	55	37	40	M 60x2	7	0.16	**AHX 311**	KM 12	HMV 12 E	KM 10	MB 10	2211 EK, 1311 EK, 22211 EK, 21311 CCK, C 2211 KTN9, C 2211 KV
	55	54	57	M 60x2	10	0.26	**AHX 2311**	KM 12	HMV 12 E	KM 10	MB 10	2311 K, 22311 EK
55	60	40	43	M 65x2	8	0.19	**AHX 312**	KM 13	HMV 13 E	KM 11	MB 11	2212 EK, 1312 EK, 22212 EK, 21312 CCK, C2212 KTN9, C 2212 KV
	60	58	61	M 65x2	11	0.30	**AHX 2312**	KM 13	HMV 13 E	KM 11	MB 11	2312 K, 22312 EK
60	65	42	45	M 70x2	8	0.22	**AH 313 G**	KM 14	HMV 14 E	KM 12	MB 12	2213 EK, 1313 EK, 22213 EK, 21313 CCK, C 2213 KTN9, C 2212 KV
	65	61	64	M 70x2	12	0.36	**AH 2313 G**	KM 14	HMV 14 E	KM 12	MB 12	2313 K, 22313 K
65	70	43	47	M 75x2	8	0.24	**AH 314 G**	KM 15	HMV 15 E	KM 13	MB 13	22214 EK, 21314 CCK, C2214 KTN9, C 2214 KV
	70	64	68	M 75x2	12	0.42	**AHX 2314 G**	KM 15	HMV 15 E	KM 13	MB 13	22314 EK, C 2314 K
70	75	45	49	M 80x2	8	0.29	**AH 315 G**	KM 16	HMV 16 E	KM 14	MB 14	2215 K, 1315 K, 22215 EK, 21315 CCK, C 2215 K, C 2215 KV
	75	68	72	M 80x2	12	0.48	**AHX 2315 G**	KM 16	HMV 16 E	KM 14	MB 14	2315 K, 22315 K, C 2315 K
75	80	48	52	M 90x2	8	0.37	**AH 316**	KM 18	HMV 18 E	KM 15	MB 15	2216 EK, 1316 K, 22216 EK, 21316 CCK, C 2216 K, C 2216 KV
	80	71	75	M 90x2	12	0.57	**AHX 2316**	KM 18	HMV 18 E	KM 15	MB 15	2316 K, 22316 EK, C 2316 K
80	85	52	56	M 95x2	9	0.43	**AHX 317**	KM 19	HMV 19 E	KM 16	MB 16	2217 K, 1317 K, 22217 EK, 21317 CCK, C 2217 K, C 2217 KV
	85	74	78	M 95x2	13	0.65	**AHX 2317**	KM 19	HMV 19 E	KM 16	MB 16	2317 K, 22317 EKC 2317 K
85	90	53	57	M 100x2	9	0.46	**AHX 318**	KM 20	HMV 20 E	KM 17	MB 17	2218 K, 1318 K, 22218 EK, 21318 CCK, C 2218 K, C 2218 KV
	90	63	67	M 100x2	10	0.57	**AHX 3218**	KM 20	HMV 20 E	KM 17	MB 17	23218 CCK/W33
	90	79	83	M 100x2	14	0.76	**AHX 2318**	KM 20	HMV 20 E	KM 17	MB 17	2318 K, 22318 EK, C 2318 K
90	95	57	61	M 105x2	10	0.54	**AHX 319**	KM 21	HMV 21 E	KM 18	MB 18	2219 K, 1319 K, 22219 EK, 21319 CCK, C 2219 K
	95	85	89	M 105x2	16	0.9	**AHX 2319**	KM 21	HMV 21 E	KM 18	MB 18	2319 K, 22319 EK, C 2319 K

[1)] Width before the sleeve is driven into the bearing bore

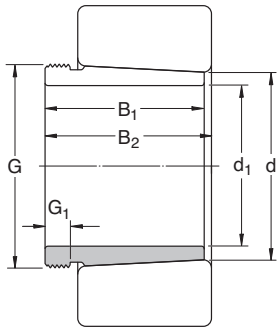

Dimensions							Mass	Designations Withdrawal sleeve only	Removal nut	Hydraulic nut	Lock nut	Locking device	Bearing(s)
d_1	d	B_1	B_2[1)]	G	G_1	G_2	A						
mm							kg	–					
95	100	59	63	M 110x2	10		0.58	**AHX 320**	KM 22	HMV 22 E	KM 19	MB 19	2220 K, 1320 K, 22220 EK, 21320 CCK, C 2220 K
	100	64	68	M 110x2	11		0.66	**AHX 3120**	KM 22	HMV 22 E	KM 19	MB 19	23120 CCK/W33, C 2320 K, C 3120 K, C 3120 KV
	100	73	77	M 110x2	11		0.76	**AHX 3220**	KM 22	HMV 22 E	KM 19	MB 19	23220 CCK/W33
	100	90	94	M 110x2	16		1.00	**AHX 2320**	KM 22	HMV 22 E	KM 19	MB 19	2320 K, 22320 EK, C 2320 K
105	110	63	67	M 120x2	12		0.77	**AHX 322**	KM 24	HMV 24 E	KM 21	MB 21	1322 K
	110	68	72	M 120x2	11		0.76	**AHX 3122**	KM 24	HMV 24 E	KM 21	MB 21	2222 K, 23122 CCK/W33, 22222 EK, C 3022 K, C 2222 K
	110	82	86	M 120x2	11		1.00	**AHX 3222 G**	KM 24	HMV 24 E	KM 21	MB 21	23222 CCK/W33
	110	98	102	M 120x2	16		1.30	**AHX 2322 G**	KM 24	HMV 24 E	KM 21	MB 21	2322 K, 22322 EK
	110	82	91	M 115x2	13		0.71	**AH 24122**	KM 23	HMV 23 E	KM 21	MB 21	24122 CCK30/W33, C 4122 K30V
115	120	60	64	M 130x2	13		0.73	**AHX 3024**	KM 26	HMV 26 E	KM 22	MB 22	23024 CCK/W33, C 3024 K, C 3024 KV
	120	75	79	M 130x2	12		0.94	**AHX 3124**	KM 26	HMV 26 E	KM 22	MB 22	23124 CCK/W33, 22224 EK, C 2224 K
	120	90	94	M 130x2	13		1.30	**AHX 3224 G**	KM 26	HMV 26 E	KM 22	MB 22	23224 CCK/W33, C 3224K
	120	105	109	M 130x2	17		1.55	**AHX 2324 G**	KM 26	HMV 26 E	KM 22	MB 22	22324 CCK/W33
	120	73	82	M 125x2	13		0.7	**AH 24024**	KM 25	HMV 25 E	KM 22	MB 22	24024 CCK30/W33, C 4024 K30V
	120	93	102	M 130x2	13		1.00	**AH 24124**	KM 26	HMV 26 E	KM 22	MB 22	24124 CCK30/W33, C 4124 K30V
125	130	67	71	M 140x2	14		0.91	**AHX 3026**	KM 28	HMV 28 E	KM 24	MB 24	23026 CCK/W33, C 3026 K
	130	78	82	M 140x2	12		1.10	**AHX 3126**	KM 28	HMV 28 E	KM 24	MB 24	23126 CCK/W33, 22226 EK, C 2226 K
	130	98	102	M 140x2	15		1.50	**AHX 3226 G**	KM 28	HMV 28 E	KM 24	MB 24	23226 CCK/W33
	130	115	119	M 140x2	19		1.85	**AHX 2326 G**	KM 28	HMV 28 E	KM 24	MB 24	22326 CCK/W33
	130	83	93	M 135x2	14		0.90	**AH 24026**	KM 27	HMV 27 E	KM 24	MB 24	24026 CCK30/W33, C 4026 K30, C 4026 K30V
	130	94	104	M 140x2	14		1.15	**AH 24126**	KM 28	HMV 28 E	KM 24	MB 24	24126 CCK30/W33, C4126 K30V/VE240
135	140	68	73	M 150x2	14		1.00	**AHX 3028**	KM 30	HMV 30 E	KM 26	MB 26	23028 CCK/W33, C 3028 K, C4026 K30V
	140	83	88	M 150x2	14		1.30	**AHX 3128**	KM 30	HMV 30 E	KM 26	MB 26	23128 CCK/W33, 22228 EK, C 2228 K
	140	104	109	M 150x2	15		1.75	**AHX 3228 G**	KM 30	HMV 30 E	KM 26	MB 26	23228 CCK/W33
	140	125	130	M 150x2	20		2.25	**AHX 2328 G**	KM 30	HMV 30 E	KM 26	MB 26	22328 CCK/W33
	140	83	93	M 145x2	14		0.95	**AH 24028**	KM 29	HMV 29 E	KM 26	MB 26	24028 CCK30/W33, C 4028 K30V
	140	99	109	M 150x2	14		1.30	**AH 24128**	KM 30	HMV 30 E	KM 26	MB 26	24128 CCK30/W33, C 4128 K30V
145	150	72	77	M 160x3	15		1.15	**AHX 3030**	KM 32	HMV 32 E	KM 28	MB 28	23030 CCK/W33, C 3030 KMB
	150	96	101	M 160x3	15		1.70	**AHX 3130 G**	KM 32	HMV 32 E	KM 28	MB 28	23130 CCK/W33, 22230 CCK/W33, C 3130 K, C 2230 K
	150	114	119	M 160x3	17		2.10	**AHX 3230 G**	KM 32	HMV 32 E	KM 28	MB 28	23230 CCK/W33
	150	135	140	M 160x3	24		2.75	**AHX 2330 G**	KM 32	HMV 32 E	KM 28	MB 28	22330 CCK/W33
	150	90	101	M 155x3	15		1.05	**AH 24030**	KM 31	HMV 31 E	KM 28	MB 28	24030 CCK30/W33, C 4030 K30V
	150	115	126	M 160x3	15		1.55	**AH 24130**	KM 32	HMV 32 E	KM 28	MB 28	24130 CCK30/W33, C 4130 K30V

[1)] Width before the sleeve is driven into the bearing bore

Withdrawal Sleeves
d_1 150 - 190 mm

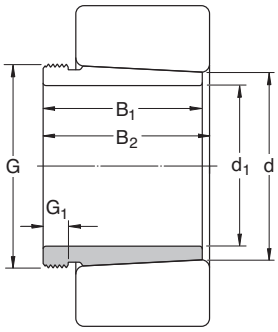

Dimensions						Mass	Designations Withdrawal sleeve only	Removal nut	Hydraulic nut	Lock nut	Locking device	Bearing(s)
d_1	d	B_1	B_2 [1]	G	G_1							
mm						kg	-					
150	160	77	82	M 170x3	16	2.00	**AH 3032**	KM 34	HMV 34 E	KM 30	MB 30	23032 CCK/W33, C 3032 K
	160	103	108	M 170x3	16	3.00	**AH 3132 G**	KM 34	HMV 34 E	KM 30	MB 30	23132 CCK/W33, 22232 CCK/W33, C 3132 K
	160	124	130	M 170x3	20	3.70	**AH 3232 G**	KM 34	HMV 34 E	KM 30	MB 30	23232 CCK/W33, C 3232 K
	160	140	146	M 170x3	24	4.35	**AH 2332 G**	KM 34	HMV 34 E	KM 30	MB 30	22332 CCK/W33
	160	95	106	M 170x3	15	2.30	**AH 24032**	KM 34	HMV 34 E	KM 30	MB 30	24032 CCK30/W33, C 4032 K30, C 4032 K30V
	160	124	135	M 170x3	15	3.00	**AH 24132**	KM 34	HMV 34 E	KM 30	MB 30	24132 CCK30/W33, C 4132 K30V
160	170	85	90	M 180x3	17	2.45	**AH 3034**	KM 36	HMV 36 E	KM 32	MB 32	23034 CCK/W33, C 3034 K
	170	104	109	M 180x3	16	3.20	**AH 3134 G**	KM 36	HMV 36 E	KM 32	MB 32	23134 CCK/W33, 22234 CCK/W33, C 3134 K, C 2234 K
	170	134	140	M 180x3	24	4.35	**AH 3234 G**	KM 36	HMV 36 E	KM 32	MB 32	23234 CCK/W33
	170	146	152	M 180x3	24	4.85	**AH 2334 G**	KM 36	HMV 36 E	KM 32	MB 32	22334 CCK/W33
	170	106	117	M 180x3	16	2.70	**AH 24034**	KM 36	HMV 36 E	KM 32	MB 32	24034 CCK30/W33, C 4034 K30V
	170	125	136	M 180x3	16	3.25	**AH 24134**	KM 36	HMV 36 E	KM 32	MB 32	24134 CCK30/W33, C 4134 K30V
170	180	92	98	M 190x3	17	2.80	**AH 3036**	KM 38	HMV 38 E	KM 34	MB 34	23036 CCK/W33, C 3036 K
	180	105	110	M 190x3	17	3.40	**AH 2236 G**	KM 38	HMV 38 E	KM 34	MB 34	22236 CCK/W33
	180	116	122	M 190x3	19	3.90	**AH 3136 G**	KM 38	HMV 38 E	KM 34	MB 34	23136 CCK/W33, C 3136 K
	180	140	146	M 190x3	24	4.85	**AH 3236 G**	KM 38	HMV 38 E	KM 34	MB 34	23236 CCK/W33, C 3236 K
	180	154	160	M 190x3	26	5.50	**AH 2336 G**	KM 38	HMV 38 E	KM 34	MB 34	22336 CCK/W33
	180	116	127	M 190x3	16	3.20	**AH 24036**	KM 38	HMV 38 E	KM 34	MB 34	24036 CCK30/W33, C 4036 K30V
	180	134	145	M 190x3	16	3.75	**AH 24136**	KM 38	HMV 38 E	KM 34	MB 34	24136 CCK30/W33, C 4136 K30V
180	190	96	102	M 200x3	18	3.30	**AH 3038 G**	KM 40	HMV 40 E	KM 36	MB 36	23038 CCK/W33, C 3038 K
	190	112	117	M 200x3	18	3.90	**AH 2238 G**	KM 40	HMV 40 E	KM 36	MB 36	22238 CCK/W33, C 2238 K
	190	125	131	M 200x3	20	4.50	**AH 3138 G**	KM 40	HMV 40 E	KM 36	MB 36	23138 CCK/W33, C 3138 K
	190	145	152	M 200x3	25	5.40	**AH 3238 G**	KM 40	HMV 40 E	KM 36	MB 36	23238 CCK/W33
	190	160	167	M 200x3	26	6.10	**AH 2338 G**	KM 40	HMV 40 E	KM 36	MB 36	22338 CCK/W33
	190	118	131	M 200x3	18	3.55	**AH 24038**	KM 40	HMV 40 E	KM 36	MB 36	24038 CCK30/W33, C 4038 K30V
	190	146	159	M 200x3	18	4.45	**AH 24138**	KM 40	HMV 40 E	KM 36	MB 36	24138 CCK30/W33, C 4138 K30V
190	200	102	108	Tr 210x4	19	3.70	**AH 3040 G**	HM 42 T	HMV 42 E	KM 38	MB 38	23040 CCK/W33, C 3040 K
	200	134	140	Tr 220x4	21	5.65	**AH 3140**	HM 3044	HMV 44 E	KM 38	MB 38	23140 CCK/W33, C 3140 K
	200	153	160	Tr 220x4	25	6.60	**AH 3240**	HM 3044	HMV 44 E	KM 38	MB 38	23240 CCK/W33
	200	170	177	Tr 220x4	30	7.60	**AH 2340**	HM 3044	HMV 44 E	KM 38	MB 38	22340 CCK/W33
	200	127	140	Tr 210x4	18	4.00	**AH 24040**	HM 42 T	HMV 42 E	KM 38	MB 38	24040 CCK30/W33, C 4040 K30V
	200	158	171	Tr 210x4	18	5.05	**AH 24140**	HM 42 T	HMV 42 E	KM 38	MB 38	24140 CCK30/W33, C 4140 K30V

[1] Width before the sleeve is driven into the bearing bore

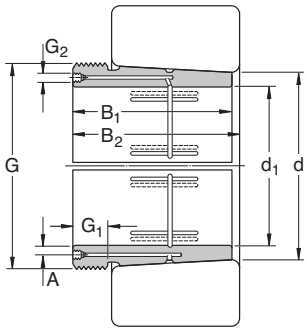

Dimensions								Mass	Designations Withdrawal sleeve only	Removal nut	Hydraulic nut	Lock nut	Locking device	Bearing(s)
d_1	d	B_1	B_2[1]	G	G_1	G_2	A							
mm								kg	–					
200	220	111	117	Tr 230x4	20	G 1/4	6.5	7.3	**AOH 3044 G**	HM 46 T	HMV 46 E	KM 40	MB 40	23044 CCK/W33, C 3044 K
	220	145	151	Tr 240x4	23	G 1/4	9	9.3	**AOH 3144**	HM 3048	HMV 48 E	KM 40	MB 40	23144 CCK/W33, C 3144 K
	220	181	189	Tr 240x4	30	G 1/4	9	13.5	**AOH 2344**	HM 3048	HMV 48 E	KM 40	MB 40	23244 CCK/W33, 22344 CCK/W33
	220	130	136	Tr 240x4	20	G 1/4	9	9.40	**AOH 2244**	HM 3048	HMV 48 E	KM 40	MB 40	22244 CCK/W33, C 2244K
	220	138	152	Tr 230x4	20	G 1/8	6.5	8.2	**AOH 24044**	HM 46 T	HMV 46 E	KM 40	MB 40	24044 CCK30/W33, C 4044 K30V
	220	170	184	Tr 230x4	20	G 1/8	6.5	10	**AOH 24144**	HM 46 T	HMV 46 E	KM 40	MB 40	24144 CCK30/W33
220	240	116	123	Tr 260x4	21	G 1/4	9	7.95	**AOH 3048**	HM 3052	HMV 52 E	HM 44 T	MB 44	23048 CCK/W33, C 3048 K
	240	154	161	Tr 260x4	25	G 1/4	9	12	**AOH 3148**	HM 3052	HMV 52 E	HM 44 T	MB 44	23148 CCK/W33, C 3148 K
	240	189	197	Tr 260x4	30	G 1/4	9	14	**AOH 2348**	HM 3052	HMV 52 E	HM 44 T	MB 44	23248 CCK/W33, 22348 CCK/W33
	240	138	153	Tr 250x4	20	G 1/8	6.5	8.05	**AOH 24048**	HM 50 T	HMV 50 E	HM 48 T	MB 44	24048 CCK30/W33
	240	180	195	Tr 260x4	20	G 1/4	9	11.5	**AOH 24148**	HM 3052	HMV 52 E	HM 48 T	MB 44	24148 CCK30/W33
240	260	128	135	Tr 280x4	23	G 1/4	9	9.6	**AOH 3052**	HM 3056	HMV 56 E	HM 48 T	MB 48	23052 CCK/W33, C 3052 K
	260	155	161	Tr 280x4	23	G 1/4	9	13.5	**AOH 2252 G**	HM 3056	HMV 56 E	HM 48 T	MB 48	22252 CCK/W33
	260	172	179	Tr 280x4	26	G 1/4	9	15.5	**AOH 3152 G**	HM 3056	HMV 56 E	HM 48 T	MB 48	23152 CCK/W33, C 3152 K
	260	205	213	Tr 280x4	30	G 1/4	9	19	**AOH 2352 G**	HM 3056	HMV 56 E	HM 48 T	MB 48	23252 CCK/W33, 22352 CCK/W33
	260	162	178	Tr 280x4	22	G 1/8	6.5	12.5	**AOH 24052 G**	HM 3056	HMV 56 E	HM 48 T	MB 48	24052 CCK30/W33
	260	202	218	Tr 280x4	22	G 1/4	9	14	**AOH 24152**	HM 3056	HMV 56 E	HM 48 T	MB 48	24152 CCK30/W33
260	280	131	139	Tr 300x4	24	G 1/4	9	11	**AOH 3056**	HM 3060	HMV 60 E	HM 52 T	MB 52	23056 CCK/W33, C 3056 K
	280	155	163	Tr 300x4	24	G 1/4	9	15	**AOH 2256 G**	HM 3160	HMV 60 E	HM 52 T	MB 52	22256 CCK/W33
	280	175	183	Tr 300x4	28	G 1/4	9	17	**AOH 3156 G**	HM 3160	HMV 60 E	HM 52 T	MB 52	23156 CCK/W33, C 3156 K
	280	212	220	Tr 300x4	30	G 1/4	9	21.5	**AOH 2356 G**	HM 3160	HMV 60 E	HM 52 T	MB 52	23256 CCK/W33, 22356 CCK/W33
	280	162	179	Tr 300x4	22	G 1/8	6.5	13.5	**AOH 24056 G**	HM 3160	HMV 60 E	HM 52 T	MB 52	24056 CCK30/W33
	280	202	219	Tr 300x4	22	G 1/4	9	15	**AOH 24156**	HM 3160	HMV 60 E	HM 52 T	MB 52	24156 CCK30/W33
280	300	145	153	Tr 320x5	26	G 1/4	9	13	**AOH 3060**	HM 3064	HMV 64 E	HM 56 T	MB 56	23060 CCK/W33, C 3060 KM
	300	170	178	Tr 320x5	26	G 1/4	9	18	**AOH 2260 G**	HM 3164	HMV 64 E	HM 56 T	MB 56	22260 CCK/W33
	300	192	200	Tr 320x5	30	G 1/4	9	20.5	**AOH 3160 G**	HM 3164	HMV 64 E	HM 56 T	MB 56	23160 CCK/W33, C 3160 K
	300	228	236	Tr 320x5	34	G 1/4	9	23.5	**AOH 3260 G**	HM 3164	HMV 64 E	HM 56 T	MB 56	23260 CCK/W33
	300	184	202	Tr 320x5	24	G 1/8	6.5	17	**AOH 24060 G**	HM 3164	HMV 64 E	HM 56 T	MB 56	24060 CCK30/W33, C 4060 K30M
	300	224	242	Tr 320x5	24	G 1/4	9	18.5	**AOH 24160**	HM 3164	HMV 64 E	HM 56 T	MB 56	24160 CCK30/W33

[1] Width before the sleeve is driven into the bearing bore

Withdrawal Sleeves
d_1 300 - 380 mm

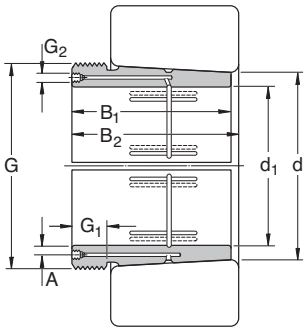

Dimensions								Mass	Designations Withdrawal sleeve only	Removal nut	Hydraulic nut	Lock nut	Locking device	Bearing(s)
d_1	d	B_1	B_2[1)]	G	G_1	G_2	A							
mm								kg	–					
300	320	149	157	Tr 340x5	27	G 1/4	9	16.5	**AOH 3064 G**	HM 3068	HMV 68 E	HM 3060	MS 3060	23064 CCK/W33, C 3064 KM
	320	180	190	Tr 340x5	27	G 1/4	9	20	**AOH 2264 G**	HM 3168	HMV 68 E	HM 3060	MS 3060	22264 CCK/W33
	320	209	217	Tr 340x5	31	G 1/4	9	24.5	**AOH 3164 G**	HM 3168	HMV 68 E	HM 3060	MS 3060	23164 CCK/W33. C 3164 KM
	320	246	254	Tr 340x5	36	G 1/4	9	27.5	**AOH 3264 G**	HM 3168	HMV 68 E	HM 3060	MS 3060	23264 CCK/W33
	320	184	202	Tr 340x5	24	G 1/8	6.5	18	**AOH 24064 G**	HM 3168	HMV 68 E	HM 3060	MS 3060	24064 CCK30/W33
	320	242	260	Tr 340x5	24	G 1/4	9	20.5	**AOH 24164**	HM 3168	HMV 68 E	HM 3060	MS 3060	24164 CCK30/W33
320	340	162	171	Tr 360x5	28	G 1/4	9	19	**AOH 3068 G**	HM 3072	HMV 72 E	HM 3064	MS 3068-64	23068 CCK/W33 C 3068 KM
	340	225	234	Tr 360x5	33	G 1/4	9	28.5	**AOH 3168 G**	HM 3172	HMV 72 E	HM 3064	MS 3068-64	23168 CCK/W33, C 3168 KM
	340	264	273	Tr 360x5	38	G 1/4	9	32	**AOH 3268 G**	HM 3172	HMV 72 E	HM 3064	MS 3068-64	23268 CAK/W33
	340	206	225	Tr 360x5	26	G 1/4	9	18	**AOH 24068**	HM 3172	HMV 72 E	HM 3064	MS 3068-64	24068 CCK30/W33
	340	269	288	Tr 360x5	26	G 1/4	9	25.5	**AOH 24168**	HM 3172	HMV 72 E	HM 3064	MS 3068-64	24168 ECCK30/W33
340	360	167	176	Tr 380x5	30	G 1/4	9	21.0	**AOH 3072 G**	HM 3076	HMV 76 E	HM 3068	MS 3068-64	23072 CCK/W33, C 3072 KM
	360	229	238	Tr 380x5	35	G 1/4	9	30.5	**AOH 3172 G**	HM 3176	HMV 76 E	HM 3068	MS 3068-64	23172 CCK/W33, C 3172 KM
	360	274	283	Tr 380x5	40	G 1/4	9	35.5	**AOH 3272 G**	HM 3176	HMV 76 E	HM 3068	MS 3068-64	23272 CAK/W33
	360	206	226	Tr 380x5	26	G 1/4	9	20.0	**AOH 24072**	HM 3176	HMV 76 E	HM 3068	MS 3068-64	24072 CCK30/W33
	360	269	289	Tr 380x5	26	G 1/4	9	26.0	**AOH 24172**	HM 3176	HMV 76 E	HM 3068	MS 3068-64	24172 ECCK30/W33
360	380	170	180	Tr 400x5	31	G 1/4	9	22.5	**AOH 3076 G**	HM 3080	HMV 80 E	HM 3072	MS 3072	23076 CCK/W33. C 3076 KM
	380	232	242	Tr 400x5	36	G 1/4	9	33.0	**AOH 3176 G**	HM 3180	HMV 80 E	HM 3072	MS 3072	23176 CAK/W33, C 3176 KMB
	380	284	294	Tr 400x5	42	G 1/4	9	42.0	**AOH 3276 G**	HM 3180	HMV 80 E	HM 3072	MS 3072	23276 CAK/W33
	380	208	228	Tr 400x5	28	G 1/4	9	23.5	**AOH 24076**	HM 3180	HMV 80 E	HM 3072	MS 3072	24076 CCK30/W33
	380	271	291	Tr 400x5	28	G 1/4	9	31.0	**AOH 24176**	HM 3180	HMV 80 E	HM 3072	MS 3072	24176 ECAK30/W33
380	400	183	193	Tr 420x5	33	G 1/4	9	26.0	**AOH 3080 G**	HM 3080	HMV 84 E	HM 3076	MS 3080-76	23080 CCK/W33, C 3080 KM
	400	240	250	Tr 420x5	38	G 1/4	9	36.0	**AOH 3180 G**	HM 3184	HMV 84 E	HM 3076	MS 3080-76	23180 CAK/W33, C 3180 KMB
	400	302	312	Tr 420x5	44	G 1/4	9	48.0	**AOH 3280 G**	HM 3184	HMV 84 E	HM 3076	MS 3080-76	23280 CAK/W33
	400	228	248	Tr 420x5	28	G 1/4	9	27.0	**AOH 24080**	HM 3184	HMV 84 E	HM 3076	MS 3080-76	24080 CACK30/W33
	400	278	298	Tr 420x5	28	G 1/4	9	35.0	**AOH 24180**	HM 3184	HMV 84 E	HM 3076	MS 3080-76	24180 ECCK30/W33

[1)] Width before the sleeve is driven into the bearing bore

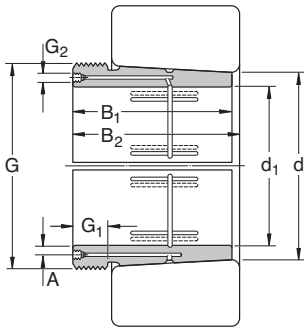

Dimensions								Mass	Designations Withdrawal sleeve only	Removal nut	Hydraulic nut	Lock nut	Locking device	Bearing(s)
d_1	d	B_1	B_2[1)]	G	G_1	G_2	A							
mm								kg	–					
400	420	186	196	Tr 440x5	34	G 1/4	9	28.0	**AOH 3084 G**	HM 3088	HMV 88 E	HM 3080	MS 3080-76	23084 CAK/W33, C 3084 KM
	420	266	276	Tr 440x5	40	G 1/4	9	43.0	**AOH 3184 G**	HM 3188	HMV 88 E	HM 3080	MS 3080-76	23184 CK/W33, C 3184 KM
	420	321	331	Tr 440x5	46	G 1/4	9	54.5	**AOH 3284 G**	HM 3188	HMV 88 E	HM 3080	MS 3080-76	23284 CAK/W33
	420	230	252	Tr 440x5	30	G 1/4	9	29.0	**AOH 24084**	HM 3188	HMV 88 E	HM 3080	MS 3080-76	24084 ECAK30/W33
	420	310	332	Tr 440x5	30	G 1/4	9	39.0	**AOH 24184**	HM 3188	HMV 88 E	HM 3080	MS 3080-76	24184 ECAK30/W33
420	440	194	205	Tr 460x5	35	G 1/4	9	31.0	**AOHX 3088 G**	HM 3092	HMV 92 E	HM 3084	MS 3084	23088 CAK/W33, C 3088 KMB
	440	270	281	Tr 460x5	42	G 1/4	9	46.0	**AOHX 3188 G**	HM 3192	HMV 92 E	HM 3084	MS 3084	23188 CAK/W33, C 3188 KMB
	440	330	341	Tr 460x5	48	G 1/4	9	64.5	**AOHX 3288 G**	HM 3192	HMV 92 E	HM 3084	MS 3084	23288 CAK/W33
	440	242	264	Tr 460x5	30	G 1/4	9	32.0	**AOH 24088**	HM 3192	HMV 92 E	HM 3084	MS 3084	24088 ECAK30/W33
	440	310	332	Tr 460x5	30	G 1/4	9	45.5	**AOH 24188**	HM 3192	HMV 92 E	HM 3084	MS 3084	24188 ECAK30/W33
440	460	202	213	Tr 480x5	37	G 1/4	9	34.0	**AOHX 3092 G**	HM 3096	HMV 96 E	HM 3088	MS 3092-88	23092 CAK/W33, C 3092 KM
	460	285	296	Tr 480x5	43	G 1/4	9	51.5	**AOHX 3192 G**	HM 3196	HMV 96 E	HM 3088	MS 3092-88	23192 CAK/W33, C 3192 KM
	460	349	360	Tr 480x5	50	G 1/4	9	80.0	**AOHX 3292 G**	HM 3196	HMV 96 E	HM 3088	MS 3092-88	23292 CAK/W33
	460	250	273	Tr 480x5	32	G 1/4	9	34.5	**AOH 24092**	HM 3196	HMV 96 E	HM 3088	MS 3092-88	24092 ECAK30/W33
	460	332	355	Tr 480x5	32	G 1/4	9	50.0	**AOH 24192**	HM 3196	HMV 96 E	HM 3088	MS 3092-88	24192 ECAK30/W33
460	480	205	217	Tr 500x5	38	G 1/4	9	34.0	**AOHX 3096 G**	HM 30/500	HMV 100 E	HM 3092	MS 3092-88	23096 CAK/W33, C 3096 KM
	480	295	307	Tr 500x5	45	G 1/4	9	63.0	**AOHX 3196 G**	HM 31/500	HMV 100 E	HM 3092	MS 3092-88	23196 CAK/W33, C 3196 KMB
	480	364	376	Tr 500x5	52	G 1/4	9	81.0	**AOHX 3296 G**	HM 31/500	HMV 100 E	HM 3092	MS 3092-88	23296 CAK/W33
	480	250	273	Tr 500x5	32	G 1/4	9	36.5	**AOH 24096**	HM 31/500	HMV 100 E	HM 3092	MS 3092-88	24096 ECAK30/W33
	480	340	363	Tr 500x5	32	G 1/4	9	51.5	**AOH 24196**	HM 31/500	HMV 100 E	HM 3092	MS 3092-88	24196 ECAK30/W33
480	500	209	221	Tr 530x6	40	G 1/4	9	41.0	**AOHX 30/500 G**	HM 30/530	HMV 106 E	HM 3096	MS 30/500-96	230/500 CAK/W33, C 30/500 KM
	500	313	325	Tr 530x6	47	G 1/4	9	66.5	**AOHX 31/500 G**	HM 31/530	HMV 106 E	HM 3096	MS 30/500-96	231/500 CAK/W33, C 31/500 KM
	500	393	405	Tr 530x6	54	G 1/4	9	89.5	**AOHX 32/500 G**	HM 31/530	HMV 106 E	HM 3096	MS 30/500-96	232/500 CAK/W33
	500	253	276	Tr 530x6	35	G 1/4	9	43.0	**AOH 240/500**	HM 31/530	HMV 106 E	HM 3096	MS 30/500-96	240/500 ECAK30/W33
	500	360	383	Tr 530x6	35	G 1/4	9	63.0	**AOH 241/500**	HM 31/530	HMV 106 E	HM 3096	MS 30/500-96	241/500 ECAK30/W33, C 41/500 K30MB
500	530	230	242	Tr 560x6	45	G 1/4	10	63.5	**AOH 30/530**	HM 30/560	HMV 112 E	HM 30/500	MS 30/500-96	230/530 CAK/W33, C 30/530 KM
	530	325	337	Tr 560x6	53	G 1/4	10	93.5	**AOH 31/530**	HM 31/560	HMV 112 E	HM 30/500	MS 30/500-96	231/530 CAK/W33, C 31/530 KM
	530	412	424	Tr 560x6	57	G 1/4	10	142	**AOH 32/530 G**	HM 31/560	HMV 112 E	HM 30/500	MS 30/500-96	232/530 CAK/W33
	530	285	309	Tr 560x6	35	G 1/4	9	64.5	**AOH 240/530 G**	HM 31/560	HMV 112 E	HM 30/500	MS 30/500-96	240/530 ECAK30/W33
	530	370	394	Tr 560x6	35	G 1/4	9	92.0	**AOH 241/530 G**	HM 31/560	HMV 112 E	HM 30/500	MS 30/500-96	241/530 ECAK30/W33

[1)] Width before the sleeve is driven into the bearing bore

Withdrawal Sleeves
d_1 530 - 670 mm

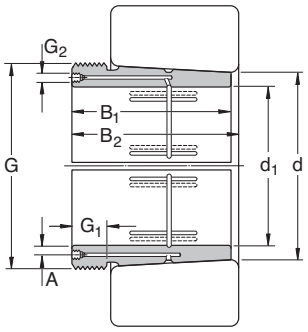

Dimensions								Mass	Designations Withdrawal sleeve only	Removal nut	Hydraulic nut	Lock nut	Locking device	Bearing(s)
d_1	d	B_1	B_2[1)]	G	G_1	G_2	A							
mm								kg	–					
530	560	240	252	Tr 600x6	45	G 1/4	11	73.5	**AOHX 30/560**	HM 30/600	HMV 120 E	HM 30/530	MS 30/600-530	230/560 CAK/W33, C 30/560 KM
	560	335	347	Tr 600x6	55	G 1/4	11	107	**AOH 31/560**	HM 31/600	HMV 120 E	HM 30/530	MS 30/600-530	231/560 CAK/W33, C 31/560 KMB
	560	422	434	Tr 600x6	57	G 1/4	11	143	**AOHX 32/560**	HM 31/600	HMV 120 E	HM 30/530	MS 30/600-530	232/560 CAK/W33
	560	296	320	Tr 600x6	38	G 1/4	9	71.0	**AOH 240/560 G**	HM 31/600	HMV 120 E	HM 30/530	MS 30/600-530	240/560 ECAK30/W33
	560	393	417	Tr 600x6	38	G 1/4	9	107	**AOH 241/560 G**	HM 31/600	HMV 120 E	HM 30/530	MS 30/600-530	241/560 ECAK30/W33
570	600	245	259	Tr 630x6	45	G 1/4	11	77.0	**AOHX 30/600**	HM 30/630	HMV 126 E	HM 30/560	MS 30/560	230/600 CAK/W33, C 30/600 KM
	600	355	369	Tr 630x6	55	G 1/4	11	120	**AOHX 31/600**	HM 31/630	HMV 126 E	HM 30/560	MS 30/560	231/600 CAK/W33, C 31/600 KMB
	600	445	459	Tr 630x6	57	G 1/4	11	159	**AOHX 32/600 G**	HM 31/630	HMV 126 E	HM 30/560	MS 30/560	232/600 CAK/W33
	600	310	336	Tr 630x6	38	G 1/4	9	108	**AOHX 240/600**	HM 31/630	HMV 126 E	HM 30/560	MS 30/560	240/600 ECAK30/W33
	600	413	439	Tr 630x6	38	G 1/4	9	120	**AOHX 241/600**	HM 31/630	HMV 126 E	HM 30/560	MS 30/560	241/600 ECAK30/W33
600	630	258	272	Tr 670x6	46	G 1/4	11	88.5	**AOH 30/630**	HM 30/670	HMV 134 E	HM 30/600	MS 30/600-530	230/630 CAK/W33, C 30/630 KM
	630	375	389	Tr 670x6	60	G 1/4	11	139	**AOH 31/630**	HM 31/670	HMV 134 E	HM 30/600	MS 30/600-530	231/630 CAK/W33, C 31/630 KMB
	630	475	489	Tr 670x6	63	G 1/4	11	188	**AOH 32/630 G**	HM 31/670	HMV 134 E	HM 30/600	MS 30/600-530	232/630 CAK/W33
	630	330	356	Tr 670x6	40	G 1/4	9	101	**AOH 240/630 G**	HM 31/670	HMV 134 E	HM 30/600	MS 30/600-530	240/630 ECAK30/W33
	630	440	466	Tr 670x6	40	G 1/4	9	139	**AOH 241/630 G**	HM 31/670	HMV 134 E	HM 30/600	MS 30/600-530	241/630 ECAK30/W33
630	670	280	294	Tr 710x7	50	G 1/4	12	125	**AOH 30/670**	HM 30/710	HMV 142 E	HM 30/630	MS 30/630	230/670 CAK/W33, C 30/670 KM
	670	395	409	Tr 710x7	59	G 1/4	12	189	**AOHX 31/670**	HM 31/710	HMV 142 E	HM 30/630	MS 30/630	231/670 CAK/W33, C 31/670 KMB
	670	500	514	Tr 710x7	62	G 1/4	12	252	**AOH 32/670 G**	HM 31/710	HMV 142 E	HM 30/630	MS 30/630	232/670 CAK/W33
	670	348	374	Tr 710x7	40	G 1/4	12	140	**AOH 240/670 G**	HM 31/710	HMV 142 E	HM 30/630	MS 30/630	240/670 ECAK30/W33
	670	452	478	Tr 710x7	40	G 1/4	12	180	**AOH 241/670**	HM 31/710	HMV 142 E	HM 30/630	MS 30/630	241/670 ECAK30/W33
670	710	286	302	Tr 750x7	50	G 1/4	15	138	**AOHX 30/710**	HM 30/750	HMV 150 E	HM 30/670	MS 30/670	230/710 CAK/W33, C 30/710 KM
	710	405	421	Tr 750x7	60	G 1/4	15	207	**AOHX 31/710**	HM 31/750	HMV 150 E	HM 30/670	MS 30/670	231/710 CAK/W33, C 31/710 KMB
	710	515	531	Tr 750x7	65	G 1/4	15	278	**AOH 32/710 G**	HM 31/750	HMV 150 E	HM 30/670	MS 30/670	232/710 CAK/W33
	710	360	386	Tr 750x7	45	G 1/4	12	155	**AOH 240/710 G**	HM 31/750	HMV 150 E	HM 30/670	MS 30/670	240/710 ECAK30/W33, C 40/710 K30M
	710	483	509	Tr 750x7	45	G 1/4	12	205	**AOH 241/710**	HM 31/750	HMV 150 E	HM 30/670	MS 30/670	241/710 ECAK30/W33

[1)] Width before the sleeve is driven into the bearing bore

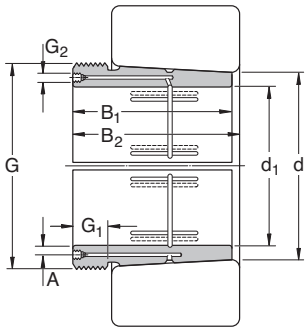

Dimensions								Mass	Designations					
									Withdrawal sleeve only	Removal nut	Hydraulic nut	Lock nut	Locking device	Bearing(s)
d_1	d	B_1	B_2[1]	G	G_1	G_2	A							
mm								kg	–					
710	750	300	316	Tr 800x7	50	G 1/4	15	145	**AOH 30/750**	HM 30/800	HMV 160 E	HM 30/710	MS 30/710	230/750 CAK/W33, C 30/750 KMB
	750	425	441	Tr 800x7	60	G 1/4	15	238	**AOH 31/750**	HM 31/800	HMV 160 E	HM 30/710	MS 30/710	231/750 CAK/W33, C 31/750 KMB
	750	540	556	Tr 800x7	65	G 1/4	15	320	**AOH 32/750**	HM 31/800	HMV 160 E	HM 30/710	MS 30/710	232/750 CAK/W33
	750	380	408	Tr 800x7	45	G 1/4	12	178	**AOH 240/750 G**	HM 31/800	HMV 160 E	HM 30/710	MS 30/710	240/750 ECAK30/W33
	750	520	548	Tr 800x7	45	G 1/4	12	240	**AOH 241/750 G**	HM 31/800	HMV 160 E	HM 30/710	MS 30/710	241/750 ECAK30/W33
750	800	308	326	Tr 850x7	50	G 1/4	15	204	**AOH 30/800**	HM 30/850	HMV 170 E	HM 30/750	MS 30/800-750	230/800 CAK/W33, C 30/800 KMB
	800	438	456	Tr 850x7	63	G 1/4	15	305	**AOH 31/800**	HM 31/850	HMV 170 E	HM 30/750	MS 30/800-750	231/800 CAK/W33, C 31/800 KMB
	800	550	568	Tr 850x7	67	G 1/4	15	401	**AOH 32/800**	HM 31/850	HMV 170 E	HM 30/750	MS 30/800-750	232/800 CAK/W33
	800	395	423	Tr 850x7	50	G 1/4	15	237	**AOH 240/800 G**	HM 31/850	HMV 170 E	HM 30/750	MS 30/800-750	240/800 ECAK30/W33
	800	525	553	Tr 850x7	50	G 1/4	15	318	**AOH 241/800 G**	HM 31/850	HMV 170 E	HM 30/750	MS 30/800-750	241/800 ECAK30/W33
800	850	325	343	Tr 900x7	53	G 1/4	15	230	**AOH 30/850**	HM 30/900	HMV 180 E	HM 30/800	MS 30/800-750	230/850 CAK/W33, C 30/850 KMB
	850	462	480	Tr 900x7	62	G 1/4	15	345	**AOH 31/850**	HM 31/900	HMV 180 E	HM 30/800	MS 30/800-750	231/850 CAK/W33, C 31/850 KMB
	850	585	603	Tr 900x7	70	G 1/4	15	461	**AOH 32/850**	HM 31/900	HMV 180 E	HM 30/800	MS 30/800-750	232/850 CAK/W33
	850	415	445	Tr 900x7	50	G 1/4	15	265	**AOH 240/850 G**	HM 31/900	HMV 180 E	HM 30/800	MS 30/800-750	240/850 ECAK30/W33
	850	560	600	Tr 900x7	60	G 1/4	15	368	**AOH 241/850**	HM 31/900	HMV 180 E	HM 30/800	MS 30/800-750	241/850 ECAK30/W33
850	900	335	355	Tr 950x8	55	G 1/4	15	250	**AOH 30/900**	HM 30/950	HMV 190 E	HM 30/850	MS 30/900-850	230/900 CAK/W33, C 30/900 KM
	900	475	495	Tr 950x8	63	G 1/4	15	379	**AOH 31/900**	HM 31/950	HMV 190 E	HM 30/850	MS 30/900-850	231/900 CAK/W33
	900	585	605	Tr 950x8	70	G 1/4	15	489	**AOH 32/900**	HM 31/950	HMV 190 E	HM 30/850	MS 30/900-850	232/900 CAK/W33
	900	430	475	Tr 950x8	55	G 1/4	15	296	**AOH 240/900**	HM 31/950	HMV 190 E	HM 30/850	MS 30/900-850	240/900 ECAK30/W33
	900	575	620	Tr 950x8	60	G 1/4	15	402	**AOH 241/900**	HM 31/950	HMV 190 E	HM 30/850	MS 30/900-850	241/900 ECAK30/W33
900	950	355	375	Tr 1000x8	55	G 1/4	15	285	**AOH 30/950**	HM 30/1000	HMV 200 E	HM 30/900	MS 30/900-850	230/950 CAK/W33, C 30/950 KMB
	950	500	520	Tr 1000x8	62	G 1/4	15	426	**AOH 31/950**	HM 31/1000	HMV 200 E	HM 30/900	MS 30/900-850	231/950 CAK/W33
	950	600	620	Tr 1000x8	70	G 1/4	15	533	**AOH 32/950**	HM 31/1000	HMV 200 E	HM 30/900	MS 30/900-850	232/950 CAK/W33
	950	467	512	Tr 1000x8	55	G 1/4	15	340	**AOH 240/950**	HM 31/1000	HMV 200 E	HM 30/900	MS 30/900-850	240/950 CAK30/W33
	950	605	650	Tr 1000x8	60	G 1/4	15	449	**AOH 241/950**	HM 31/1000	HMV 200 E	HM 30/900	MS 30/900-850	241/950 CAK30/W33
950	1 000	365	387	Tr 1060x8	57	G 1/4	15	318	**AOH 30/1000**	HM 30/1060	HMV 212 E	HM 30/950	MS 30/950	230/1000 CAKF/W33, C 30/1000 KM
	1 000	525	547	Tr 1060x8	63	G 1/4	15	485	**AOH 31/1000**	HM 31/1060	HMV 212 E	HM 30/950	MS 30/950	231/1000 CAKF/W33, C 31/1000 KMB
	1 000	630	652	Tr 1060x8	70	G 1/4	15	608	**AOH 32/1000**	HM 31/1060	HMV 212 E	HM 30/950	MS 30/950	232/1000 CAK/W33
	1 000	469	519	Tr 1060x8	57	G 1/4	15	369	**AOH 240/1000**	HM 31/1060	HMV 212 E	HM 30/950	MS 30/950	240/1000 CAK30F/W33
	1 000	645	695	Tr 1060x8	65	G 1/4	15	519	**AOH 241/1000**	HM 31/1060	HMV 212 E	HM 30/950	MS 30/950	241/1000 ECAK30/W33
1000	1 060	385	407	Tr 1120x8	60	G 1/4	15	406	**AOH 30/1060**	HM 30/1120	HMV 224 E	HM 30/1000	MS 30/1000	230/1060 CAKF/W33
	1 060	540	562	Tr 1120x8	65	G 1/4	15	599	**AOH 31/1060**	HM 30/1120	HMV 224 E	HM 30/1000	MS 30/1000	231/1060 CAK/W33
	1 060	498	548	Tr 1120x8	60	G 1/4	15	479	**AOH 240/1060**	HM 30/1120	HMV 224 E	HM 30/1000	MS 30/1000	240/1060 CAK30F/W33
	1 060	665	715	Tr 1120x8	65	G 1/4	15	652	**AOH 241/1060**	HM 30/1120	HMV 224 E	HM 30/1000	MS 30/1000	241/1060 CAK30/W33

[1] Width before the sleeve is driven into the bearing bore

Shaft dimensions and thread details for Lock Nuts of series KM 0 through 40

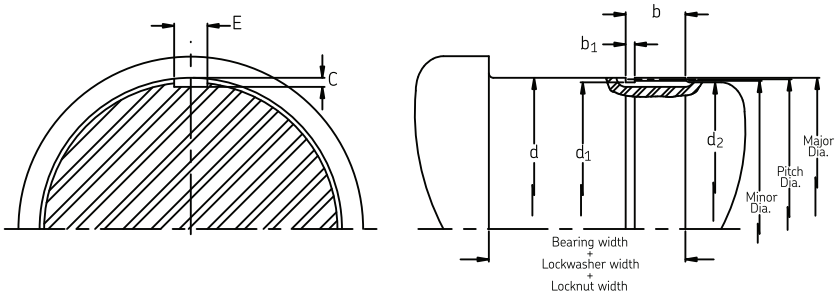

Bearing[1] Bore d	Lock Nut No.	Thread Designation	Major Dia. Max.	Min.	Pitch[2] Dia. Max.	Min.	Minor Dia.	Pitch P	Relief Dia. d_1	Extens. Dia. Max. d_2	b	b_1	C	E
mm			mm											
10	KM 0	M 10 x 0.75	9,978	9,734	9,491	9,351	9,058	0,75	8,8	7,5	-	-	1,5	3,5
12	KM 1	M 12 x 1	11,974	10,694	11,324	11,134	10,747	1	10,5	9,5	-	-	1,5	3,5
15	KM 2	M15 x 1	14,974	14,694	14,324	14,134	13,747	1	13,5	12,5	-	-	1,5	4,5
17	KM 3	M 17 x 1	16,974	16,694	16,324	16,134	15,747	1	15,5	15,5	9	2,5	1,5	4,5
20	KM 4	M 20 x 1	19,974	19,694	19,324	19,134	18,747	1	18,5	18,5	10	2,5	1,5	4,5
25	KM 5	M 25 x 1.5	24,968	24,593	23,994	23,758	23,127	1,5	22,7	22,7	12	3	2	5,5
30	KM 6	M 30 x 1.5	29,968	29,593	28,994	28,758	28,127	1,5	27,5	27,5	11,75	3	2,5	5,5
35	KM 7	M 35 x 1.5	34,968	34,593	33,994	33,758	33,127	1,5	32,7	32,5	12,75	3	2,5	7
40	KM 8	M 40 x 1.5	39,968	39,593	38,994	38,758	38,127	1,5	37,7	37,5	13,75	3	2,5	7
45	KM 9	M 45 x 1.5	44,968	44,593	43,994	43,758	43,127	1,5	42,7	42,5	14,75	3	2,5	7
50	KM 10	M 50 x 1.5	49,968	49,593	48,994	48,744	48,127	1,5	47,7	47,5	15,75	3	2,5	7
55	KM 11	M 55 x 2	54,962	54,512	53,663	53,383	52,508	2	52	52	17	4	2,5	9
60	KM 12	M 60 x 2	59,962	59,512	58,663	58,383	57,508	2	57	57	18	4	2,5	9
65	KM 13	M 65 x 2	64,962	64,512	63,663	63,383	62,508	2	62	62	19	4	2,5	9
70	KM 14	M 70 x 2	69,962	69,512	68,663	68,383	67,508	2	67	66,5	19	4	3,5	9
75	KM 15	M 75 x 2	74,962	74,512	73,663	73,383	72,508	2	72	71,5	20	4	3,5	9
80	KM 16	M 80 x 2	79,962	79,512	78,663	78,383	77,508	2	77	76,5	22	4	3,5	11
85	KM 17	M 85 x 2	84,962	84,512	83,663	83,383	82,508	2	82	81,5	23	4	3,5	11
90	KM 18	M 90 x 2	89,962	89,512	88,663	88,383	87,508	2	87	86,5	23	4	3,5	11
95	KM 19	M 95 x 2	94,962	94,512	93,663	93,363	92,508	2	92	91,5	24	4	3,5	11
100	KM 20	M 100 x 2	99,962	99,512	98,663	98,363	97,508	2	96,8	96,5	25	4	3,5	13
105	KM 21	M 105 x 2	104,962	104,512	103,663	103,363	102,508	2	101,8	100,5	25	4	4,5	13
110	KM 22	M 110 x 2	109,962	109,512	108,663	108,363	107,508	2	106,8	105,5	26	4	4,5	13
115	KM 23	M 115 x 2	114,962	114,512	113,663	113,363	112,508	2	111,8	110,5	26	4	4,5	13
120	KM 24	M 120 x 2	119,962	119,512	118,663	118,363	117,508	2	116,8	115	27	4	5	16
125	KM 25	M 125 x 2	124,962	124,512	123,663	123,363	122,508	2	121,8	120	28	4	5	16
130	KM 26	M 130 x 2	129,962	129,512	128,663	128,363	127,508	2	126,8	125	28	4	5	16

[1] For recommended shaft tolerances see tolerance tables in SKF Bearing Catalogue 925 or CDN992E
[2] Pitch diameter and tolerance are applicable to steel nuts. When nut or shaft is made of other materials, having a tendency to seize, reduce the maximum of the pitch and major diameters of the shaft thread by 20% of the listed pitch diameter tolerance.

Shaft dimensions and thread details for Lock Nuts of series KM 0 through 40

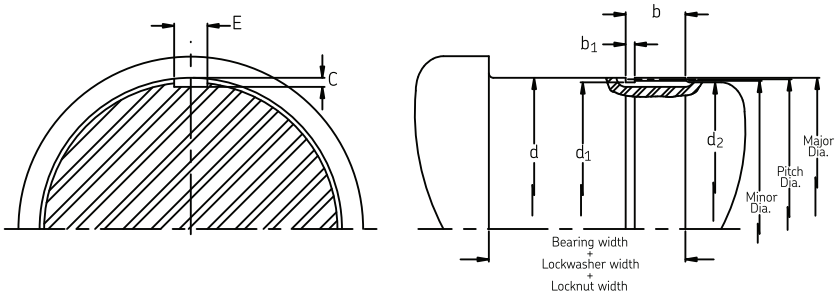

Bearing[1] Bore d	Lock Nut No.	Thread Designation	Major Dia. Max.	Min.	Pitch[2] Dia. Max.	Min.	Minor Dia.	Pitch P	Relief Dia. d_1	Extens. Dia. Max. d_2	b	b_1	C	E
mm			mm											
135	KM 27	M 135 x 2	134,962	134,512	133,663	133,363	132,508	2	131,8	130	29	4	5	16
140	KM 28	M 140 x 2	139,962	139,512	138,663	138,363	137,508	2	136,8	135	29	4	5	18
145	KM 29	M 145 x 2	144,962	144,512	143,663	143,363	142,508	2	-	-		-	-	-
150	KM 30	M 150 x 2	149,962	149,512	148,663	148,363	147,508	2	146,8	145	31	4	5	18
155	KM 31	M 155 x 3	154,952	154,352	153,003	152,648	151,271	3	-	-		-	-	-
160	KM 32	M 160 x 3	159,952	159,352	158,003	157,648	156,271	3	155,5	154	35	6	6	20
165	KM 33	M 165 x 3	164,952	164,352	163,003	162,648	161,271	3	-	-		-	-	-
170	KM 34	M 170 x 3	169,952	169,352	168,003	167,648	166,271	3	165,5	164	36	6	6	20
-	-	M 175 x 3	174,952	174,352	173,003	172,648	171,271	3	-	-		-	-	-
180	KM 36	M 180 x 3	179,952	179,352	178,003	177,648	176,271	3	175,5	174	37,5	6	6	22
-	-	M 185 x 3	184,952	184,352	183,003	182,648	181,271	3	-	-		-	-	-
190	KM 38	M 190 x 3	189,952	189,352	188,003	187,648	186,271	3	185,5	184	38,5	6	6	22
-	-	M 195 x 3	194,952	194,352	193,003	192,648	191,271	3	-	-		-	-	-
200	KM 40	M 200 x 3	199,952	199,352	198,003	197,648	196,271	3	195,5	194	39,5	6	6	22

[1] For recommended shaft tolerances see tolerance tables in SKF Bearing Catalogue 925 or CDN992E
[2] Pitch diameter and tolerance are applicable to steel nuts. When nut or shaft is made of other materials, having a tendency to seize, reduce the maximum of the pitch and major diameters of the shaft thread by 20% of the listed pitch diameter tolerance.

Shaft dimensions and thread details for Lock Nuts of series N00 through N44

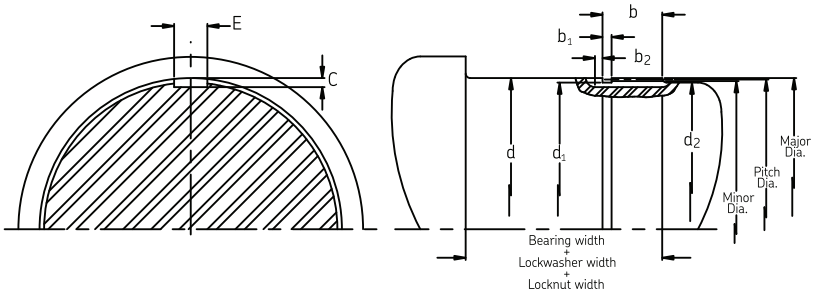

Bearing Bore d	Lock Nut No.	Major Dia. Max.	Min.	Pitch Dia. Max.	Min.	Minor Dia.	Threads Per Inch	Relief Dia. d_1	Extens. Dia. Max.d_2	b	b_1	b_2	C	E
mm		in												
10	N 00	0.3910	0,3856	0,3707	0,3681	0,3527	32	0,3421	0,312	0,297	0,078	0,094	0,062	0,125
12	N 01	0.4690	0,4636	0,4487	0,4461	0,4307	32	0,4201	0,406	0,391	0,078	0,094	0,062	0,125
15	N 02	0.5860	0,5806	0,5657	0,5627	0,5477	32	0,5371	0.500	0,391	0,078	0,094	0,078	0,125
17	N 03	0.6640	0,6586	0,6437	0,6407	0,6257	32	0,6151	0,562	0,422	0,078	0,094	0,078	0,125
20	N 04	0.7810	0,7756	0,7607	0,7573	0,7427	32	0,7321	0,719	0,453	0,078	0,094	0,078	0,188
25	N 05	0.9690	0,9636	0,9487	0,9453	0,9307	32	0,9201	0,875	0,484	0,078	0,125	0,094	0,188
30	N 06	1.1730	1,1648	1,1369	1,1329	1,1048	18	1,0942	1,062	0,484	0,109	0,125	0,094	0,188
35	N 07	1.3760	1,3678	1,3399	1,3359	1,3078	18	1,2972	1.250	0,516	0,109	0,125	0,094	0,188
40	N 08	1.5630	1,5548	1,5269	1,5224	1,4948	18	1,4842	1,469	0,547	0,109	0,125	0,094	0,312
45	N 09	1.7670	1,7588	1,7309	1,7264	1,6988	18	1,6882	1,688	0,547	0,141	0,156	0,094	0,312
50	N 10	1.9670	1,9588	1,9309	1,9264	1,8988	18	1,8882	1,875	0,609	0,141	0,156	0,094	0,312
55	N 11	2.1570	2,1488	2,1209	2,1158	2,0888	18	2,0782	2,062	0,609	0,141	0,156	0,125	0,312
60	N 12	2.3600	2,3518	2,3239	2,3188	2,2918	18	2,2812	2.250	0,641	0,141	0,156	0,125	0,312
65	N 13	2.5480	2,5398	2,5119	2,5068	2,4798	18	2,4692	2,438	0,672	0,141	0,156	0,125	0,312
70	N 14	2.7510	2,7428	2,7149	2,7098	2,6828	18	2,6722	2,625	0,672	0,141	0.250	0,125	0,312
75	AN 15	2.9330	2,9218	2,8789	2,8735	2,8308	12	2,8095	2,781	0,703	0,172	0.250	0,125	0,312
80	AN 16	3.1370	3,1258	3,0829	3.0770	3,0348	12	3,0135	3.000	0,703	0,172	0.250	0,125	0,375
85	AN 17	3.3400	3,3288	3,2859	3.2800	3,2378	12	3,2165	3,188	0,734	0,172	0.250	0,125	0,375
90	AN 18	3.5270	3,5158	3,4729	3,4655	3,4248	12	3,4035	3,375	0,828	0,172	0.250	0,156	0,375
95	AN 19	3.7300	3,7188	3,6759	3,6685	3,6278	12	3,6055	3,562	0,859	0,172	0.250	0,156	0,375
100	AN 20	3.9180	3,9068	3,8639	3,8565	3,8158	12	3,7945	3,781	0,891	0,172	0,312	0,156	0,375
105	AN 21	4.1220	4,1108	4,0679	4,0596	4,0198	12	3,9985	3,938	0,891	0,172	0,312	0,156	0,375
110	AN 22	4.3250	4,3138	4,2709	4,2628	4,2228	12	4,2015	4,188	0,922	0,172	0,312	0,188	0,375
120	AN 24	4.7160	4,7048	4,6619	4,6536	4,6138	12	4,5925	4,562	0,953	0,172	0,312	0,188	0,375
130	AN 26	5.1060	5,0948	5,0519	5,0436	5,0038	12	4,9825	4,938	1,016	0,172	0,312	0,188	0.500
140	AN 28	5.4970	5,4858	5,4429	5,4346	5,3948	12	5,3735	5,312	1,078	0,172	0,312	0,188	0,625

Shaft dimensions and thread details for Lock Nuts of series N00 through N44

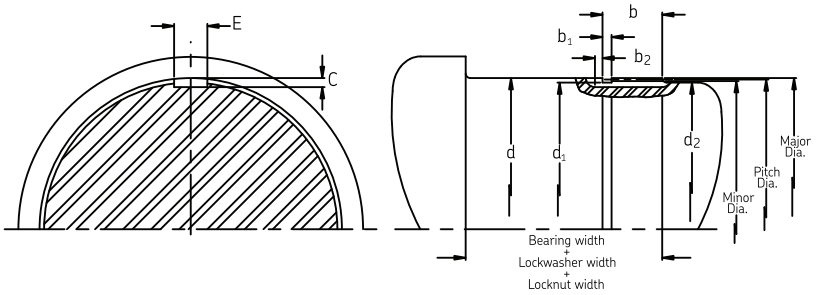

Bearing Bore d	Lock Nut No.	Major Dia. Max.	Min.	Pitch Dia. Max.	Min.	Minor Dia.	Threads Per Inch	Relief Dia. d_1	Extens. Dia. Max. d_2	b	b_1	b_2	C	E
mm		in												
150	AN 30	5.8880	5,8768	5,8339	5,8256	5,7858	12	5,7645	5,719	1,141	0,172	0,375	0,219	0,625
160	AN 32	6.2840	6,2728	6,2028	6,1937	6,1306	8	6,1093	6,125	1,203	0,266	0,375	0,234	0,625
170	AN 34	6.6590	6,6478	6,5778	6,5687	6,5056	8	6,4843	6.500	1,234	0,266	0,375	0,234	0.750
180	AN 36	7.0660	7,0548	6,9848	6,9757	6,9126	8	6,8913	6,906	1,266	0,266	0,375	0,234	0.750
190	AN 38	7.4720	7,4608	7,3908	7,3817	7,3186	8	7,2973	7,312	1,297	0,266	0,375	0,234	0.750
200	AN 40	7.8470	7,8358	7,7658	7,7544	7,6936	8	7,6723	7,688	1,359	0,266	0,375	0,234	0,875
220	N 44	8.6280	8,6168	8,5468	8,5347	8,4746	8	8,4533	8,312	1,391	0,266	0,188	0,375	1,062

Shaft dimensions and thread details for Lock Nuts Light section of series N022 through N096

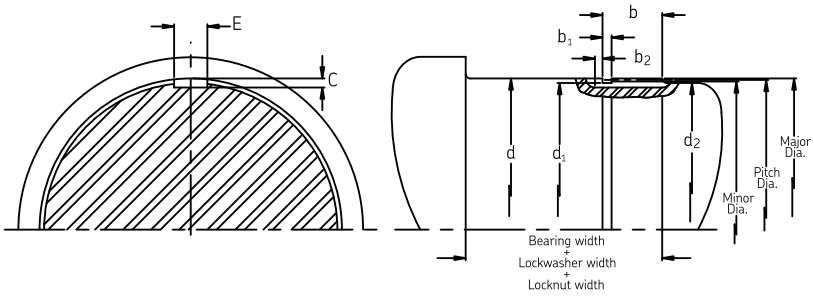

Bearing Bore d	Lock Nut No.	Major Dia. Max.	Min.	Pitch Dia. Max.	Min.	Minor Dia.	Threads Per Inch	Relief Dia. d_1	Extens. Dia. Max.d_2	b	b_1	b_2	C	E
mm		in												
110	N 022	4.3250	4,3138	4,2709	4,2626	4,2228	12	4,2015	4,188	0,922	0,172	0,312	0,188	0,375
120	N 024	4.7160	4,7048	4,6619	4,6536	4,6138	12	4,5925	4,562	0,953	0,172	0,312	0,188	0,375
130	N 026	5.1060	5,0948	5,0519	5,0436	5,0038	12	4,9825	4,938	1,016	0,172	0,312	0,188	0.500
140	N 028	5.4970	5,5006	5,4429	5,4346	5,3948	12	5,3735	5,312	1,078	0,172	0,312	0,188	0,625
150	N 030	5.8880	5,8768	5,8339	5,8256	5,7858	12	5,7645	5,719	1,141	0,172	0,375	0,219	0,625
160	N 032	6.2840	6,2688	6,2028	6,1937	6,1306	8	6,1093	6,125	1,203	0,266	0,375	0,234	0,625
170	N 034	6.6590	6,6438	6,5778	6,5687	6,5056	8	6,4843	6.500	1,234	0,266	0,375	0,234	0.750
180	N036	7.0660	7,0508	6,9848	6,9757	6,9126	8	6,8913	6,906	1,266	0,266	0,375	0,234	0.750
190	N 038	7.4720	7,4568	7,3908	7,3817	7,3186	8	7,2973	7,312	1,297	0,266	0,375	0,234	0.750
200	N 040	7.8470	7,8318	7,7658	7,7544	7,6936	8	7,6723	7,688	1,359	0,266	0,375	0,234	0,875
220	N 044	8.6280	8,6128	8,5468	8,5347	8,4746	8	8,4533	8,312	1,391	0,266	0,188	0,375	1,062
240	N 048	9.4420	9,4218	9,3337	9,3213	9,2374	6	9,2005	9,188	1,734	0,266	-	0,438	1,125
260	N 052	10.1920	10,1718	10,0837	10,0707	9,9874	6	9,9505	9,938	1,797	0,266	-	0,438	1,188
280	N 056	11.0040	10,9838	10,8957	10,8827	10,7994	6	10,7625	10.750	1,891	0,266	-	0,438	1.250
300	N 060	11.7850	11,7648	11,6767	11,6637	11,5804	6	11,5435	11.500	1,953	0,266	-	0,438	1,375
320	N 064	12.5620	12,5418	12,4537	12,4402	12,3574	6	12,3205	12,312	2,047	0,266	-	0,438	1,438
340	N 068	13.3030	13.2870	13.2030	13.1870	13.0830	5	13.0460	13,062	2,172	0,266	-	0,438	1.500
360	N 072	14.1340	14.1180	14.0340	14.0180	13.9140	5	13.8770	13,812	2,172	0,266	-	0.500	1.500
380	N 076	14.9210	14.9050	14.8210	14.8050	14.7010	5	14.6640	14,625	2,297	0,266	-	0.500	1.500
400	N 080	15.7090	15.6930	15.6090	15.5930	15.4890	5	15.4520	15,375	2,453	0,266	-	0.500	1,625
420	N 084	16.4960	16.4800	16.3960	16.3800	16.2760	5	16.2390	16,188	2,453	0,266	-	0.500	1,625
440	N 088	17.2830	17.2670	17.1830	17.1670	17.0630	5	17.0260	17.000	2,766	0,266	-	0.500	1,812
460	N 092	18.0710	18.0550	17.9710	17.9550	17.8510	5	17.8140	17.750	2,766	0,266	-	0.500	1,812
480	N 096	18.8580	18.8420	18.7580	18.7420	18.6380	5	18.6010	18.500	2,766	0,266	-	0.500	1,812

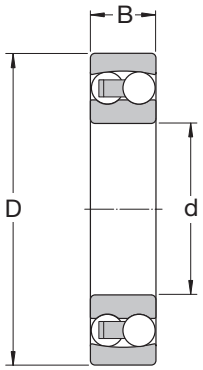

Bearing Designation		Dimensions			Basic Load Ratings		Speed Limit		Mass
					Dynamic	Static			
Cylindrical Bore	Tapered Bore	d	D	B	C	C_0	Ref.	Limit	
		mm/in			kN/lb		r/min		kg/lb
1205E	1205EK	25	52	15	14.3	4.0	28 000	18 000	0.14
		0.9843	2.0472	0.5906	3 215	899			0.31
1206E	1206EK	30	62	16	15.6	4.65	24 000	15 000	0.22
		1.1811	2.4409	0.6299	3 507	1 045			0.49
1207E	1207EK	35	72	17	19.0	6.0	20 000	13 000	0.32
		1.3780	2.8346	0.6693	4 271	1 349			0.71
1208E	1208EK	40	80	18	19.9	6.95	18 000	11 000	0.42
		1.5748	3.1496	0.7087	4 474	1 562			0.93
1209E	1209EK	45	85	19	22.9	7.8	17 000	11 000	0.47
		1.7717	3.3465	0.7480	5 148	1 753			1.04
1210E	1210EK	50	90	20	26.5	9.15	16 000	10 000	0.53
		1.9685	3.5433	0.7874	5 957	2 057			1.17
1211E	1211EK	55	100	21	27.6	10.6	14 000	9 000	0.71
		2.1654	3.9370	0.8268	6 204	2 383			1.57
1212E	1212EK	60	110	22	31.2	12.2	12 000	8 500	0.90
		2.3622	4.3307	0.8661	7 014	2 743			1.98
1213E	1213EK	65	120	23	35.1	14.0	11 000	7 000	1.15
		2.5591	4.7244	0.9055	7 890	3 147			2.54
1215	1215K	75	130	25	39.0	15.6	10 000	6 700	1.35
		2.9528	5.1181	0.9843	8 767	3 507			2.98
1216	1216K	80	140	26	39.7	17.0	9 500	6 000	1.65
		3.1496	5.5118	1.0236	8 925	3 822			3.64
1217	1217K	85	150	28	48.8	20.8	9 000	5 600	2.05
		3.3465	5.9055	1.1024	10 970	4 676			4.52
1218	1218K	90	160	30	57.2	23.6	8 500	5 300	2.50
		3.5433	6.2992	1.1811	12 859	5 305			5.51
1219	1219K	95	170	32	63.7	27.0	8 000	5 000	3.10
		3.7402	6.6929	1.2598	14 320	6 070			6.84
1220	1220K	100	180	34	68.9	30.0	7 500	4 800	3.70
		3.9370	7.0866	1.3386	15 489	6 744			8.16
1222	1222K	110	200	38	88.4	39.0	6 700	4 300	5.15
		4.3307	7.8740	1.4961	19 872	8 767			11.36

Self-Aligning Ball Bearings
Series 13

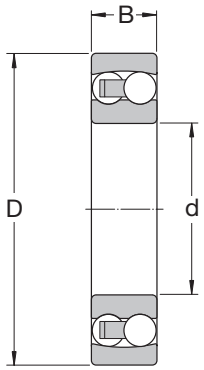

Bearing Designation		Dimensions			Basic Load Ratings		Speed Limit		Mass
					Dynamic	Static			
Cylindrical Bore	Tapered Bore	d	D	B	C	C_0	Ref.	Limit	
		mm/in			kN/lb		r/min		kg/lb
1305 E	1305 EK	25	62	17	19.0	5.4	22 000	15 000	0.26
		0.9843	2.4409	0.6693	4 271	1 214			0.57
1306 E	1306 EK	30	72	19	22.5	6.8	19 000	13 000	0.39
		1.1811	2.8346	0.7480	5 058	1 529			0.86
1307 E	1307 EK	35	80	21	26.5	8.5	16 000	11 000	0.51
		1.3780	3.1496	0.8268	5 957	1 911			1.12
1308 E	1308 EK	40	90	23	33.8	11.2	14 000	9 500	0.72
		1.5748	3.5433	0.9055	7 598	2 518			1.59
1309 E	1309 EK	45	100	25	39.0	13.4	12 000	8 500	0.96
		1.7717	3.9370	0.9843	8 767	3 012			2.12
1310 E	1310 EK	50	110	27	43.6	14.0	12 000	8 000	1.20
		1.9685	4.3307	1.0630	9 801	3 147			2.65
1311 E	1311 EK	55	120	29	50.7	18.0	11 000	7 500	1.60
		2.1654	4.7244	1.1417	11 397	4 046			3.53
1312 E	1312 EK	60	130	31	58.5	22.0	9 000	6 300	1.95
		2.3622	5.1181	1.2205	13 151	4 946			4.30
1313 E	1313 EK	65	140	33	65.0	25.5	8 500	6 000	2.45
		2.5591	5.5118	1.2992	14 612	5 732			5.40
1314	-	70	150	35	74.1	27.5	8 500	6 000	3.00
		2.7559	5.9055	1.3780	16 658	6 182			6.62
1315	1315 EK	75	160	37	79.3	30.0	8 000	5 600	3.55
		2.9528	6.2992	1.4567	17 827	6 744			7.83
1316	1316 K	80	170	39	88.4	33.5	7 500	5 300	4.20
		3.1496	6.6929	1.5354	19 872	7 531			9.26
1317	1317 K	85	180	41	97.5	38.0	7 000	4 800	5.00
		3.3465	7.0866	1.6142	21 918	8 542			11.03
1318	1318 K	90	190	43	117.0	44.0	6 700	4 500	5.80
		3.5433	7.4803	1.6929	26 302	9 891			12.79
1320	1320 K	100	215	47	143.0	57.0	6 000	4 000	8.30
		3.9370	8.4646	1.8504	32 146	12 814			18.30
1322	1322 K	110	240	50	163.0	72.0	5 300	3 600	12.0
		4.3307	9.4488	1.9685	36 642	16 186			26.46

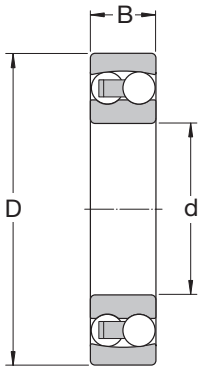

Bearing Designation		Dimensions			Basic Load Ratings		Speed Limit		Mass
					Dynamic	Static			
Cylindrical Bore	Tapered Bore	d	D	B	C	C_0	Ref.	Limit	
		mm/in			kN/lb		r/min		kg/lb
2205 E	2205 EK	25	52	18	16.8	4.4	26 000	18 000	0.16
		0.9843	2.0472	0.7087	3 777	989			0.35
2206 E	2206 EK	30	62	20	23.8	6.7	22 000	15 000	0.26
		1.1811	2.4409	0.7874	5 350	1 506			0.57
2207 E	2207 EK	35	72	23	30.7	8.8	18 000	12 000	0.40
		1.3780	2.8346	0.9055	6 901	1 978			0.88
2208 E	2208 EK	40	80	23	31.9	10.0	16 000	11 000	0.51
		1.5748	3.1496	0.9055	7 171	2 248			1.12
2209 E	2209 EK	45	85	23	32.5	10.6	15 000	10 000	0.55
		1.7717	3.3465	0.9055	7 306	2 383			1.21
2210 E	2210 EK	50	90	23	33.8	11.2	14 000	9 500	0.60
		1.9685	3.5433	0.9055	7 598	2 518			1.32
2211 E	2211 EK	55	100	25	39.0	13.4	12 000	8 500	0.81
		2.1654	3.9370	0.9843	8 767	3 012			1.79
2212 E	2212 EK	60	110	28	48.8	17.0	11 000	8 000	1.10
		2.3622	4.3307	1.1024	10 970	3 822			2.43
2213 E	2213 EK	65	120	31	57.2	20.0	10 000	7 000	1.45
		2.5591	4.7244	1.2205	12 859	4 496			3.20
2215 E	2215 EK	75	130	31	58.5	22.0	9 000	6 300	1.60
		2.9528	5.1181	1.2205	13 151	4.946			3.53
2216 E	2216 EK	80	140	33	65.0	25.5	8 500	6 000	2.00
		3.1496	5.5118	1.2992	14 612	5 732			4.41
2217	2217 K	85	150	36	58.5	23.6	8 000	5 600	2.50
		3.3465	5.9055	1.4173	13 151	5 305			5.51
2218	2218 K	90	160	40	70.2	28.5	7 500	5 300	3.40
		3.5433	6.2992	1.5748	15 782	6 407			7.50
2219	2219 K	95	170	43	83.2	34.5	7 000	5 000	4.10
		3.7402	6.6929	1.6929	18 703	7 756			9.04
2220	2220 K	100	180	46	97.5	40.5	6 700	4 800	5.00
		3.9370	7.0866	1.8110	21 918	9 104			11.03
2222	2222 K	110	200	53	124.0	52.0	6 000	4 300	7.10
		4.3307	7.8740	2.0866	27 875	11 690			15.66

Self-Aligning Ball Bearings
Series 23

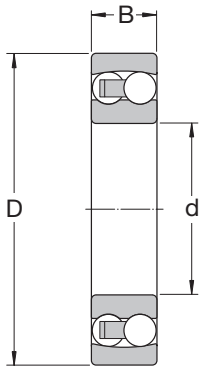

Bearing Designation		Dimensions			Basic Load Ratings		Speed Limit		Mass
					Dynamic	Static			
Cylindrical Bore	Tapered Bore	d	D	B	C	C_0	Ref.	Limit	
		mm/in			kN/lb		r/min		kg/lb
2306	2306 K	30	72	27	31,2	8.80	18 000	13 000	0.50
		1.1811	2.8346	1.0630	7 014	1 978			1.10
2307 E	2307 EK	35	80	31	39.7	11.20	16 000	12 000	0.68
		1.3780	3.1496	1.2205	8 925	2 518			1.50
2308 E	2308 EK	40	90	33	54.0	16.0	14 000	10 000	0.93
		1.5748	3.5433	1.2992	12 139	3 597			2.05
2309 E	2309 EK	45	100	36	64.0	19.3	13 000	9 000	1.25
		1.7717	3.9370	1.4173	14 387	4 339			2.76
2310	2310 K	50	110	40	63.7	20.0	14 000	9 500	1.65
		1.9685	4.3307	1.5748	14 320	4 496			3.64
2311	2311 K	55	120	43	76.1	24.0	11 000	7 500	2.10
		2.1654	4.7244	1.6929	17 107	5 395			4.63
2312	2312 K	60	130	46	87.1	28.5	9 500	7 000	2.60
		2.3622	5.1181	1.8110	19 580	6 407			5.73
2313	2313 K	65	140	48	95.6	32.5	9 000	6 300	3.25
		2.5591	5.5118	1.8898	21 491	7 306			7.17
2315	2315 K	75	160	55	124.0	43.0	7 500	5 600	4.70
		2.9528	6.2992	2.1654	27 875	9 666			10.36
2316	2316 K	80	170	58	135.0	49.0	7 000	5 300	6.10
		3.1496	6.6929	2.2835	30 348	11 015			13.45
2317	2317 K	85	180	60	140.0	51.0	6 700	4 800	7.05
		3.3465	7.0866	2.3622	31 472	11 465			15.55
2320	2320 K	100	215	73	190.0	80.0	5 600	4 000	12.5
		3.9370	8.4646	2.8740	42 712	17 984			27.56

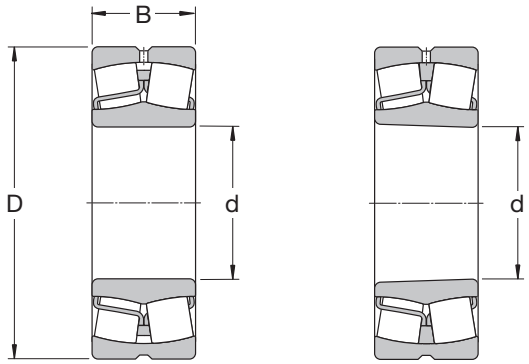

Bearing Designation		Dimensions			W33 Groove Width	Basic Load Ratings		Speed Limit		Mass
Cylindical Bore	Tapered Bore	d	D	B	b	Dynamic C	Static C_0	Ref.	Limit	
		mm/in				kN/lb		r/min		kg/lb
21308 E	21308 EK	40	90	23	5.5	104	108	7 000	9 500	0.75
		1.5748	3.5433	0.9055	0.22	23 379	24 278			1.65
21309 E	21309 EK	45	100	25	5.5	125	127	6 300	8 500	0.99
		1.7717	3.9370	0.9843	0.22	28 100	28 550			2.18
21310 E	21310 EK	50	110	27	5.5	156	166	5 600	7 500	1.35
		1.9685	4.3307	1.0630	0.22	35 069	37 317			2.98
21311 E	21311 EK	55	120	29	5.5	156	166	5 600	7 500	1.70
		2.1654	4.7244	1.1417	0.22	35 069	37 317			3.75
21312 E	21312 EK	60	130	31	5.5	212	240	4 800	6 300	2.10
		2.3622	5.1181	1.2205	0.22	47 658	53 952			4.63
21313 E	21313 EK	65	140	33	5.5	236	270	4 300	6 000	2.55
		2.5591	5.5118	1.2992	0.22	53 053	60 696			5.62
21315 E	21315 EK	75	160	37	5.5	285	325	4 000	5 600	3.75
		2.9528	6.2992	1.4567	0.22	64 068	73 060			8.27
21316 E	21316 EK	80	170	39	5.5	325	375	3 800	5 300	4.45
		3.1496	6.6929	1.5354	0.22	73 060	84 300			9.81
21317 E	21317 EK	85	180	41	5.5	325	375	3 800	5 300	5.20
		3.3465	7.0866	1.6142	0.22	73 060	84 300			11.47
21320 E	21320 EK	100	215	47	8.3	425	490	3 400	4 500	8.60
		3.9370	8.4646	1.8504	0.33	95 540	110 152			18.96

Spherical Roller Bearings
Series 222

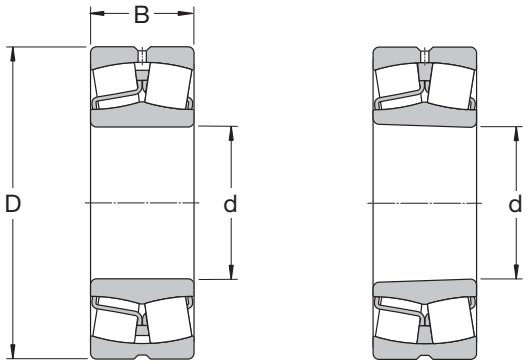

Bearing Designation		Dimensions			W33 Groove Width	Basic Load Ratings		Speed Limit		Mass
Cylindical Bore	Tapered Bore	d	D	B	b	Dynamic C	Static C_0	Ref.	Limit	
		mm/in				kN/lb		r/min		kg/lb
22207 E	22207 EK	35	72	23	3.70	86.5	85	9 000	12 000	0.45
		1.3780	2.8346	0.91	0.15	19 445	19 108			0.99
22208 E	22208 EK	40	80	23	5.50	96.5	90	8 000	11 000	0.53
		1.5748	3.1496	0.9055	0.22	21 693	20 232			1.17
22209 E	22209 EK	45	85	23	5.50	102	98	7 500	10 000	0.58
		1.7717	3.3465	0.9055	0.22	22 930	22 030			1.28
22210 E	22210 EK	50	90	23	5.50	104	108	7 000	9 500	0.63
		1.9685	3.5433	0.9055	0.22	23 379	24 278			1.39
22211 E	22211 EK	55	100	25	5.50	125	127	6 300	8 500	0.84
		2.1654	3.9370	0.9843	0.22	28 100	28 550			1.85
22212 E	22212 EK	60	110	28	5.50	156	166	5 600	7 500	1.15
		2.3622	4.3307	1.1024	0.22	35 069	37 317			2.54
22213 E	22213 EK	65	120	31	5.50	193	216	5 000	7 000	1.55
		2.5591	4.7244	1.2205	0.22	43 386	48 557			3.42
22215 E	22215 EK	75	130	31	5.50	212	240	4 800	6 300	1.70
		2.9528	5.1181	1.2205	0.22	47 658	53 952			3.75
22216 E	22216 EK	80	140	33	5.50	236	270	4 300	6 000	2.10
		3.1496	5.5118	1.2992	0.22	53 053	60 696			4.63
22217 E	22217 EK	85	150	36	5.50	285	325	4 000	5 600	2.65
		3.3465	5.9055	1.4173	0.22	64 068	73 060			5.84
22218 E	22218 EK	90	160	40	5.50	325	375	3 800	5 300	3.40
		3.5433	6.2992	1.5748	0.22	73 060	84 300			7.50
22220 E	22220 EK	100	180	46	8.30	425	490	3 400	4 500	4.90
		3.9370	7.0866	1.8110	0.33	95 540	110 152			10.80
22222 E	22222 EK	110	200	53	8.30	560	640	3 000	4 000	7.00
		4.3307	7.8740	2.0866	0.33	125 888	143 872			15.44
22224 E	22224 EK	120	215	58	11.1	630	765	2 800	3 800	8.70
		4.7244	8.4646	2.2835	0.44	141 624	171 972			19.18
22226 E	22226 EK	130	230	64	11.1	735	930	2 600	3 600	11.00
		5.1181	9.0551	2.5197	0.44	165 228	209 064			24.26
22228CC/W33	22228CCK/W33	140	250	68	11.1	710	900	2 400	3200	14.00
		5.5118	9.8425	2.6772	0.44	159 608	202 320			30.87

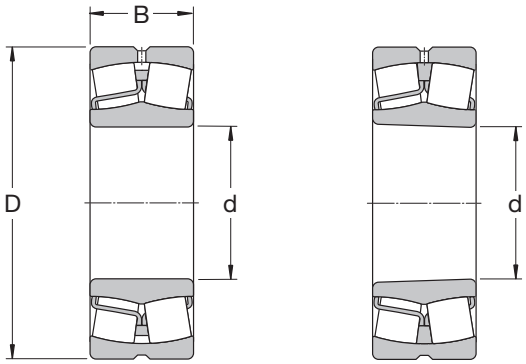

Bearing Designation		Dimensions			W33 Groove Width	Basic Load Ratings		Speed Limit		Mass
Cylindical Bore	Tapered Bore	d	D	B	b	Dynamic C	Static C_0	Ref.	Limit	
		mm/in				kN/lb		r/min		kg/lb
22230CC/W33	22230CCK/W33	150	270	73	13.9	850	1 080	2 200	3 000	18.0
		5.9055	10.6299	2.87	0.55	191 080	242 784			39.7
22232CC/W33	22232CCK/W33	160	290	80	13.9	1 000	1 290	2 000	2 800	22.5
		6.2992	11.4173	3.1496	0.55	224 800	289 992			49.6
22234CC/W33	22234CCK/W33	170	310	86	16.7	1 120	1 460	1 900	2 600	28.5
		6.6929	12.2047	3.3858	0.66	251 776	328 208			62.8
22236CC/W33	22236CCK/W33	180	320	86	16.7	1 180	1 560	1 800	2 600	29.5
		7.0866	12.5984	3.3858	0.66	265 264	350 688			65.0
22238CC/W33	22238CCK/W33	190	340	92	16.7	1 270	1 700	1 700	2 400	36.5
		7.4803	13.3858	3.6220	0.66	285 496	382 160			80.5
22240CC/W33	22240CCK/W33	200	360	98	16.7	1 460	1 930	1 600	2 200	43.5
		7.8740	14.1732	3.8583	0.66	328 208	433 864			95.9
22244CC/W33	22244CCK/W33	220	400	108	16.7	1 760	2 360	1 500	2 000	60.5
		8.6614	15.7480	4.2520	0.66	395 648	530 528			133.4

Spherical Roller Bearings
Series 223

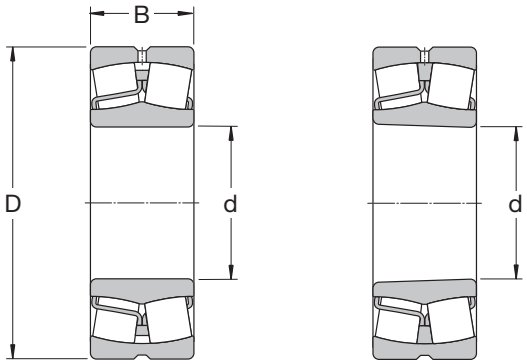

Bearing Designation		Dimensions			W33 Groove Width	Basic Load Ratings		Speed Limit		Mass
Cylindical Bore	Tapered Bore	d	D	B	b	Dynamic C	Static C_0	Ref.	Limit	
		mm/in				kN/lb		r/min		kg/lb
22308 E	22308 EK	40	90	33	5.5	150	140	6 000	8 000	1.05
		1.5748	3.5433	1.2992	0.22	33 720	31 472			2.32
22309 E	22309 EK	45	100	36	5.5	183	183	5 300	7 000	1.40
		1.7717	3.937	1.4173	0.22	41 138	41 138			3.09
22310 E	22310 EK	50	110	40	5.5	220	224	4 800	6 300	1.90
		1.9685	4.3307	1.5748	0.22	49 456	50 355			4.19
22311 E	22311 EK	55	120	43	5.5	270	280	4 300	5 600	2.45
		2.1654	4.7244	1.6929	0.22	60 696	62 944			5.40
22312 E	22312 EK	60	130	46	8.3	310	335	4 000	5 300	3.10
		2.3622	5.1181	1.811	0.33	69 688	75 308			6.84
22313 E	22313 EK	65	140	48	8.3	340	360	3 800	5 000	3.75
		2.5591	5.5118	1.8898	0.33	76 432	80 928			8.27
22314 E	22314 EK	70	150	51	8.3	400	430	3 400	4 500	4.55
		2.7559	5.9055	2.0079	0.33	89 920	96 664			10.03
22315 E	22315 EK	75	160	55	8.3	440	475	3 200	4 300	5.55
		2.9528	6.2992	2.1654	0.33	98 912	106 780			12.24
22316 E	22316 EK	80	170	58	8.3	490	540	3 000	4 000	6.60
		3.1496	6.6929	2.2835	0.33	110 152	121 392			14.55
22317 E	22317 EK	85	180	60	8.3	550	620	2 800	3 800	7.65
		3.3465	7.0866	2.3622	0.33	123 640	139 376			16.87
22318 E	22318 EK	90	190	64	11.1	610	695	2 600	3 600	9.05
		3.5433	7.4803	2.5197	0.44	137 128	156 236			19.96
22319 E	22319 EK	95	200	67	11.1	670	765	2 600	3 400	10.50
		3.7402	7.874	2.6378	0.44	150 616	171 972			23.15
22320 E	22320 EK	100	215	73	11.1	815	950	2 400	3 000	13.50
		3.937	8.4646	2.874	0.44	183 212	213 560			29.77
22322 E	22322 EK	110	240	80	13.9	950	1 120	2 000	2 800	18.40
		4.3307	9.4488	3.1496	0.55	213 560	251 776			40.57

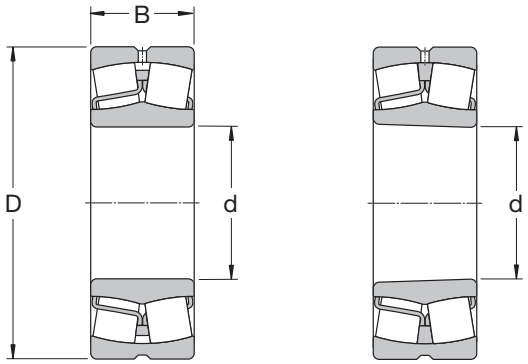

Bearing Designation		Dimensions			W33 Groove Width	Basic Load Ratings		Speed Limit		Mass
Cylindical Bore	Tapered Bore	d	D	B	b	Dynamic C	Static C_0	Ref.	Limit	
		mm/in				kN/lb		r/min		kg/lb
22324CC/W33	22324CCK/W33	120	260	86	13,9	965	1 120	2 000	2 600	23.00
		4.7244	10.236	3.3858	0.55	216 932	251 776			50.72
22326CC/W33	22326CCK/W33	130	280	93	16.7	1 120	1 320	1 800	2 400	29.00
		5.1181	11.024	3.6614	0.66	251 776	296 736			63.95
22328CC/W33	22328CCK/W33	140	300	102	16.7	1 290	1 560	1 700	2 200	36.50
		5.5118	11.811	4.0157	0.66	289 992	350 688			80.50
22330CC/W33	22330CCK/W33	150	320	108	16.7	1 460	1 760	1 600	2 000	43.50
		5.9055	12.5984	4.252	0.66	328 208	395 648			95.90
22332CC/W33	22332CCK/W33	160	340	114	16.7	1 600	1 960	1 500	1 900	52.00
		6.2992	13.3858	4.4882	0.66	359 680	440 608			115.00
22334CC/W33	22334CCK/W33	170	360	120	16.7	1 760	2 160	1 400	1 800	61.00
		6.6929	14.1732	4.7244	0.66	395 648	485 568			135.00
22336CC/W33	22336CCK/W33	180	380	126	22.3	2 000	2 450	1 300	1 700	71.50
		7.0866	14.9606	4.9606	0.88	449 600	550 760			158.00
22338CC/W33	22338CCK/W33	190	400	132	22.3	2 120	2 650	1 200	1 600	82.50
		7.4803	15.748	5.1969	0.88	476 576	595 720			182.00
22340CC/W33	22340CCK/W33	200	420	138	22.3	2 320	2 900	1 200	1 500	95.00
		7.874	16.5354	5.4331	0.88	521 536	651 920			210.00

Spherical Roller Bearings
Series 230

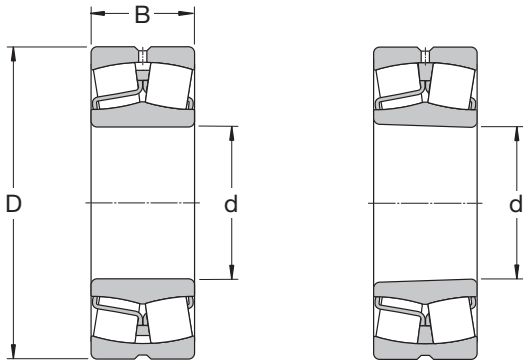

Bearing Designation		Dimensions			W33 Groove Width	Basic Load Ratings		Speed Limit		Mass
Cylindical Bore	Tapered Bore	d	D	B	b	Dynamic C	Static C_0	Ref.	Limit	
		mm/in				kN/lb		r/min		kg/lb
23024CC/W33	23024CCK/W33	120	180	46	5.50	355	510	3 200	4 000	4.20
		4.7244	7.0866	1.8110	0.22	79 804	114 648			9.30
23026CC/W33	23026CCK/W33	130	200	52	8.30	430	610	2 800	3 600	6.00
		5.1181	7.8740	2.0472	0.33	96 664	137 128			13.20
23028CC/W33	23028CCK/W33	140	210	53	8.30	465	680	2 600	3 400	6.55
		5.5118	8.2677	2.0866	0.33	104 532	152 864			14.40
23030CC/W33	23030CCK/W33	150	225	56	8.30	510	750	2 400	3 200	7.95
		5.9055	8.8583	2.2047	0.33	114 648	168 600			17.50
23032CC/W33	23032CCK/W33	160	240	60	11.1	585	880	2 400	3 000	9.70
		6.2992	9.4488	2.3622	0.44	131 508	197 824			21.40
23034CC/W33	23034CCK/W33	170	260	67	11.1	710	1 060	2 200	2 800	13.00
		6.6929	10.2362	2.6378	0.44	159 608	238 288			28.70
23036CC/W33	23036CCK/W33	180	280	74	13.9	830	1 250	2 000	2 600	17.00
		7.0866	11.0236	2.9134	0.55	186 584	281 000			37.50
23038CC/W33	23038CCK/W33	190	290	75	13.9	865	1340	1 900	2 400	18.00
		7.4803	11.4173	2.9528	0.55	194 452	301 232			39.70
23040CC/W33	23040CCK/W33	200	310	82	13.9	1 000	1 530	1 800	2 200	23.30
		7.8740	12.2047	3.2283	0.55	224 800	343 944			51.40
23044CC/W33	23044CCK/W33	220	340	90	13.9	1 220	1 860	1 600	2 000	30.50
		8.6614	13.3858	3.5433	0.55	274 256	418 128			67.30
23048CC/W33	23048CCK/W33	240	360	92	13.9	1 290	2 080	1 500	1 900	33.50
		9.4488	14.1732	3.6220	0.55	289 992	467 584			73.90
23052CC/W33	23052CCK/W33	260	400	104	16.7	1 600	2 550	1 300	1 700	48.50
		10.2362	15.7480	4.0945	0.66	359 680	573 240			106.90
23056CC/W33	23056CCK/W33	280	420	106	16.7	1 730	2 850	1 300	1 600	52.50
		11.0236	16.5354	4.1732	0.66	388 904	640 680			115.80
23060CC/W33	23060CCK/W33	300	460	118	16.7	2 120	3 450	1 200	1 500	71.50
		11.8110	18.1102	4.6457	0.66	476 576	775 560			157.70
23064CC/W33	23064CCK/W33	320	480	121	16.7	2 240	3 800	1 100	1 400	78.00
		12.5984	18.8976	4.7638	0.66	503 552	854 240			172.00
23068CC/W33	23068CCK/W33	340	520	133	22.3	2 700	4 550	1 000	1 300	105.00
		13.3858	20.4724	5.2362	0.88	606 960	1 022 840			231.50

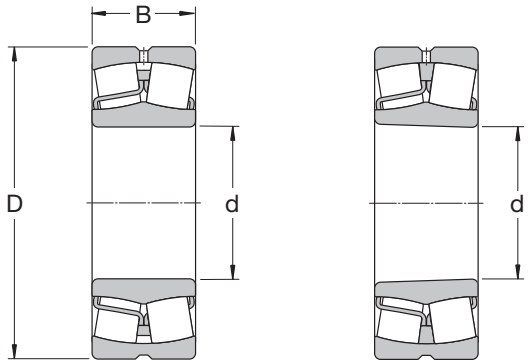

Bearing Designation		Dimensions			W33 Groove Width	Basic Load Ratings		Speed Limit		Mass
Cylindical Bore	Tapered Bore	d	D	B	b	Dynamic C	Static C_0	Ref.	Limit	
		mm/in				kN/lb		r/min		kg/lb
23072CC/W33	23072CCK/W33	360	540	134	22.3	2 750	4 800	950	1 200	110
		14.1732	21.2598	5.2756	0.88	618 200	1 079 040			243
23076CC/W33	23076CCK/W33	380	560	135	22.3	2 900	5 000	900	1 200	115
		14.9606	22.0472	5.3150	0.88	651 920	1 124 000			254
23080CC/W33	23080CCK/W33	400	600	148	22.3	3 250	5 700	850	1 100	150
		15.7480	23.6220	5.8268	0.88	730 600	1 281 360			331
23084CA/W33	23084CAK/W33	420	620	150	22.3	3 400	6 000	600	1 100	155
		16.5354	24.4094	5.9055	0.88	764 320	1 348 800			342
23088CA/W33	23088CAK/W33	440	650	157	22.3	3 650	6 550	560	1 000	180
		17.3228	25.5906	6.1811	0.88	820 520	1 472 440			397

Spherical Roller Bearings
Series 231

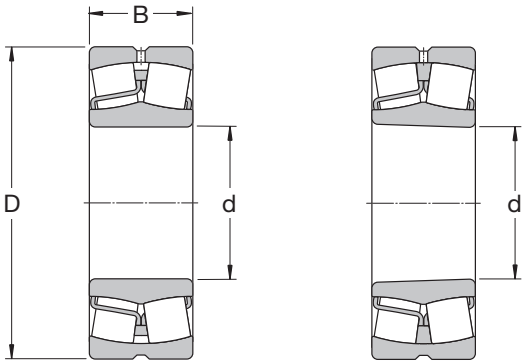

Bearing Designation		Dimensions			W33 Groove Width	Basic Load Ratings		Speed Limit		Mass
Cylindical Bore	Tapered Bore	d	D	B	b	Dynamic C	Static C_0	Ref.	Limit	
		mm/in				kN/lb		r/min		kg/lb
23134CC/W33	23134CCK/W33	170	280	88	13.9	1 040	1 500	1 800	2 400	22.00
		6.6929	11.0236	3.4646	0.50	233 792	337 200			48.50
23136CC/W33	23136CCK/W33	180	300	96	13.9	1 200	1 760	1 700	2 200	28.00
		7.0866	11.8110	3.7795	0.50	269 760	395 648			61.70
23138CC/W33	23138CCK/W33	190	320	104	13.9	1 370	2 080	1 500	2 000	35.00
		7.4803	12.5984	4.0945	0.50	307 976	467 584			77.20
23140CC/W33	23140CCK/W33	200	340	112	16.7	1 600	2 360	1 500	1 900	43.00
		7.8740	13.3858	4.4094	0.70	359 680	530 528			94.80
23144CC/W33	23144CCK/W33	220	370	120	16.7	1 800	2 750	1 300	1 700	53.50
		8.6614	14.5669	4.7244	0.70	404 640	618 200			118.50
23148CC/W33	23148CCK/W33	240	400	128	16.7	2 080	3 200	1 200	1 600	66.50
		9.4488	15.7480	5.0394	0.70	467 584	719 360			146.60
23152CC/W33	23152CCK/W33	260	440	144	16.7	2 550	3 900	1 100	1 400	90.50
		10.2362	17.3228	5.6693	0.70	573 240	876 720			199.60
23156CC/W33	23156CCK/W33	280	460	146	16.7	2 650	4 250	1 000	1 300	97.00
		11.0236	18.1102	5.7480	0.70	595 720	955 400			214.00
23160CC/W33	23160CCK/W33	300	500	160	16.7	3 200	5 100	950	1 200	125.00
		11.8110	19.6850	6.2992	0.70	719 360	1 146 480			275.60
23164CC/W33	23164CCK/W33	320	540	176	22.3	3 750	6 000	850	1 100	165.00
		12.5984	21.2598	6.9291	0.90	843 000	1 348 800			363.80
23168CC/W33	23168CCK/W33	340	580	190	22.3	4 250	6 800	800	1 000	210.00
		13.3858	22.8346	7.4803	0.90	955 400	1 528 640			463.10
23172CC/W33	23172CCK/W33	360	600	192	22.3	4 300	6 950	750	1 000	220.00
		14.1732	23.6220	7.5591	0.90	966 640	1 562 360			485.10
23176CA/W33	23176CAK/W33	380	620	194	22,3	4 400	7 100	560	1 000	230.00
		14.9606	24.4094	7.6378	0.90	989 120	1 596 080			507.20
23180CA/W33	23180CAK/W33	400	650	200	22.3	4 650	7 650	530	950	265.00
		15.7480	25.5906	7.8740	0.90	1 045 320	1 719 720			584.30
23184CJ/W33	23184CKJ/W33	420	700	224	22.3	5 600	9 300	480	900	350.00
		16.5354	27.5591	8.8189	0.90	1 258 880	2 090 640			771.80
23188CA/W33	23188CAK/W33	440	720	226	22.3	6 000	10 000	450	850	360.00
		17.3228	28.3465	8.8976	0.90	1 348 800	2 248 000			793.80

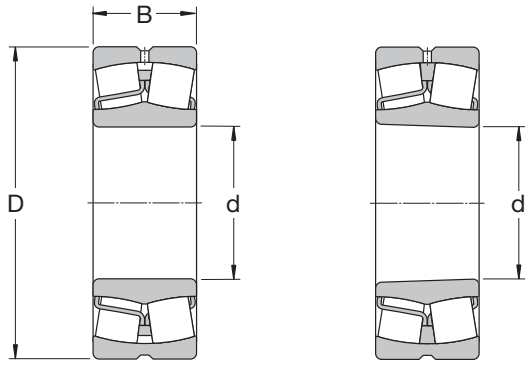

Bearing Designation		Dimensions			W33 Groove Width	Basic Load Ratings		Speed Limit		Mass
Cylindical Bore	Tapered Bore	d	D	B	b	Dynamic C	Static C_0	Ref.	Limit	
		mm/in				kN/lb		r/min		kg/lb
23218CC/W33	23218CCK/W33	90	160	52.4	5.5	355	440	2 800	3 800	4.65
		0.5433	6.2992	2.0630	0.2	79 804	98 912			10.30
23220CC/W33	23220CCK/W33	100	180	60.3	8.3	475	600	2 400	3 400	6.85
		3.9370	7.0866	2.3740	0.3	106 780	134 880			15.10
23222CC/W33	23222CCK/W33	110	200	69.8	8.3	600	765	2 200	3 200	9.85
		4.3307	7.8740	2.7480	0.3	134 880	171 972			21.70
23224CC/W33	23224CCK/W33	120	215	76	8.3	695	930	2 000	2 800	12.00
		4.7244	8.4646	2.9921	0.3	156 236	209 064			26.50
23226CC/W33	23226CCK/W33	130	230	80	8.3	780	1 060	1 900	2 600	14.50
		5.1181	9.0551	3.1496	0.3	175 344	238 288			32.00
23228CC/W33	23228CCK/W33	140	250	88	11.1	915	1 250	1 700	2 400	19.00
		5.5118	9.8425	3.4646	0.4	205 692	281 000			41.90
23230CC/W33	23230CCK/W33	150	270	96	11.1	1 080	1 460	1 600	2 200	24.50
		5.9055	10.6299	3.7795	0.4	242 784	328 208			54.00
23232CC/W33	23232CCK/W33	160	290	104	13.9	1 220	1 660	1 500	2 200	31.00
		6.2992	11.4173	4.0945	0.5	274 256	373 168			68.40
23234CC/W33	23234CCK/W33	170	310	110	13.9	1 400	1 930	1 400	2 000	37.50
		6.6929	12.2047	4.3307	0.5	314 720	433 864			82.70
23236CC/W33	23236CCK/W33	180	320	112	13.9	1 500	2 120	1 300	1 900	39.50
		7.0866	12.5984	4.4094	0.5	337 200	476 576			87.10
23238CC/W33	23238CCK/W33	190	340	120	16.7	1 660	2 400	1 300	1 800	48.00
		7.4803	13.3858	4.7244	0.7	373 168	539 520			105.80
23240CC/W33	23240CCK/W33	200	360	128	16.7	1 860	2 700	1 200	1 700	58.00
		7.8740	14.1732	5.0394	0.7	418 128	606 960			127.90
23244CC/W33	23244CCK/W33	220	400	144	16.7	2 360	3 450	1 100	1 500	81.50
		8.6614	15.7480	5.6693	0.7	530 528	775 560			179.70
23248CC/W33	23248CCK/W33	240	440	160	22.3	2 900	4 300	950	1 300	110.00
		9.4488	17.3228	6.2992	0.9	651 920	966 640			242.60
23252CAC/W33	23252CACK/W33	260	480	174	22.3	3 250	4 750	850	1 200	140.00
		10.2362	18.8976	6.8504	0.9	730 600	1 067 800			308.70
23256CAC/W33	23256CACK/W33	280	500	176	22.3	3 250	4 900	800	1 100	150.00
		11.0236	19.6850	6.92911	0.9	730 600	1 101 520			330.80

Spherical Roller Bearings
Series 232

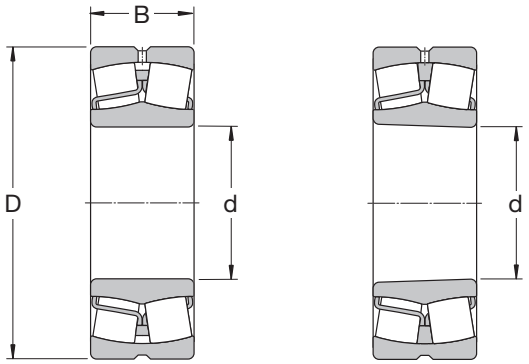

Bearing Designation		Dimensions			W33 Groove Width	Basic Load Ratings		Speed Limit		Mass
Cylindical Bore	Tapered Bore	d	D	B	b	Dynamic C	Static C_0	Ref.	Limit	
		mm/in				kN/lb		r/min		kg/lb
23260CAC/W33	23260CACK/W33	300	540	192	22.3	3 900	5 850	750	1 000	190
		11.8110	21.2598	7.5591	0.9	876 720	1 315 080			419
23264CAC/W33	23264CACK/W33	320	580	208	22.3	4 400	6 700	700	950	240
		12.5984	22.8346	8.1890	0.9	989 120	1 506 160			529
23268CA/W33	23268CAK/W33	340	620	224	22.3	5 100	7 800	560	800	295
		13.3858	24.4094	8.8189	0.9	1 146 480	1 753 440			650
23272CA/W33	23272CA/W33	360	650	232	22.3	5 400	8 300	530	750	335
		14.1732	25.5906	9.1339	0.9	1 213 920	1 865 840			739
23276CA/W33	23276CA/W33	380	680	240	22.3	5 850	9 150	500	750	375
		14.9606	26.7717	9.4488	0.9	1 315 080	2 056 920			827
23280CA/W33	23280CA/W33	400	720	256	22.3	6 550	10 400	480	670	450
		15.7480	28.3465	10.0787	0.9	1 472 440	2 337 920			992

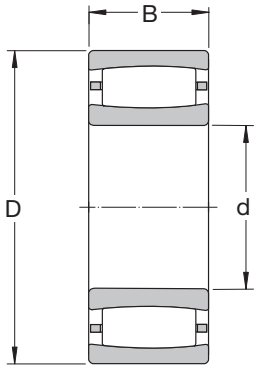

Bearing Designation		Dimensions			Basic Load Ratings		Speed Limit		Mass
					Dynamic	Static			
Cylindrical Bore	Tapered Bore	d	D	B	C	C_0	Ref.	Limit	
		mm/in			kN/lb		r/min		kg/lb
C2205/TN9	C2205K/TN9	25	52	18	44	40	13 000	18 000	0.17
		0.9843	2.072	0.7086	9 891	8 992			0.37
C2206/TN9	C2206K/TN9	30	62	20	69.5	62	11 000	15 000	0.27
		1.1811	2.4409	0.7874	15 624	13 938			0.60
C2207/TN9	C2207K/TN9	35	72	23	83	80	9 500	13 000	0.43
		1.3780	2.8346	0.9055	18 658	17 984			0.95
C2208/TN9	C2208K/TN9	40	80	23	90	86,5	8 000	11 000	0.50
		1.5748	3.1496	0.9055	20 232	19 445			1.10
C2209/TN9	C2209K/TN9	45	85	23	93	93	8 000	11 000	0.55
		1.7717	3.3465	0.9055	20 906	20 906			1.21
C2210/TN9	C2210K/TN9	50	90	23	98	100	7 000	9 500	0.59
		1.9685	3.5433	0.9055	22 030	22 480			1.30
C2211/TN9	C2211K/TN9	55	100	25	116	114	6 700	9 000	0.79
		2.1654	3.9370	0.9843	26 077	25 627			1.74
C2212/TN9	C2212K/TN9	60	110	28	143	156	5 600	7 500	1.10
		2.3622	4.3307	1.1024	32 146	35 069			2.43
C2213/TN9	C2213K/TN9	65	120	31	180	180	5 300	7 500	1.40
		2.5591	4.7244	1.2205	40 464	40 464			3.09
C2214/TN9	C2214K/TN9	70	125	31	186	196	5 000	7 000	1.45
		2.7559	4.9213	1.2205	41 813	44 061			3.20
C2314	C2314K	70	150	51	405	430	3 800	5 000	4.25
		2.7559	5.9055	2.0079	91 044	96 664			9.37
C2215	C2215K	75	130	31	196	208	4 800	6 700	1.60
		2.9528	5.1181	1.2205	44 061	46 758			3.53
C2315	C2315K	75	160	55	425	465	3 600	4 800	5.20
		2.9528	6.2992	2.1654	95 540	104 532			11.47
C2216	C2216K	80	140	33	220	250	4 500	6 000	2.00
		3.1496	5.5118	1.2992	49 456	56 200			4.41
C2316	C2316K	80	170	58	510	550	3 400	4 500	6.20
		3.1496	6.6929	2.2835	114 648	123 640			13.67

Series: CARB®

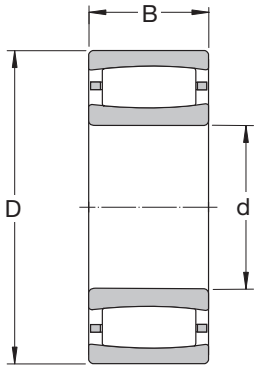

Bearing Designation		Dimensions			Basic Load Ratings		Speed Limit		Mass
					Dynamic	Static			
Cylindrical Bore	Tapered Bore	d	D	B	C	C_0	Ref.	Limit	
		mm/in			kN/lb		r/min		kg/lb
C2217	C2217K	85	150	36	275	320	4 300	5 600	2.60
		3.3465	5.9055	1.4173	61 820	71 936			5.70
C2317	C2317K	85	180	60	540	600	3 200	4 300	7.30
		3.3465	7.0866	2.3622	121 392	134 880			16.1
C2218	C2218K	90	160	40	325	380	3 800	5 300	3.30
		3.5433	6.2992	1.5748	73 060	85 424			7.30
C2220	C2220K	100	180	46	415	465	3 600	4 800	4.90
		3.9370	7.0866	1.8110	93 292	104 532			10.70
C2320	C2320K	100	215	73	800	880	2 600	3 600	12.50
		3.9370	8.4646	2.8740	179 840	197 824			27.60
C2222	C2222K	110	200	53	530	620	3 200	4 300	6.90
		4.3307	7.8740	2.0866	119 144	139 376			15.20
C3224	C3224K	120	215	76	750	980	2 400	3 200	11.50
		4.7244	8.4646	2.9921	168 600	220 304			25.40
C2226	C2226K	130	230	64	735	930	2 800	3 800	11.00
		5.1181	9.0551	2.5197	165 228	209 064			24.30
C2228	C2228K	140	250	68	830	1 060	2 400	3 400	13.80
		5.5118	9.8425	2.6772	186 584	238 288			30.40
C2230	C2230K	150	270	73	980	1 220	2 400	3 200	17.50
		5.9055	10.6299	2.8740	220 304	274 256			38.60
C3232	C3232K	160	290	104	1 370	1 830	1 700	2 400	28.50
		6.2992	11.4173	4.0945	307 976	411 384			62.80

Decimals of a millimeter into decimals of an inch

milli-meter	0	0.01	0.02	0.03	0.04	0.05	0.06	0.07	0.08	0.09	Milli-meter
	in.	in.	in.	in.	in.	in.	in.	in.	in.	in.	
0	.....	0.00039	0.00079	0.00118	0.00157	0.00197	0.00236	0.00276	0.00315	0.00354	**0**
0.001	0.00004	0.00043	0.00083	0.00122	0.00161	0.00201	0.00240	0.00280	0.00319	0.00358	**0.001**
0.002	0.00008	0.00047	0.00087	0.00126	0.00165	0.00205	0.00244	0.00283	0.00323	0.00362	**0.002**
0.003	0.00012	0.00051	0.00091	0.00130	0.00169	0.00209	0.00248	0.00287	0.00327	0.00366	**0.003**
0.004	0.00016	0.00055	0.00094	0.00134	0.00173	0.00213	0.00252	0.00291	0.00331	0.00370	**0.004**
0.005	0.00020	0.00059	0.00098	0.00138	0.00177	0.00217	0.00256	0.00295	0.00335	0.00374	**0.005**
0.006	0.00024	0.00063	0.00102	0.00142	0.00181	0.00220	0.00260	0.00299	0.00339	0.00378	**0.006**
0.007	0.00028	0.00067	0.00106	0.00146	0.00185	0.00224	0.00264	0.00303	0.00343	0.00382	**0.007**
0.008	0.00031	0.00071	0.00110	0.00150	0.00189	0.00228	0.00268	0.00307	0.00346	0.00386	**0.008**
0.009	0.00035	0.00075	0.00114	0.00154	0.00195	0.00232	0.00272	0.00311	0.00350	0.00390	**0.009**

Milli-meter	0	0.1	0.2	0.3	0.4	0.5	0.6	0.7	0.8	0.9	Milli-meter
	in.	in.	in.	in.	in.	in.	in.	in.	in.	in.	
0	.....	0.00394	0.0787	0.01181	0.01575	0.01969	0.02362	0.02756	0.03150	0.03543	**0**
0.01	0.00039	0.00433	0.00827	0.01220	0.01614	0.02008	0.02402	0.02795	0.03189	0.03583	**0.01**
0.02	0.00079	0.00472	0.00866	0.01260	0.01654	0.02047	0.02441	0.02835	0.03228	0.03622	**0.02**
0.03	0.00118	0.00512	0.00906	0.01299	0.01693	0.02087	0.02480	0.02874	0.03268	0.03661	**0.03**
0.04	0.00157	0.00551	0.00945	0.01339	0.01732	0.02126	0.02520	0.02913	0.03307	0.03701	**0.04**
0.05	0.00197	0.00591	0.00984	0.01378	0.01772	0.02165	0.02559	0.02953	0.03346	0.03740	**0.05**
0.06	0.00236	0.00630	0.01024	0.01417	0.01811	0.02205	0.02598	0.02992	0.03386	0.03780	**0.06**
0.07	0.00276	0.00669	0.01063	0.01457	0.01850	0.02244	0.02638	0.03031	0.03425	0.03819	**0.07**
0.08	0.00315	0.00709	0.01102	0.01496	0.01890	0.02283	0.02677	0.03071	0.03465	0.03858	**0.08**
0.09	0.00354	0.00748	0.01142	0.01535	0.01929	0.02323	0.02717	0.03110	0.03504	0.03898	**0.09**

Milli-meter	0	1	2	3	4	5	6	7	8	9	Milli-meter
	in.	in.	in.	in.	in.	in.	in.	in.	in.	in.	
0	.....	0.03937	0.07874	0.11811	0.15748	0.19685	0.23622	0.27559	0.31496	0.35433	**0**
0.1	0.00394	0.04331	0.08268	0.12205	0.16142	0.20079	0.24016	0.27953	0.31890	0.35827	**0.1**
0.2	0.00787	0.04724	0.08661	0.12598	0.16535	0.20472	0.24409	0.28346	0.32283	0.36220	**0.2**
0.3	0.01181	0.05118	0.09055	0.12992	0.16929	0.20866	0.24803	0.28740	0.32677	0.36614	**0.3**
0.4	0.01575	0.05512	0.09449	0.13386	0.17323	0.21260	0.25197	0.29134	0.33071	0.37008	**0.4**
0.5	0.01969	0.05906	0.09843	0.13780	0.17717	0.21654	0.25591	0.29528	0.33465	0.37402	**0.5**
0.6	0.02362	0.06299	0.10236	0.14173	0.18110	0.22047	0.25984	0.29921	0.33858	0.37795	**0.6**
0.7	0.02756	0.06693	0.10630	0.14567	0.18504	0.22441	0.26378	0.30315	0.34252	0.38189	**0.7**
0.8	0.03150	0.07087	0.11024	0.14961	0.18898	0.22835	0.26772	0.30709	0.34646	0.38583	**0.8**
0.9	0.03543	0.07480	0.11417	0.15354	0.19291	0.23228	0.27165	0.31102	0.35039	0.38976	**0.9**

Milli-meter	0	10	20	30	40	50	60	70	80	90	Milli-metre
	in.	in.	in.	in.	in.	in.	in.	in.	in.	in.	
0	.....	0.39370	0.78740	1.18110	1.57480	1.96850	2.36220	2.75591	3.14961	3.54331	**0**
1	0.03937	0.43307	0.82677	1.22047	1.61417	2.00787	2.40157	2.79528	3.18898	3.58268	**1**
2	0.07874	0.47224	0.86614	1.25984	1.65354	2.04724	2.44094	2.83465	3.22835	3.62205	**2**
3	0.11811	0.51181	0.90551	1.29921	1.69291	2.08661	4.48031	2.87402	3.26772	3.66142	**3**
4	0.15748	0.55118	0.94488	1.33858	1.73228	2.12598	2.51969	2.91339	3.30709	3.70079	**4**
5	0.19685	0.59055	0.98425	1.37795	1.77165	2.16535	2.55906	2.95276	3.34646	3.74016	**5**
6	0.23622	0.62992	1.02362	1.41732	1.81102	2.20472	2.59843	2.99213	3.38583	3.77953	**6**
7	0.27559	0.66929	1.06299	1.45669	1.85039	2.24409	2.63780	3.03150	3.42520	3.81890	**7**
8	0.31496	0.70866	1.10236	1.49606	1.88976	2.28346	2.67717	3.07087	3.46457	3.85827	**8**
9	0.35433	0.74803	1.14173	1.53543	1.92913	2.32283	2.71654	3.11024	3.50394	3.89764	**9**

Decimals of an inch into decimals of a millimeter

	0"	0.001"	0.002"	0.003"	0.004"	0.005"	0.006"	0.007"	0.008"	0.009"	
Inches	mm.	mm.	mm.	mm.	mm.	mm.	mm.	mm.	mm.	mm.	Inches
0	.....	0.02540	0.05080	0.07620	0.10160	0.12700	0.15240	0.17780	0.20320	0.22860	**0**
0.0001	0.00254	0.02794	0.05334	0.07874	0.10414	0.12954	0.15494	0.18034	0.20574	0.23114	**0.0001**
0.0002	0.00508	0.03048	0.05588	0.08128	0.10668	0.13208	0.15748	0.18288	0.20828	0.23368	**0.0002**
0.0003	0.00762	0.03302	0.05842	0.08382	0.10922	0.13462	0.16002	0.18542	0.21082	0.23622	**0.0003**
0.0004	0.01016	0.03556	0.06096	0.08636	0.11176	0.13716	0.16256	0.18796	0.21336	0.23876	**0.0004**
0.0005	0.01270	0.03810	0.06350	0.08890	0.11430	0.13970	0.16510	0.19050	0.21590	0.24130	**0.0005**
0.0006	0.01524	0.04064	0.06604	0.09144	0.011684	0.14224	0.16764	0.19304	0.21844	0.24384	**0.0006**
0.0007	0.01778	0.04318	0.06858	0.09398	0.11938	0.14478	0.17018	0.19558	0.22098	0.24384	**0.0007**
0.0008	0.02032	0.04572	0.07112	0.09652	0.12192	0.14732	0.17272	0.19812	0.22352	0.24892	**0.0008**
0.0009	0.02286	0.04826	0.07366	0.09906	0.12446	0.14986	0.17526	0.20066	0.22606	0.25146	**0.0009**

	0"	0.01"	0.02"	0.03"	0.04"	0.05"	0.06"	0.07"	0.08"	0.09"	
Inches	mm.	mm.	mm.	mm.	mm.	mm.	mm.	mm.	mm.	mm.	Inches
0	.....	0.2540	0.5080	0.7620	1.0160	1.2700	1.5240	1.7780	2.0320	2.2860	**0**
0.001	0.0254	0.2794	0.5334	0.7874	1.0414	1.2954	1.5494	1.8034	2.0574	2.3114	**0.001**
0.002	0.0508	0.3048	0.5588	0.8128	1.0668	1.3208	1.5748	1.8288	2.0828	2.3368	**0.002**
0.003	0.0762	0.3302	0.5842	0.8382	1.0922	1.3462	1.6002	1.8542	2.1082	2.3622	**0.003**
0.004	0.1016	0.3556	0.6096	0.8636	1.1176	1.3716	1.6256	1.8796	2.1336	2.3876	**0.004**
0.005	0.1270	0.3810	0.6350	0.8890	1.1430	1.3970	1.6510	1.9050	2.1590	2.4130	**0.005**
0.006	0.1524	0.4064	0.6604	0.9144	1.1684	1.4224	1.6764	1.9304	2.1844	.2.4384	**0.006**
0.007	0.1778	0.4318	0.6858	0.9398	1.1938	1.4478	1.7018	1.9558	2.2098	2.4384	**0.007**
0.008	0.2032	0.4572	0.7112	0.9652	1.2192	1.4732	1.7272	1.9812	2.2352	2.4892	**0.008**
0.009	0.2286	0.4826	0.7366	0.9906	1.2446	1.4986	1.7526	2.0066	2.2606	2.5146	**0.009**

	0"	0.1"	0.2"	0.3"	0.4"	0.5"	0.6"	0.7"	0.8"	0.9"	
Inches	mm.	mm.	mm.	mm.	mm.	mm.	mm.	mm.	mm.	mm.	Inches
0	.....	2.540	5.080	7.620	10.160	12.700	15.240	17.780	20.320	22.860	**0**
0.01	0.254	2.794	5.334	7.874	10.414	12.954	15.494	18.034	20.574	23.114	**0.01**
0.02	0.508	3.048	5.588	8.128	10.668	13.208	15.748	18.288	20.828	23.368	**0.02**
0.03	0.762	3.302	5.842	8.382	10.922	13.462	16.002	18.542	21.082	23.622	**0.03**
0.04	1.016	3.556	6.096	8.636	11.176	13.716	16.256	18.796	21.336	23.876	**0.04**
0.05	1.270	3.810	6.350	8.890	11.430	13.970	16.510	19.050	21.590	24.130	**0.05**
0.06	1.524	4.064	6.604	9.144	11.684	14.224	16.764	19.304	21.844	24.384	**0.06**
0.07	1.778	4.318	6.858	9.398	11.938	14.478	17.018	19.558	22.098	24.384	**0.07**
0.08	2.032	4.572	7.112	9.652	12.192	14.732	17.272	19.812	22.352	24.892	**0.08**
0.09	2.286	4.826	7.366	9.906	12.446	14.986	17.526	20.066	22.606	25.146	**0.09**

	0"	1"	2"	3"	4"	5"	6"	7"	8"	9"	
Inches	mm.	mm.	mm.	mm.	mm.	mm.	mm.	mm.	mm.	mm.	Inches
0	.....	25.40	50.80	76.20	101.60	127.00	152.40	177.80	203.20	228.60	**0**
0.1	2.54	27.94	53.34	78.74	104.14	129.54	154.94	180.34	205.74	231.14	**0.1**
0.2	5.08	30.48	55.88	81.28	106.68	132.08	157.48	182.88	208.28	233.68	**0.2**
0.3	7.62	33.02	58.42	83.82	109.22	134.62	160.02	185.42	210.82	236.22	**0.3**
0.4	10.16	35.56	60.96	86.36	111.76	137.16	162.56	187.96	213.36	238.76	**0.4**
0.5	12.70	38.10	63.50	88.90	114.30	139.70	165.10	190.50	215.90	241.30	**0.5**
0.6	15.24	40.64	66.04	91.44	116.84	142.24	167.64	193.04	218.44	243.84	**0.6**
0.7	17.78	43.18	68.58	93.98	119.38	144.78	170.18	195.58	220.98	243.84	**0.7**
0.8	20.32	45.72	71.12	96.52	121.92	147.32	172.72	198.12	223.52	248.92	**0.8**
0.9	22.86	48.26	73.66	99.06	124.46	149.86	175.26	200.66	226.06	251.46	**0.9**

Fractional inches into millimeters

Inches	0" mm.	1" mm.	2" mm.	3" mm.	4" mm.	5" mm.	6" mm.	7" mm.	8" mm.	9" mm.	Inches
0	....	25.400	50.800	76.200	101.600	127.000	152.400	177.800	203.200	228.600	0
1/64	0.397	25.797	51.197	76.597	101.997	127.397	152.797	178.197	203.597	228.997	1/64
1/32	0.794	26.194	51.594	76.994	102.394	127.794	153.194	178.594	203.994	229.394	1/32
3/64	1.191	26.591	51.991	77.391	102.791	128.191	153.591	178.991	204.391	229.791	3/64
1/16	1.588	26.988	52.388	77.788	103.188	128.588	153.988	179.388	204.788	230.188	1/16
5/64	1.984	27.384	52.784	78.184	103.584	128.984	154.384	179.784	205.184	230.584	5/64
3/32	2.381	27.381	53.181	78.581	103.981	129.381	154.781	180.181	205.581	230.981	3/32
7/64	2.778	28.178	53.578	78.978	104.378	129.778	155.178	180.578	205.978	231.378	7/64
1/8	3.175	28.575	53.975	79.375	104.775	130.175	155.575	180.975	206.375	231.775	1/8
9/64	3.572	28.972	54.372	79.772	105.172	130.572	155.972	181.372	206.772	232.172	9/64
5/32	3.969	29.369	54.769	80.169	105.569	130.969	156.369	181.769	207.169	232.569	5/32
11/64	4.366	29.766	55.166	80.566	105.966	131.366	156.766	182.166	207.566	232.966	11/64
3/16	4.763	30.163	55.563	80.963	106.363	131.763	157.163	182.563	207.963	233.363	3/16
13/64	5.159	30.559	55.959	81.359	106.759	132.159	157.559	182.959	208.359	233.759	13/64
7/32	5.556	30.956	56.356	81.756	107.156	132.556	157.956	183.356	208.756	234.156	7/32
15/64	5.953	31.353	56.753	82.153	107.553	132.953	158.353	183.753	209.153	234.553	15/64
1/4	6.350	31.750	57.150	82.550	107.950	133.350	158.750	184.150	209.550	234.950	1/4
17/64	6.747	32.147	57.547	82.947	108.347	133.747	159.147	184.547	209.947	235.347	17/64
9/32	7.144	32.544	57.944	83.344	108.744	134.144	159.544	184.944	210.344	235.744	9/32
19/64	7.541	32.941	58.341	83.741	109.141	134.541	159.941	185.341	210.741	236.141	19/64
5/16	7.938	33.338	58.738	84.138	109.538	134.938	160.338	185.738	211.138	236.538	5/16
21/64	8.334	33.734	59.134	84.534	109.934	135.334	160.734	186.134	211.534	236.934	21/64
11/32	8.731	34.131	59.531	84.931	110.331	135.731	161.131	186.531	211.931	237.331	11/32
23/64	9.128	34.528	59.928	85.328	110.728	136.128	161.528	186.928	212.328	237.728	23/64
3/8	9.525	34.925	60.325	85.725	111.125	136.525	161.925	187.325	212.725	238.125	3/8
25/64	9.922	35.322	60.722	86.122	111.522	136.922	162.322	187.722	213.122	238.522	25/64
13/32	10.319	35.719	61.119	86.519	111.919	137.319	162.719	188.119	213.519	238.919	13/32
27/64	10.716	36.116	61.516	86.916	112.316	137.716	163.116	188.516	213.916	239.316	27/64
7/16	11.113	36.513	61.913	87.313	112.713	138.113	163.513	188.913	214.313	239.713	7/16
29/64	11.509	36.909	62.309	87.709	113.109	138.509	163.909	189.309	214.709	240.109	29/64
15/32	11.906	37.306	62.706	88.106	113.509	138.906	164.306	189.706	215.106	240.506	15/32
31/64	12.303	37.703	63.103	88.503	113.903	139.303	164.703	190.103	215.503	240.903	31/64
1/2	12.700	38.100	63.500	88.900	114.300	139.700	165.100	190.500	215.900	241.300	1/2
33/64	13.097	38.497	63.897	89.297	114.697	140.097	165.497	190.897	216.297	241.697	23/64
17/32	13.494	38.894	64.294	89.694	115.094	140.494	165.894	191.294	216.694	242.094	17/32
35/64	13.891	39.291	64.691	90.091	115.491	140.891	166.291	191.691	217.091	242.491	35/64
9/16	14.288	39.688	65.088	90.488	115.888	141.288	166.688	192.088	217.488	242.888	9/16
37/64	14.684	40.084	65.484	90.884	116.284	141.684	167.084	192.484	217.884	243.284	37/64
19/32	15.081	40.481	65.881	91.281	116.681	142.081	167.481	192.881	218.281	243.681	18/32
39/64	15.478	40.878	66.287	91.678	117.078	142.478	167.878	193.278	218.678	244.078	39/64
5/8	15.875	41.275	66.675	92.075	117.475	142.875	168.275	193.675	219.075	244.475	5/8
41/64	16.272	41.672	67.072	92.472	117.872	143.272	168.672	194.072	219.472	244.872	41/64
21/32	16.699	42.069	64.469	92.869	118.269	143.669	169.069	194.469	219.869	245.269	21/32
46/64	17.066	42.466	67.866	93.266	118.666	144.066	169.466	194.866	220.266	245.666	46/64
11/16	17.463	42.863	68.263	93.663	119.063	144.463	169.863	195.263	220.663	246.063	11/16
45/64	17.859	43.529	68.659	94.059	119.459	144.859	170.259	195.659	221.059	246.459	45/64
23/32	18.256	43.656	69.056	94.456	119.856	145.256	170.656	196.056	221.456	246.856	23/32
47/64	18.653	44.053	69.453	94.853	120.253	145.653	171.053	196.453	221.853	247.253	47/64
3/4	19.050	44.450	69.850	95.250	120.650	146.050	171.450	196.850	222.250	247.650	3/4
49/64	19.447	44.847	70.247	95.647	121.047	146.477	171.847	197.247	222.647	248.047	49/64
25/32	19.844	45.244	70.644	96.044	121.444	146.844	172.244	197.644	223.044	248.444	25/32
51/64	20.241	45.641	71.041	96.441	121.841	147.241	172.641	198.041	223.441	248.841	51/64
13/16	20.638	46.038	71.438	96.838	122.238	147.638	173.038	198.438	223.838	249.238	13/16

Fractional inches into millimeters

Inches	0" mm.	1" mm.	2" mm.	3" mm.	4" mm.	5" mm.	6" mm.	7" mm.	8" mm.	9" mm.	Inches
53/64	21.034	46.434	71.834	97.234	122.634	148.034	173.434	198.834	224.234	249.634	53/64
27/32	21.431	46.831	72.231	97.631	123.031	148.431	173.831	199.231	224.631	250.031	27/32
55/64	21.828	47.228	72.628	98.028	123.428	148.828	174.228	199.628	225.028	250.428	55/64
7/8	22.225	47.625	73.025	98.425	123.825	149.225	174.625	200.025	225.425	250.825	7/8
57/64	22.622	48.022	73.422	98.822	124.222	149.622	175.022	200.422	225.822	251.222	57/64
29/32	23.019	48.419	73.819	99.219	124.619	150.019	175.419	200.819	226.219	251.619	29/32
59/64	23.416	48.816	72.216	99.616	125.016	150.416	175.816	201.216	226.616	252.016	59/64
15/16	23.813	49.213	74.613	100.013	125.413	150.813	176.213	201.613	227.013	252.413	15/16
61/64	24.209	49.609	75.009	100.409	125.809	151.209	176.609	202.009	227.409	252.809	61/64
31/32	24.606	50.006	75.406	100.806	126.206	151.606	177.006	202.406	227.806	253.206	31/32
63/64	25.003	50.403	75.803	101.203	126.603	152.003	177.403	202.803	228.203	253.603	63/64

Temperature Conversion Tables (F° and C°)

Example: Centre column "0" degrees, if Celsius it would be 32 degrees F, if it was Fahrenheit it would be -17.8 degrees C.

-459.4 to 0			0 to 100			100 to 1000					
C		F	C		F	C		F	C		F
-273	-459.4	.....	**-17.8**	**0**	**32**	10.0	50	122.0	38	100	212	260	500	932
-268	-450	.....	-17.2	1	33.8	10.6	51	123.8	43	110	230	266	510	950
-262	-440	.....	-16.7	2	35.6	11.1	52	125.6	49	120	248	271	520	968
-257	-430	.....	-16.1	3	37.4	11.7	53	127.4	54	130	266	277	530	986
-251	-420	.....	-15.6	4	39.2	12.2	54	129.2	60	140	284	282	540	1004
-246	-410	.....	-15.0	5	41.0	12.8	55	131.0	66	150	302	288	550	1022
-240	-400	.....	-14.4	6	42.8	13.3	56	132.8	71	160	320	293	560	1040
-234	-390	.....	-13.9	7	44.6	13.9	57	134.6	77	170	338	299	570	1058
-229	-380	.....	-13.3	8	46.4	14.4	58	136.4	82	180	356	304	580	1076
-223	-370	.....	-12.8	9	48.2	15.0	59	138.2	88	190	374	310	590	1094
-218	-360	.....	-12.2	10	50.0	15.6	60	140.0	93	200	392	316	600	1112
-212	-350	.....	-11.7	11	51.8	16.1	61	141.8	99	210	410	321	610	1130
-207	-340	.....	-11.1	12	53.6	16.7	62	143.6	100	212	413.6	327	620	1148
-201	-330	.....	-10.6	13	55.4	17.2	63	145.4	104	220	428	332	630	1166
-196	-320	.....	-10.0	14	57.2	17.8	64	147.2	110	230	436	338	640	1184
-190	-310	.....	-9.4	15	59.0	18.3	65	149.0	116	240	464	343	650	1202
-184	-300	.....	-8.9	16	60.8	18.9	66	150.8	121	250	482	349	660	1220
-179	-290	.....	-8.3	17	62.6	19.4	67	152.6	127	260	500	354	670	1238
-173	-280	.....	-7.8	18	64.4	20.0	68	154.4	132	270	518	360	580	1256
-169	-273	-459.4	-7.2	19	66.2	20.6	69	156.2	138	280	536	366	690	1274
-168	-270	-454	-6.7	20	68.0	21.1	70	158.0	143	290	554	371	700	1292
-162	-260	-436	-6.1	21	69.8	21.7	71	159.8	149	300	572	377	710	1310
-157	-250	-418	-5.6	22	71.6	22.2	72	161.6	154	310	590	382	720	1328
-151	-240	-400	-5.0	23	73.4	22.8	73	163.4	160	320	608	388	730	1346
-146	-230	-382	-4.4	24	75.2	23.3	74	165.2	166	330	626	393	740	1364
-140	-220	-364	-3.9	25	77.0	23.9	75	167.0	171	340	644	399	750	1382
-134	-210	-346	-3.3	26	78.8	24.4	76	168.8	177	350	662	404	760	1400
-129	-200	-328	-2.8	27	80.6	25.0	77	170.6	182	360	680	410	770	1418
-123	-190	-310	-2.2	28	82.4	25.6	78	172.4	188	370	698	416	780	1436
-118	-180	-292	-1.7	29	84.2	26.1	79	174.2	193	380	716	421	790	1454
-112	-170	-274	-1.1	30	86.0	26.7	80	176.0	199	390	734	427	800	1472
-107	-160	-256	-.6	31	87.9	27.2	81	177.8	204	400	752	432	810	1490
-101	-150	-238	0.	32	89.6	27.8	82	179.6	210	410	770	438	820	1508
-96	-140	-220	.6	33	91.4	28.3	83	181.4	216	420	788	443	830	1526
-90	-130	-202	1.1	34	93.2	28.9	84	183.2	221	430	806	449	840	1544
-84	-120	-184	1.7	35	95.0	29.4	85	185.0	227	440	824	454	850	1562
-79	-110	-166	2.2	36	96.8	30.0	86	186.8	232	450	842	460	860	1580
-73	-100	-148	2.8	37	98.6	30.6	87	188.6	238	460	860	466	870	1598
-68	-90	-130	3.3	38	100.4	31.1	88	190.4	243	470	878	471	880	1616
-62	-80	-112	3.9	39	102.2	31.7	89	192.2	249	480	896	477	890	1634
-57	-70	-94	4.4	40	104.0	32.2	90	194.0	254	490	914	482	900	1652
-51	-60	-76	5.0	41	105.8	32.8	91	195.8	....	....	....	488	910	1670
-46	-50	-58	5.6	42	107.6	33.3	92	197.6	....	....	....	493	920	1688
-40	-40	-40	6.1	43	109.4	33.9	93	199.4	....	....	....	499	930	1706
-34	-30	-22	6.7	44	111.2	34.4	94	201.2	....	....	....	504	940	1724
-29	-20	-4	7.2	45	113.0	35.0	95	203.0	....	....	....	510	950	1742
-23	-10	14	7.8	46	114.8	35.6	96	204.8	....	....	....	516	960	1760
-17.8	0	32	8.3	47	116.6	36.1	97	206.6	....	....	....	522	970	1778
.....	.....	.....	8.9	48	118.4	36.7	98	208.4	....	....	....	527	980	1796
.....	.....	.....	9.4	49	120.2	37.2	99	210.2	....	....	....	532	990	1814
.....	.....	.....	.....	.....	.....	37.8	100	212.0	....	....	....	538	1000	1832

Subject Index

Subject	Page
Adapter Sleeves	
Metric	260
Inch	266
Bearings	
CARB	309
Self-Aligning Ball Bearings	295
Spherical Roller Bearings	299
Clearance Tables	40
Clearance reduction for Spherical Roller Bearings	42
Tightening angle for Self-Aligning Bearings	18
Hydraulic Nuts	256
Metric thread	
Inch sizes (please see Bearing catalogue 925)	
Locking Devices	
Metric Showing locking device and wrench	242
Imperial Showing locking device and wrench	246
KMFE design for CARB or high speed applications	250
Shaft dimensions and thread details	290
Locking Washers or Plates	
Metric (MB).	252
Imperial (W, W0).	254
Lubrication	
General	30
Application in Pillow Blocks	31
Oil Lubrication	33
Relubrication Intervals	34
Initial Grease Charge in Split Blocks	36
Lubrication Fittings	37
Grease Chart (Inside back cover)	
Mounting of bearings	
Basic procedures	16
With seals	16
On Sleeves	17

Subject	Page
Mounting of bearings with:	
G seals (double lip)	20
A seals (V ring)	21
C seals (Felt)	22
LER/LOR Labyrinth seals	23
S/TS Labyrinth seals	24
LOR/LORP c/w Contact Elements	25
TER-C seals	26
TER-CV	27
TNF	27
TSNC/TSDC “D” design	28
TSNC/TSDC “E” design	29
Seals	
Selection chart	6
Speed Limits	8
Standard designs	10
End covers	19
Shaft dimensions and thread details	
Metric Locknuts	290
Imperial Locknuts	292
Shaft, end of shaft lengths	
“S” dimension	52
Shaft Tolerances and Fits	
Adapter mounts	38
Permissible taper and ovality	38

Bearing operating parameters

Temperature

L	= Low	< 50° C/ 122°F
M	= Medium	50 to 100° C/ 122 to 230°F
H	= High	> 100 ° C/ 212°F
EH	= Extremely High	> 150 °C /132 °F

Speed for roller bearings

		SRB/TRB/CARB®	CRB
H	= High	n.dm over 210,000	n.dm over 270,000
M	= Medium	n.dm up to 210,000	n.dm up to 270,000
L	= Low	n.dm up to 75,000	n.dm up to 75,000
VL	= Very Low	n.dm up to 30,000	n.dm up to 30,000

Speed for ball bearings

EH	= Exremely High	n.dm over 700,000
VH	= Very High	n.dm up to 700,000
H	= High	n.dm up to 500,000
M	= Medium	n.dm up to 300,000
L	= Low	n.dm below 100,000

Load

VH	= Very high	C/P <2
H	= High	C/P ~4
M	= Medium	C/P ~8
L	= Low	C/P ≥15

Terminology for Parameters

n:	Speed, rpm
c:	Dynamic load rating
p:	Equivalent bearing load
dm:	$\frac{D + d}{2}$

GET CONNECTED - CONTACT SKF CANADA

SKF Canada Limited - Head Office
40 Executive Court
Scarborough, Ontario
M1S 4N4
Tel: +1 416 299 1220
8:00a.m. - 8:00p.m. EST Monday to Friday

SKF Canada Limited - Montreal
101 Avenue Lindsay
Dorval, Quebec
H9P 2S6
Tel: (514) 636-5230
7:00a.m. - 5:00p.m. EST Monday to Friday

SKF Canada Limited - Vancouver
1480 Kootenay Street
Vancouver, BC
V5K 4R1
Tel: (604) 291-0992
7:30a.m. - 5:00p.m. PT Monday to Friday

SKF Canada Customer Service & Support
Tel: 1 (866) TEAM SKF or (1-866-832-6753)
Fax: +1 416 292 0399
E-mail: marketing@skf.ca
Home Page: www.skf.ca
8:00a.m. - 8:00p.m. EST Monday to Friday

SKF Canada Limited - Edmonton
4125 84 Avenue
Edmonton, AB
T6B 3H3
Tel: (780) 466-5219
8:00a.m. - 5:00p.m. MT Monday to Friday

After Hours Emergency Rush Shipments:
Montreal: 1-514-891-1184
Scarborough: 1-866-238-4687
Vancouver: 1-866-238-4687
Edmonton: 1-866-238-4687

Technical Support Hotline:
Montreal: 1-514-636-5230
Scarborough: 416-299-2810
Vancouver: 1-604-291-0992
(Ext. 227 or 228)

HOW TO ORDER - to order your catalogues online please visit our website at www.skf.ca or email us at marketing@skf.ca



(#CDN925)

To obtain a copy of SKF's 925 Bearing Catalogue, please e-mail marketing@skf.ca or visit www.skf.ca/catalogues

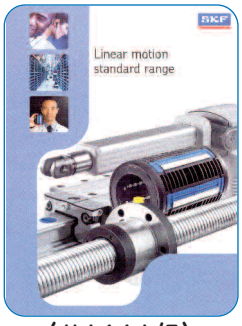

(#4664/5)

To obtain a copy of SKF's Linear Motion Catalogue, please e-mail marketing@skf.ca or visit www.skf.ca/catalogues

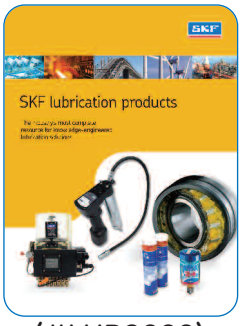

(#LUB3000)

To obtain a copy of SKF's Lubrication Products Catalogue, please e-mail marketing@skf.ca or visit www.skf.ca/catalouges

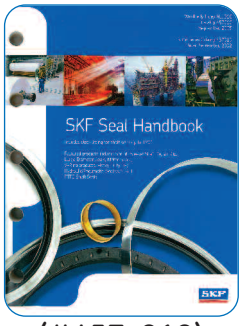

(#457-010)

To obtain a copy of SKF's Seal Handbook Catalogue, please e-mail marketing@skf.ca or visit www.skf.ca/catalogues



(#MP3000)

To obtain a copy of SKF's Maintenance and Lubrication Catalogue, please e-mail marketing@skf.ca or visit www.skf.ca/catalogues

To order online, please go to www.skf.ca/catalogues to order any one of the catalouges listed above or contact marketing@skf.ca to find out more.

SKF PLATFORMS - Brief Overview

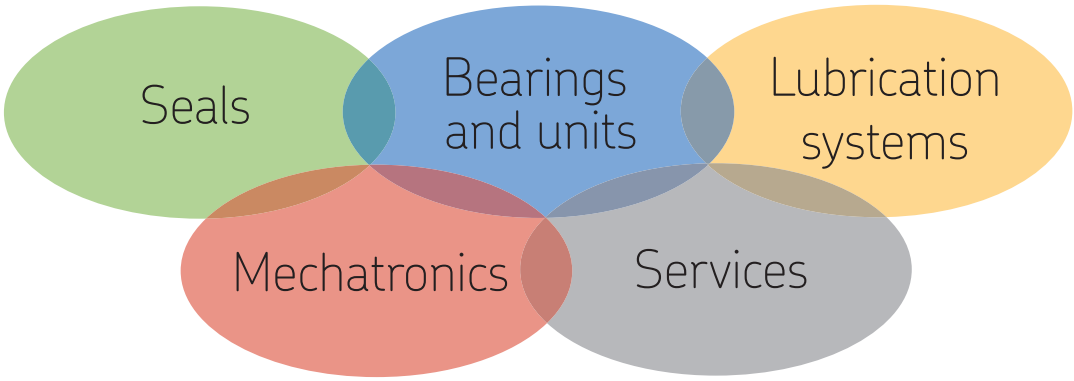

SEALS
- Seal Application Reviews (Industrial shaft and hydraulic seals)
- Design and manufacture of special sealing solutions
- Root Cause Failure Analysis

BEARIINGS AND UNITS
- Bearings and units Application reviews
- Lubrication reviews
- Root Cause Failure Analysis

LUBRICATION SYSTEMS
- Lubrication system design of almost every kind
- System installation and troubleshooting

MECHATRONICS
- Linear bearing reviews and product selection
- Ball/Roller screw reviews
- Actuation system reviews
- Design of special solutions
- Root Cause Failure Analysis

SERVICES
- Technical Training
- Bearing installation and maintenance services
- Bearing refurbishment and repair services
- Condition monitoring services
- Design of special housings and components



SKF bearing greases overview chart

Bearing working conditions	Temp	Speed	Load	Vertical shaft	Fast outer ring rotation	Oscillating movements	Severe vibrations	Shock load or frequent start-ups	Pump-ability	Rust inhibiting properties	Description	Typical Applications		Temperature range (*1) LTL	Temperature range (*1) HTPL	Thickener / base oil	Base oil viscosity (*2)
LGAP 0 (*8)	M	NS (*7)	L to M	—	—	—	—	—	+	+	General purpose	• Agricultural equipment • Automotive wheel bearings • Conveyors • Small electric motors • Indusrial fans		0° F -18° C	266 °F 130 °C	Lithium soap/mineral oil	110
LGAP 1 (*7)	M	L	L to M	—	—	—	—	—	+	+	General purpose	• Agricultural equipment • Automotive wheel bearings • Conveyors • Small electric motors • Indusrial fans		0° F -18° C	266 °F 130 °C (*9)	Lithium soap/mineral oil	110
LGAP 2 (*6)	M	M	L to M	○	—	—	+	—	○ (*10)	+	General purpose	• Agricultural equipment • Automotive wheel bearings • Conveyors • Small electric motors • Indusrial fans		0° F -18° C	266 °F 130 °C	Lithium soap/mineral oil	110
LGMT 3	M	M	L to M	+	○	—	+	—	○	○	General purpose	• Bearings >100 mm (3.9 in) shaft size • Outer bearing ring rotation • Vertical shaft appications • Continuous high ambient temperatures >35 °C (95° F)	• Propeller shafts • Agricultural equipment • Car, truck and trailer wheel bearings • Large electric motors	-22° F -30° C	250 °F 120 °C	Lithium soap/mineral oil	120
LGEL 2	M	L to M	H	○	—	○	+	+	+	+	**Extreme pressure**	• Pulp and paper making machines • Traction motors for rail vehicles • Work roll bearings in steel industry • Heavy machinery, vibrating screens	• Jaw crushers • Dam gates • Crane wheels, sheaves	-5° F -21° C	290 °F 143 °C	Lithium complex/mineral oil	210
LGFA 00 (*8)	M	NS (*7)	L to M	—	—	—	—	—	+	+	Food compatible	• Bakery equipment • Food processing equipment • Multi-pack cassette bearings • Wrapping machines	• Conveyor bearings • Bottling machines	-5° F -21° C	250 °F 121°C	Aluminum complex/ white mineral oil	68
LGFA 0 (*8)	M	NS (*7)	L to M	—	—	—	—	—	+	+	Food compatible	• Bakery equipment • Food processing equipment • Multi-pack cassette bearings • Wrapping machines	• Conveyor bearings • Bottling machines	-5° F -21° C	250 °F 121°C	Aluminum complex/ white mineral oil	68
LGFA 1 (*7)	M	L	L to M	—	—	—	—	—	+	+	Food compatible	• Bakery equipment • Food processing equipment • Multi-pack cassette bearings • Wrapping machines	• Conveyor bearings • Bottling machines	-5° F -21° C	250 °F 121°C	Aluminum complex/ white mineral oil	68
LGFA 2 (*6)	M	M	L to M	○	—	—	+	—	○ (*10)	+	Food compatible	• Bakery equipment • Food processing equipment • Multi-pack cassette bearings • Wrapping machines	• Conveyor bearings • Bottling machines	-5° F -21° C	250 °F 121°C	Aluminum complex/ white mineral oil	68
LGEM 2	M	VL	H to VH	○	—	+	+	+	○	+	High viscosity plus solid lubricants	• Rolling element bearings running at low speed and very high loads • Jaw crushers • Track laying machines	• Lift mast wheels • Building machines such as mechancial rams, crane arms and crane hooks	-20° C -4° F	120 °C 250 °F	Lithium complex/mineral oil	500
LGEV 2	M	VL	H to VH	○	—	+	+	+	○	+	Extremely high viscosity with solid lubricants	• Trunnion bearings on rotating drums • Support and thrust rollers on rotary kilns and dryers • Bucket wheel excavators	• Slewing ring bearings • High pressure roller mills • Crushers	-10° C -14° F	120 °C 250 °F	Lithium-calcium soap/mineral oil	1 020
LGLT 2	L to M	M to EH	L	○	—	—	—	○	—	○	Low temperature, extremely high speed	• Textile spinning spindles • Machine tool spindles • Instruments and control equipment • Small electic motors used in medical and dental equipment	• In-line skates • Printing cyclinders • Robots	-50° C -58° F	110 °C 230 °F	Lithium soap/PAO oil	18
LGGB 2	L to M	L to M	M to H	○	—	+	+	+	○	○	Green biodegradable, low toxicity	• Agricultural and foresty equipment • Locks, dams, bridges • Mining and conveying equipment • Water treatment & irrigation • Linkages, rod ends	• Construction and earth moving equipment • Other applications where contamination of the environment is a concern	-40° C -40° F	90 °C (*3) 194 °F	Lithium-calcium soap/synthetic ester oil	110
LGWM 1	L to M	L to M	H	—	—	+	—	+	—	+	Extreme pressure, low pressure	• Windmills • Screw conveyors • Centralized lubrication systems • Spherical roller thrust bearing applications		-30° C -22° F	110 °C 230 °F	Lithium soap/mineral oil	200
LGWA 2	M to H	L to M	H	○	○	○	○	+	○	+	Wide temperature (*4) extreme pressu9e	• Wheel bearings in cars, trailers and trucks • Washing machines • Electric motors		-30° C -22° F	140 °C 284 °F	Lithium complex soap/mineral oil	185
LGHB 2	M to H	VL to M	H to VH	○	+	+	+	+	○	+	EP high viscosity, high temperature (*5)	• Steel on steel plain bearings • Pulp and paper making machines • Asphalt vibrating screens • Continous casting machines • Work roll bearings in steel industry	• Sealed spherical roller bearings operating up to 150°C (302°F) • Withstands peak temperatures of 200°C (392°F)	-20° C -4° F	150 °C 302 °F	Complex calcium sulphonate/mineral oil	400
LGHP 2	M to H	M to H	L to M	+	—	—	+	○	○	+	High performance polyurea grease	• Verical shafts • Severe vibrations • Low noise • Rust inhibiting properties		-40° C -40° F	150 °C 302 °F	Di-urea/mineral oil	96
LGET 2	VH	L to M	H to VH	○	+	+	○	○	○	+	Extreme temperature	• Bakery equipment (ovens) • Kiln truck wheels • Load rollers in copying machines • Wafer baking machines • Textile dryers	• Film stretching tenders • Electric motors running at extreme temperatures • Emergency / hot fans • Vacuum pumps	-40° C -40° F	260 °C 500 °F	PTFE/synthetic (fluorinated polyether)	400

+ = Recommended ○ = Suitable

NS = Not specified — = Not suitable

SKF Canada Limited
40 Executive Court
Scarborough, Ontario
M1S 4N4

Montreal
101 Ave. Lindsay
Dorval, Quebec
H9P 2S6

Edmonton
5220 75th Street
Edmonton, Alberta
T6E 5S4

Vancouver
1480 Kootenay Street
Vancouver, B.C.
V5K 4R1

® SKF is a registered trademark of SKF Canada Limited. The contents of this publication are the copyright of the publisher and may not be reproduced (even extracts) unless permission is granted. Every care has been taken to ensure the accuracy of the information contained in this publication but no liability can be accepted for any loss or damage whether direct, indirect or consequential arising out of use of the information contained herein. The services and associated benefits described within this brochure are only intended for use by authorized SKF Canada Limited distributors and their customers.

© 2008 SKF Canada Limited.

Printed in Canada
Catalogue CDN 994 / April 2008

Customer Service

Telephone: 1-866-TEAMSKF

Fax: 1-866-FAX2SKF

marketing@skf.ca

www.skf.ca

Heavy Duty Pillow Blocks

SKF Canada Limited

