MATERIAL NUMBER	ENGINEERING NUMBER	FINISHED LENGTH
120007-0487	884030P03M006	.6M +44.5 -0 [1.97" +1.75" -0]
120007-0488	884030P03M010	1.0M +55.6 -0 [3.27" +2.19" -0]
120007-0489	884030P03M020	2.0M +88.9 -0 [6.56" +3.50" -0]
120006-0051	884030P03M030	3.0M +88.9 -0 [9.84" +3.50" -0]
120007-2803	884030P03M040	4.0M +165.1 -0 [13.12" +6.50" -0]
120007-0490	884030P03M050	5.0M +165.1 -0 [16.40" +6.50" -0]

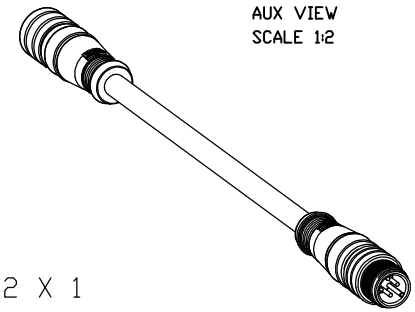

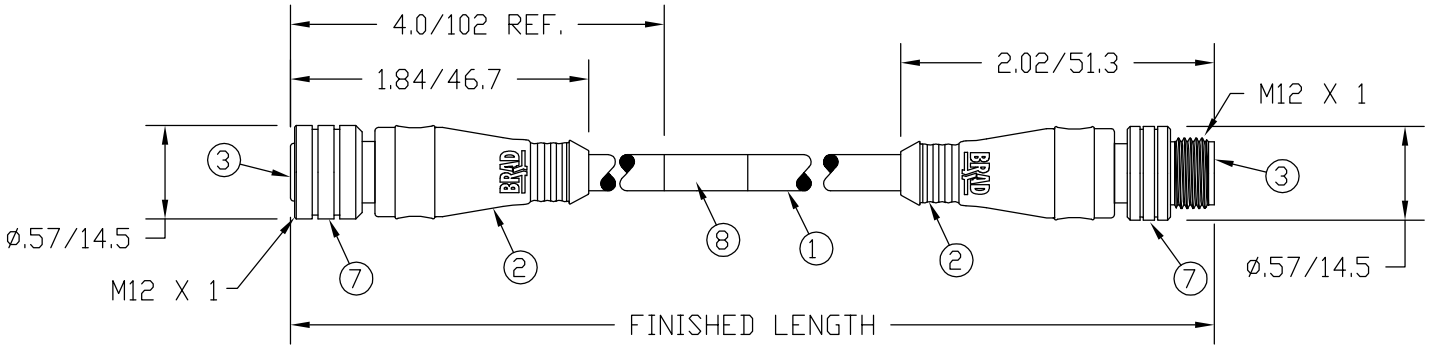

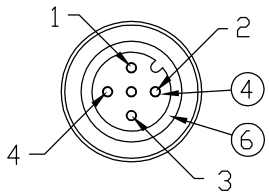

FEMALE FACE VIEW

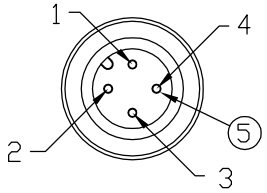

MALE FACE VIEW

NOTES:

1) MATERIALS: SEE TABLE

2) FINISHES: SEE TABLE

3) CABLE: #22/4 PUR

4) ELECTRICAL DATA:
   MAX. VOLTAGE: 250 VAC/VDC
   MAX. CURRENT 4 AMPS

5) ENVIRONMENTAL:
   PROTECTION IP67
   TEMPERATURE RANGE: -20°C TO 80°C

6) WRAP LABEL IS MARKED WITH P/N, DATE CODE, VOLTAGE & AMPERAGE.

7) ASSEMBLY IS RoHS COMPLIANT.

1	BROWN	1
2	WHITE	2
3	BLUE	3
4	BLACK	4

WIRING DIAGRAM

ITEM	QTY.	DESCRIPTION	MATERIAL	FINISH
8	1	LABEL	MYLAR	BLACK/YELLOW
7	2	COUPLER	BRASS	NICKEL PLATED
6	1	O-RING	VITON	RED
5	4	PIN CONTACT	COPPER ALLOY	GOLD OVER NICKEL
4	4	SOCKET CONTACT	COPPER ALLOY	GOLD OVER NICKEL
3	2	INSERT	PUR	BLACK
2	2	OVERMOLD	PUR	YELLOW
1	1	#22/4 CABLE	PUR JACKET	BLACK

RELEASED DRAWING
EC NO: WEU2010-0054 8/14/09
DRWN: BWOODMAN 2009/07/29
CH'KD: BWOODMAN 2009/08/21
APPR: JFMURPHY 2009/08/21

REV	DESCRIPTION
A	

QUALITY SYMBOLS
▼=0
Ⓒ=0

GENERAL TOLERANCES (UNLESS SPECIFIED)

	mm	INCH
4 PLACES	±----	±----
3 PLACES	±----	±----
2 PLACES	±----	±.01
1 PLACE	±0.3	±----
ANGULAR ±----°		

DRAFT WHERE APPLICABLE MUST REMAIN WITHIN DIMENSIONS

DIMENSION STYLE: IN/MM
SCALE: 1:1
DESIGN UNITS: INCH
THIRD ANGLE PROJECTION

DRAWN BY / DATE: BWOODMAN 2009/08/14
CHECKED BY / DATE: VOU 2009/08/14
APPROVED BY / DATE: ---- ----

TITLE: MICRO-CHANGE CORDSET 4P MA/FE SINGLE KEY #22/4 BLACK PUR CABLE

molex MOLEX INCORPORATED

MATERIAL NO.: SEE TABLE
DOCUMENT NO.: SD-120007-001
SHEET NO.: 1 OF 1
SIZE: A

THIS DRAWING CONTAINS INFORMATION THAT IS PROPRIETARY TO MOLEX INCORPORATED AND SHOULD NOT BE USED WITHOUT WRITTEN PERMISSION