E12245

Connection cable

VDOGF030MSS03,7H03DOGR030PLS

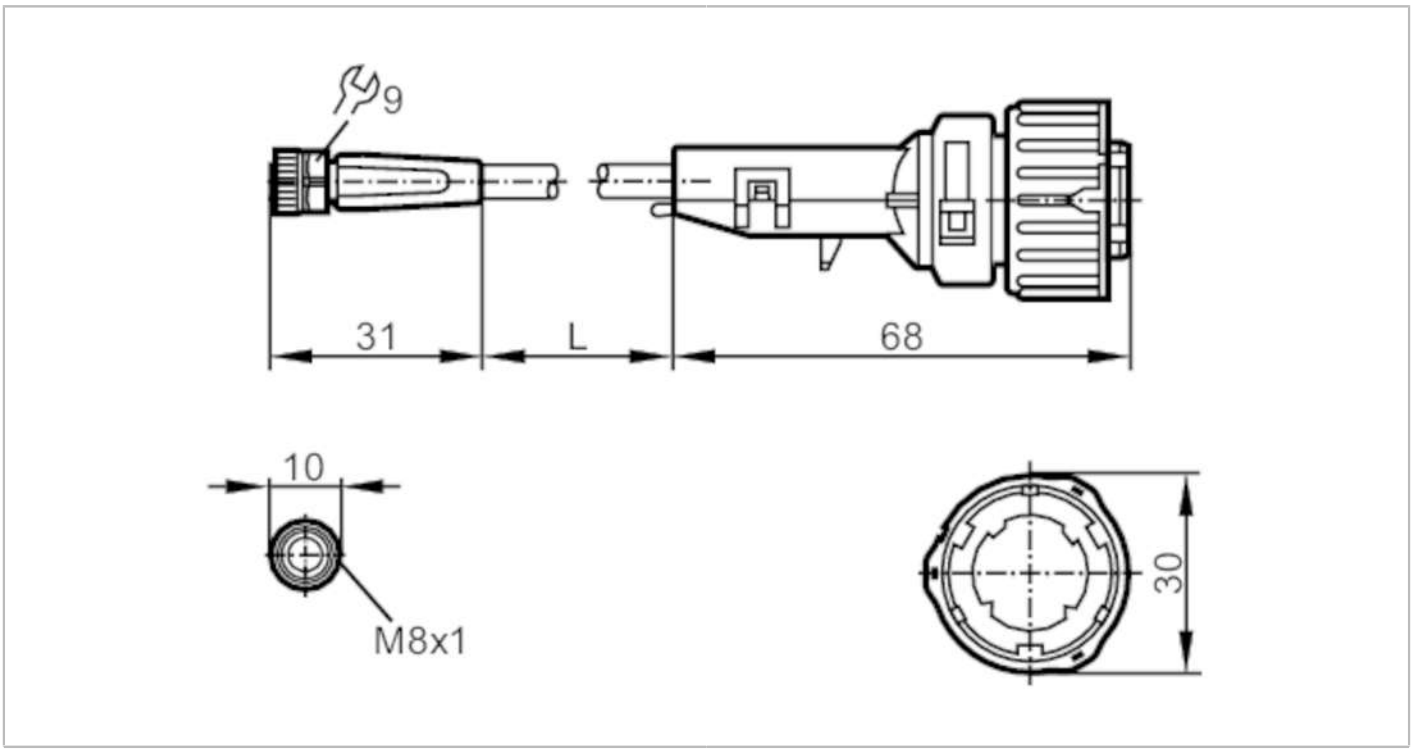

CE

Application			
Special feature		Free from silicone; Halogen-free; Gold-plated contacts; Drag chain suitability	
Free from silicone		yes	
Electrical data			
Operating voltage	[V]	9.6...30 DC	
Protection class		III	
Max. current load total	[A]	3	
Operating conditions			
Ambient temperature	[°C]	-25...85	
Protection		IP 67; IP 69K	
Mechanical data			
Weight	[g]	100.5	
Dimensions	[mm]	10 x 10 x 31	
Materials		housing: TPU orange; Sealing: FKM; housing: Hytrel G-4774 black	
Material nut		brass, nickel-plated	
Drag chain suitability		yes	
Drag chain suitability		bending radius for flexible use	min. 10 x cable diameter
		travel speed	max. 3.3 m/s for a horizontal travel length of 5 m and max. acceleration of 5 m/s²
		bending cycles	> 5 Mio.
		torsional strain	± 180 °/m
Remarks			
Pack quantity		1 pcs.	

E12245

Connection cable

VDOGF030MSS03,7H03DOGR030PLS

Electrical connection - socket

Connector: 1 x M8, straight; coding: A; Locking: brass, nickel-plated; Contacts: gold-plated; Tightening torque: 0.3...0.5 Nm

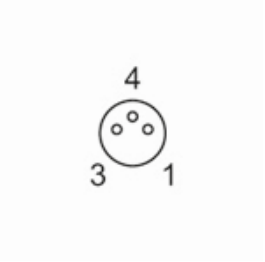

Electrical connection

Cable: 3.7 m, PUR, Halogen-free, black, Ø 3.7 mm; 3 x 0.25 mm² (32 x Ø 0.1 mm)

Connection

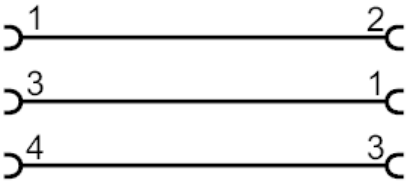

Electrical connection - socket

Connector: 1 x bayonet, straight; Locking: brass, nickel-plated; Contacts: gold-plated; Tightening torque: 0.3...0.5 Nm

