# Operating Instructions

Please keep carefully for future use

# Diaphragm-/ Piston Pressure Switch with connector Series 0184 Series 0185

GB

Installation and commissioning must be carried out in accordance with these Operating Instructions and by authorized, qualified personnel only.




SUCO Robert Scheuffele GmbH & Co. KG
Keplerstraße 12-14
74321 Bietigheim-Bissingen, Germany
Phone: + 49-7142-597-0
Fax: + 49-7142-980151
e-Mail: info@suco.de
www.suco.de


## Operation and use

The series 0184/0185 switch opens or closes an electrical circuit when a certain (adjustable) pressure is reached. A diaphragm or piston is moved by the increase in pressure. The amount of diaphragm deflection or piston travel depends on the force of the pressure applied and the (adjustable) spring tension. At a predetermined deflection of the diaphragm or movement of the piston, a microswitch is actuated which opens or closes the electrical contacts (changeover).

The pressure switch monitors a preset pressure.

## Conditions governing the use of the product

The following general instructions are to be observed at all times to ensure the correct, safe use of the pressure switch:

- Observe without fail the warning notices and other instructions laid down in the operating instructions.
- Observe the applicable safety regulations laid down by the regulatory bodies in the country of use.
- Use the switch only for monitoring fluid and gaseous medias.
- Do not exceed the specified limits for e.g. pressures, forces, moments or temperatures under any circumstances.
- Give due consideration to the prevailing ambient conditions (temperature, atmospheric humidity, atmospheric pressure, etc.).
- Never expose the pressure switch to severe side impacts or vibrations.
- Use the product only in its original condition. Do not carry out any unauthorized modifications.
- Remove all items providing protection in transit such as foils, caps or cartons.
- Disposal of the above-named materials in recycling containers is permitted.

## Operating conditions

Media temperatures other than room temperature (20 °C):

- The effects of extreme temperatures (relative to room temperature) can lead to pronounced variations in the switching point or the failure of the pressure switch.

Type of protection IP65:

Type testing does not apply to all ambient conditions without limitations. The user is responsible for verifying that the plug-and-socket connection complies with the specified rules and regulations of CE, or whether it may be used for specialized purposes other than those intended by us.

Use with oxygen:

***Diaphragm Pressure Switch:***
If oxygen is used, the applicable accident prevention regulations must be observed. In addition, we recommend a maximum operating pressure of 10 bar, which should not be exceeded.

***Piston Pressure Switch:***
Piston Pressure Switches are **not** suitable for gaseous media, particulary oxygen.

Protection against overpressure:

The static overpressure safety is included in the technical data.
The overpressure safety corresponds to the hydraulic, pneumatic part of the pressure switch. The dynamic rating of the overpressure safety is smaller than 30 to 50%.

## Technical data

| Rated operating voltage $U_e$ | Rated operating current $I_e$ | Utilization category |
|---|---|---|
| 250 Volt AC 50/60 Hz | 4 Ampere | AC 12 |
| 250 Volt AC 50/60 Hz | 1 Ampere | AC 14 |
| 30 Volt DC | 4 / 4 Ampere | DC 12 / DC 13 |
| 50 Volt DC | 2 / 1 Ampere | DC 12 / DC 13 |
| 75 Volt DC | 1 / 0.5 Ampere | DC 12 / DC 13 |
| 125 Volt DC | 0.3 / 0.2 Ampere | DC 12 / DC 13 |
| 250 Volt DC | 0.25 / 0.2 Ampere | DC 12 / DC 13 |

| | |
|---|---|
| Rated insulation voltage $U_i$ | 300 Volt |
| Rated surge capacity $U_{imp}$: | 2.5 kV |
| Rated thermal current $I_{the}$: | 5 Ampere |
| Switching overvoltage: | < 2.5 kV |
| Rated frequency: | DC und 50/60 Hz |
| Rated current of short-circuit protective decvice: | Up to 5 Ampere |
| Rated short-circuit current: | < 350 Ampere |
| IP-protection to EN 60 529:1991: | IP65 with plug |
| Tightening torque for terminal screws: | < 0.35 Nm |
| Connection size: | 0.5 to 1.5 $mm^2$ |
| Cable screw coupling: | Pg 9 |
| Connector with LED: | Pg 11 |
| Cable size: | Pg 9: 6 to 9 mm<br>Pg 11: 6 to 11 mm |
| Operating frequency: | < 200 $min^{-1}$ |
| Switching hysteresis: by the factory | 10 to 30% adjustable |
| Mechanical life<br>Diaphragm type (0184):<br><br>Piston type (0184): | $10^6$ operating cycles<br>(at a trip pressures up to 50 bar)<br>$10^6$ operating cycles |
| Body material: | Zinc-plated steel (Fe//ZnNi(12)6//A/T2) |
| Temperature range: | NBR -30 °C to +100 °C<br>EPDM -30 °C to +120 °C<br>FKM -5 °C to +120 °C |
| Overpressure safety<br>Diaphragm Pressure Switch (0184):<br><br>Piston Pressure Switch (0185): | <br>100 bar (0.3 to 1.5 bar)<br>300 bar (restidual pressure)<br>600 bar |

## Operating controls and connections

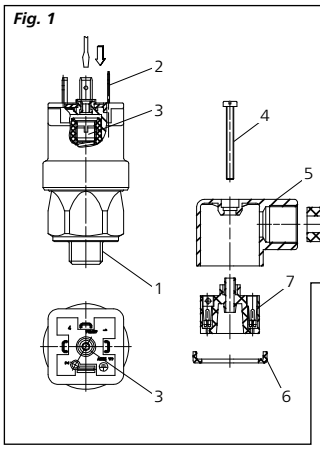


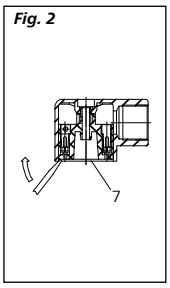


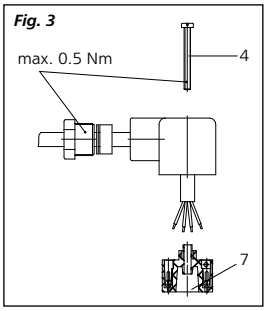


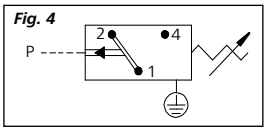


(1) Pressure connection
(2) Electrical connection
(3) Adjusting screw
(4) Fastening screw
(5) Plug housing
(6) Gasket
(7) Terminal board
(8) Pg gland

## Installation

Mechanical, pneumatic, hydraulic

With a size 27 open-ended wrench (to DIN 894 or similar), install the pressure switch, by means of the hexagon connector, in the corresponding pressure socket (for torque specification, see following table).

For sealing the system, use a standard copper gasket of the appropriate dimensions.

**Caution:** Do not secure the pressure switch by means of the plastic components under any circumstances; otherwise they may be damaged beyond further use.

| Commecting thread | Torque |
|---|---|
| M10 x 1 tap. and NPT 1/8 | Tighten until system is hermetically sealed |
| M10 x 1 cyl. | 35 Nm |
| Remaining | 45 Nm |

Electrical:

Use the connector supplied. Take care to ensure that the cable is laid in such a way that it is not:
- pinched
- kinked
- under tension.

**Connection to the connector:**

1. Remove the fastening screws (4) from the head end (set aside for later use).
2. Remove the released terminal board (7) (Fig. 2).
3. Connect the cable (max. lead cross-section 1.5 $mm^2$) to the screw terminals provided (Fig. 4).
4. Reinstall the terminal board (7) in the plug housing (5). Install the fastening screw (4). Install the connector on the pressure switch and tighten the fastening screw (4).
5. Pay attention to the following points:
   - Wiring in accordance with connection diagramm (Fig. 4)
   - Cabling laid free of pinchin, chafing, etc.
   - Torque specifications (Fig. 3)

Take care to ensure that the gasket (6) and Pg gland (8) are correctly installed, otherwise the conditions specified for protection category IP65 will not be achieved.

## Entry into service

1. Remove out the connector.
2. Using a continuity tester, wire up the electrical connections 1 and 4 (Fig. 4).

If using a testing lamp as a continuity tester, observe the maximum permissible switching capacity (see Technical Data).

3. First screw in the adjusting screw (3) as far as it will go.To adjust the pressure switch, use a screwdriver with a 2,5 mm wide blade.
4. Adjust the pressure switch to the desired switching pressure (a test pressure gauge required).

Take care to ensure that the adjusting screw (3) does not seize at any point other than when it is fully tightened down.

5. Ease off the adjusting screw (3) to a sufficient extent to cause the pressure switch to trip (continuity tester reacts).
6. If necessary, adjust the trip pressure setting by turning the adjusting screw (3).
7. Push the connector onto the pressure switch (observe the connection diagram).

Adjustment of the trip pressure setting in accordance with points 3, 4, 5 and 6 can also be carried out with the connector installed.
In this case, first remove the fastening screw (4). With a screwdriver (Bladewidth 2,5 mm), you can now reach the adjusting screw (3) through the aperture in the connector.
Now proceed in accordance with points 3, 4, 5 and 6 above.

When putting the pressure switch into service, please observe the applicable safety regulations laid down by the governing bodies in the country of use.

The adjustment of hysteresis can only be carried out in the factory. If this is unexpertly undertaken, damage may be caused to the pressure swich.

## Removing the pressure switch

When removing the pressure switch, observe the following important instructions:

- The pressurized system from which the pressure switch is intended to be removed must be entirely relieved of pressure.
- All the relevant safety regulations must be observed.
- Use a size 27 open-ended wrench (to DIN 894 or similar), to remove the pressure switch.

Do not attempt to turn the switch by means of the plastic collars, otherwise it could be damaged beyond further use.

***Continuing development sometimes necessitates specification changes without notice.***

**Key to drawings:**

Caution Note Recycling Danger

Art.-No.: 1-1-84-628-006.A 08/08