# Product data sheet
## Characteristics

# XCKP2502P16
## limit switch XCKP - steel roller plunger - 1NC +1NO - slow - M16



## Main

| | |
|---|---|
| Range of product | OsiSense XC |
| Series name | Standard format |
| Product or component type | Limit switch |
| Device short name | XCKP |
| Sensor design | Compact form C conforming to CENELEC EN 50047 |
| Body type | Fixed |
| Head type | Plunger head |
| Material | Plastic |
| Body material | Plastic |
| Head material | Zamak |
| Fixing mode | By the body |
| Movement of operating head | Linear |
| Type of operator | Spring return roller plunger metal |
| Type of approach | Lateral approach, 2 directions |
| Number of poles | 2 |
| Contacts type and composition | 1 NC + 1 NO |
| Contact operation | Slow-break, break before make |

## Complementary

| | |
|---|---|
| Switch actuation | By 30° cam |
| Electrical connection | Screw-clamp terminals, clamping capacity: 1 x 0.5...2 x 2.5 mm² |
| Cable entry | 1 entry tapped for M16 x 1.5 cable gland, cable outer diameter: 4…8 mm |
| Contacts insulation form | Zb |
| Positive opening | With |
| Positive opening minimum force | 36 N |
| Minimum force for tripping | 12 N |
| Maximum actuation speed | 0.5 m/s |
| Repeat accuracy | 0.1 mm on the tripping points with 1 million operating cycles |
| Contact code designation | A300, AC-15 (Ue = 240 V), Ie = 3 A, Ithe = 10 A conforming to EN/IEC 60947-5-1 appendix A<br>Q300, DC-13 (Ue = 250 V), Ie = 0.27 A conforming to EN/IEC 60947-5-1 appendix A |
| [Ui] rated insulation voltage | 300 V conforming to UL 508<br>500 V (pollution degree 3) conforming to IEC 60947-1<br>300 V conforming to CSA C22.2 No 14 |
| Maximum resistance across terminals | 25 MOhm conforming to IEC 60255-7 category 3 |
| [Uimp] rated impulse withstand voltage | IEC 60664 6 kV<br>IEC 60947-1 6 kV |
| Short-circuit protection | 10 A cartridge fuse, type gG |
| Electrical durability | 5000000 Cycles, DC-13, 120 V, 4 W, operating rate <60 cyc/mn, load factor: 0.5 conforming to IEC 60947-5-1 appendix C<br>5000000 Cycles, DC-13, 24 V, 10 W, operating rate <60 cyc/mn, load factor: 0.5 conforming to IEC 60947-5-1 appendix C<br>5000000 cycles, DC-13, 48 V, 7 W, operating rate <60 cyc/mn, load factor: 0.5 conforming to IEC 60947-5-1 appendix C |
| Mechanical durability | 10000000 cycles |
| Width | 31 mm |

The information provided in this documentation contains general descriptions and/or technical characteristics of the performance of the products contained herein.
This documentation is not intended as a substitute for and is not to be used for determining suitability or reliability of these products for specific user applications.
It is the duty of any such user or integrator to perform the appropriate and complete risk analysis, evaluation and testing of the products with respect to the relevant specific application or use thereof.
Neither Schneider Electric Industries SAS nor any of its affiliates or subsidiaries shall be responsible or liable for misuse of the information contained herein.

| | |
|---|---|
| Height | 65 mm |
| Depth | 30 mm |
| Net weight | 0.095 kg |
| Terminals description ISO n°1 | (13-14)NO<br>(21-22)NC |

## Environment

| | |
|---|---|
| Shock resistance | 50 gn for 11 ms conforming to IEC 60068-2-27 |
| Vibration resistance | 25 gn (f= 10…500 Hz) conforming to IEC 60068-2-6 |
| IP degree of protection | IP66 conforming to IEC 60529<br>IP67 conforming to IEC 60529 |
| IK degree of protection | IK04 conforming to EN 50102 |
| Electrical shock protection class | Class II conforming to IEC 61140<br>Class II conforming to NF C 20-030 |
| Ambient air temperature for operation | -25…70 °C |
| Ambient air temperature for storage | -40…70 °C |
| Protective treatment | TC |
| Product certifications | UL<br>CSA<br>CCC |
| Standards | UL 508<br>EN 60947-5-1<br>IEC 60947-5-1<br>IEC 60204-1<br>EN 60204-1<br>CSA C22.2 No 14 |

## Packing Units

| | |
|---|---|
| Package 1 Weight | 80 g |

## Offer Sustainability

| | |
|---|---|
| Sustainable offer status | Green Premium product |
| EU RoHS Directive | Pro-active compliance (Product out of EU RoHS legal scope) EU RoHS Declaration |
| Mercury free | Yes |
| RoHS exemption information | Yes |
| Environmental Disclosure | Product Environmental Profile |
| Circularity Profile | End Of Life Information |

## Contractual warranty

| | |
|---|---|
| Warranty | 18 months |

## Dimensions

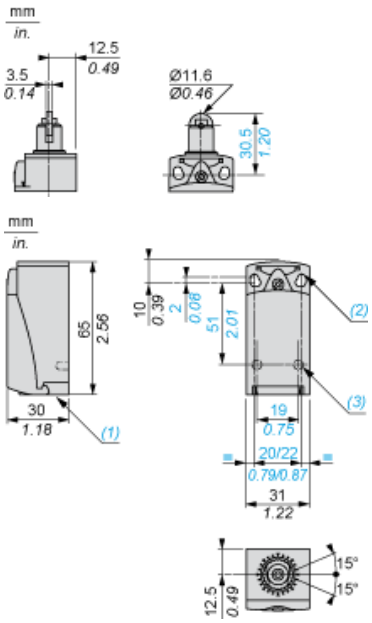


(1) Tapped entry for M16 x 1.5
(2) 2 elongated holes Ø 4.3 x 6.3 mm on 22 mm centres, 2 holes Ø 4.3 on 20 mm centres.
(3) 2 x Ø 3 holes for support studs, depth 4 mm.

## Mounting with Cable Entry

### Position of Cable Gland

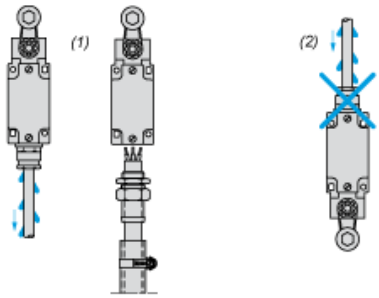


(1) Recommended
(2) To be avoided

## Setting-up

### Plunger or Multi-directional Heads

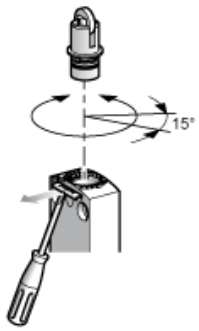

## Wiring Diagram

### 2-pole NC + NO Break before Make, Slow Break



## Characteristics of Actuation

### Switch Actuation by 30° Cam

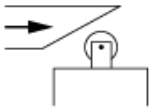

## Functionnal Diagram

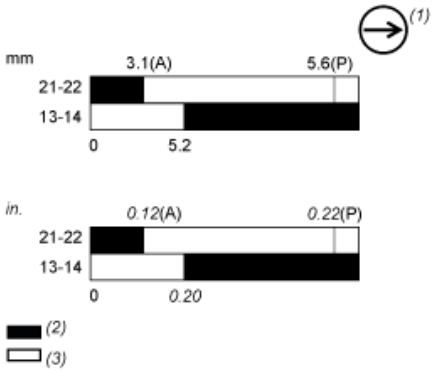


(P) Positive opening point
(A) Cam displacement
(1) NC contact with positive opening operation
(2) Closed
(3) Open