AUTOMATIC ANTI-VACUUM VALVES
Specification Sheet

Reliance WATER CONTROLS
The Safety Valve Specialist

Features and Benefits

- **Gives automatic protection against a vacuum forming in hot water installation**
- **Solid brass body for long life**
- **Easy access to the internals from the top of the valve**
- **Quick and simple to service**





WRAS APPROVED PRODUCT

Description

A compact range of Anti-Vacuum Valves for use with hot water heaters to prevent a vacuum forming in installations where there is the potential for the draw off rate to exceed the rate of flow to the inlet; this can occur in properties with multiple outlets below the base of the hot water heater. The valves contain a check cartridge which, under normal conditions, is held closed by the system pressure, but when a vacuum condition arises the suction will cause the check cartridge to open and air to flow through, equalising the pressure within the hot water heater.

AUTOMATIC ANTI-VACUUM VALVES
Specification Sheet

Reliance WATER CONTROLS
The Safety Valve Specialist

Specifications

Maximum working pressure	16bar
Maximum Temperature:	
ADMT 503 001	99°C
ADMT 503 010, 004, 005	60°C
Opening Pressure	0.05bar

Approvals

WRAS 1106038

Product Codes

ADMT 503 001	½"MBSP Automatic Anti-Vacuum Valve
ADMT 503 010	¾"MBSP Automatic Anti-Vacuum Valve
ADMT 503 004	15mm Automatic Anti-Vacuum Valve
ADMT 503 005	22mm Automatic Anti-Vacuum Valve

Typical Installation

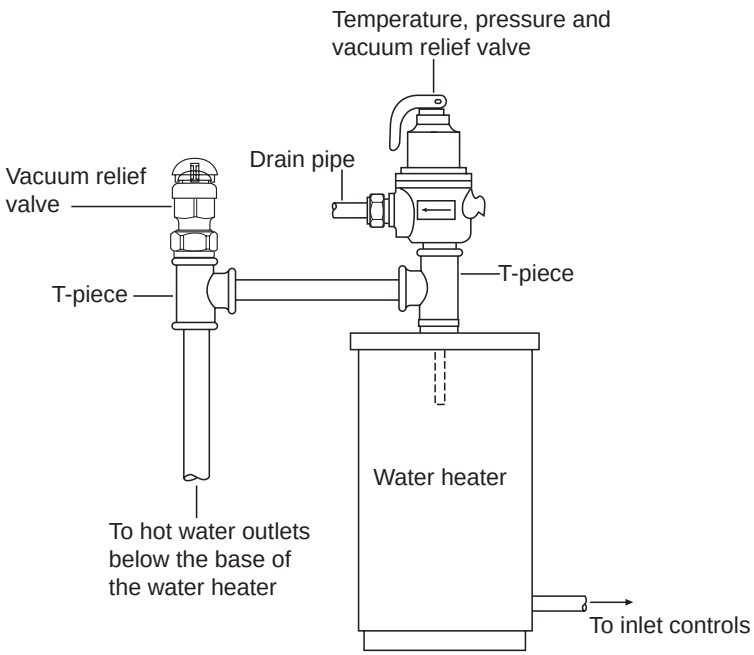

Dimensions

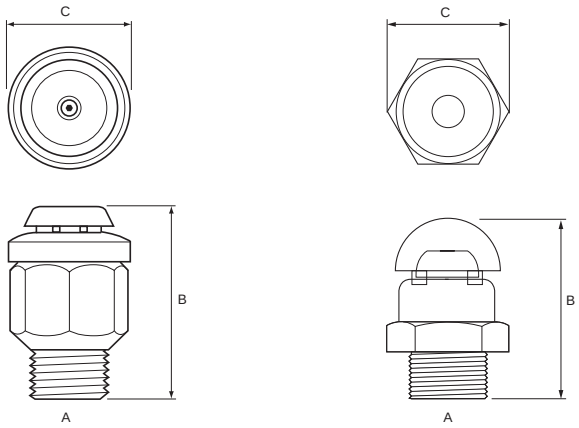

ADMT 503 001 ADMT 503 010

Product Code	A	B	C
ADMT 503 001	½" MBSP	49	32
ADMT 503 010	¾" MBSP	45	34

All dimensions shown in mm unless otherwise stated

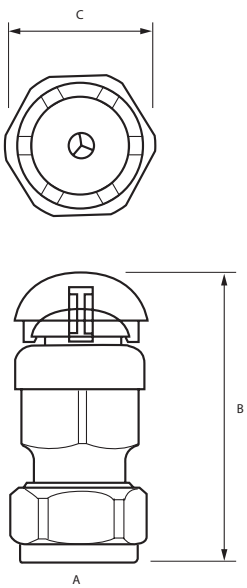

Product Code	A	B	C
ADMT 503 004	15mm	46	28
ADMT 503 005	22mm	49	36

All dimensions shown in mm unless otherwise stated

Reliance Water Controls Ltd
A Reliance Worldwide Company

Worcester Road, Evesham, Worcestershire, WR11 4RA, UK. UK – Freephone: 0800 389 5931
Freefax: 0800 389 5932 Outside UK – Tel: +44 (0)1386 712400 Fax: +44 (0)1386 712401 Email: sales@rwc.co.uk
www.rwc.co.uk

Reliance reserves the right to make changes to the product and the information contained in this leaflet at any time. ADMT503-003-04/11 P2 © Reliance Water Controls Ltd 2011