E30148

Protective cap

PROTECTIVE CAP

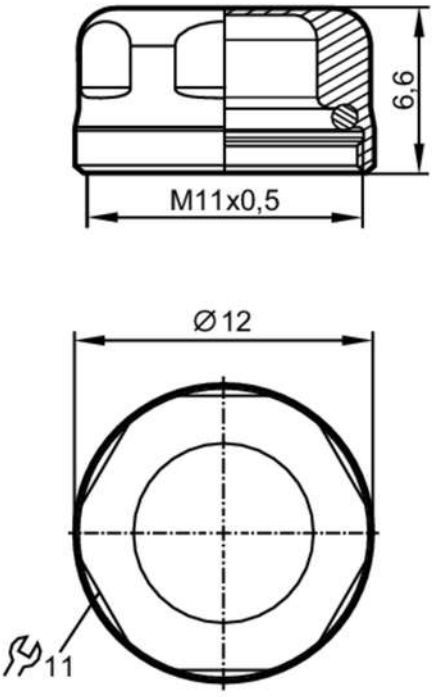

Mechanical data		
Weight	[g]	10
Materials		stainless steel (1.4404 / 316L)
Tightening torque	[Nm]	2.5...3.5; (recommended tightening torque)
Remarks		
Pack quantity		1 pcs.