G1G108-AB17-02

EC centrifugal fan

forward curved, single inlet

with housing (flange)



ebm-papst Mulfingen GmbH & Co. KG
Bachmühle 2
D-74673 Mulfingen
Phone: +49(0)7938/81-0
Fax: +49(0)7938/81-110
info1@de.ebmpapst.com
www.ebmpapst.com

Nominal data

Type	**G1G108-AB17-02**
Motor	**M1G055-BD**

Nominal voltage	[VDC]	24
Nominal voltage range	[VDC]	16 .. 28
Frequency	[Hz]	-
Type of data definition		rfa
Speed	[min^{-1}]	3000
Power input	[W]	42
Current draw	[A]	2.0
Min. ambient temperature	[°C]	- 25
Max. ambient temperature	[°C]	+60

ml = max. load · me = max. efficiency · rfa = running at free air · cs = customer specs · cu = customer unit
Subject to alterations

EC centrifugal fan

forward curved, single inlet

with housing (flange)

Technical features

General description	Integrated electronics
Size	108 mm
Operation mode	S1
Direction of rotation	Clockwise, seen on rotor
Mounting position	Any
EMC interference emission	Acc. to EN 61000-6-3 (household environment)
EMC interference immunity	Acc. to EN 61000-6-2 (industrial environment)
Insulation class	"B"
Cable exit	Axial
Condensate discharge holes	None
Bearing motor	Ball bearing
Mass	1.4 kg
Material of electronics housing	Die-cast aluminium
Housing material	Die-cast aluminium
Material of impeller	Sheet steel, hot-galvanised
Motor protection	Reverse polarity and locked-rotor protection
Product conforming to standard	EN 60950-1
Surface of rotor	Coated in black
Type of protection	IP 22
Technical features	- Tach output - Motor current limit - Soft start - Control input 0-10 VDC / PWM
Max. permissible ambient motor temp. (transp./ storage)	+ 80 °C
Min. permissible ambient motor temp. (transp./storage)	- 40 °C
Approval	CSA C22.2 Nr.77; UL 1004-1

ebm-papst Mulfingen GmbH & Co. KG · Bachmühle 2 · D-74673 Mulfingen · Phone: +49(0)7938/81-0 · Fax: +49(0)7938/81-110 · info1@de.ebmpapst.com · www.ebmpapst.com

EC centrifugal fan

forward curved, single inlet

with housing (flange)

Product drawing

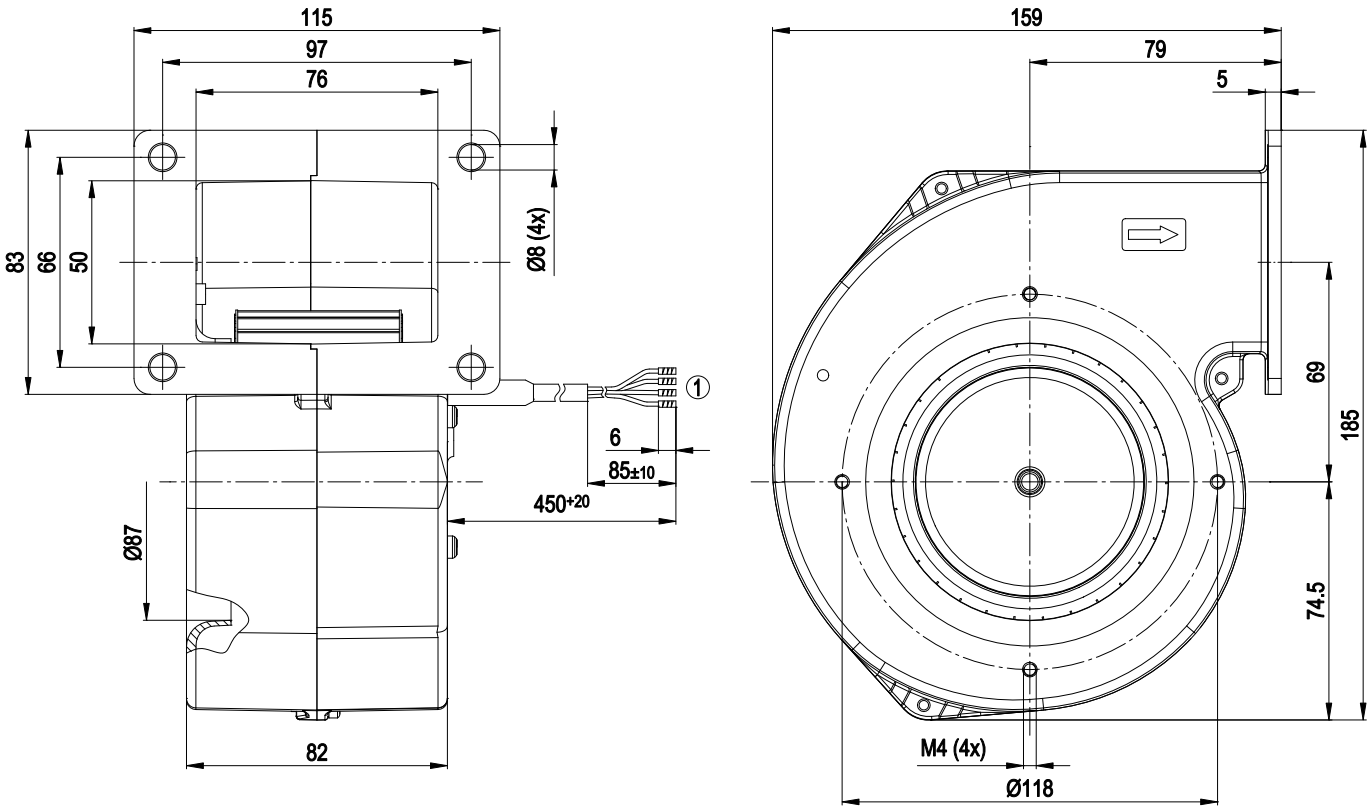

1	Connection line PVC AWG20, 4 x brass lead tips crimped

ebm-papst Mulfingen GmbH & Co. KG · Bachmühle 2 · D-74673 Mulfingen · Phone: +49(0)7938/81-0 · Fax: +49(0)7938/81-110 · info1@de.ebmpapst.com · www.ebmpapst.com

EC centrifugal fan

forward curved, single inlet

with housing (flange)

Connection screen

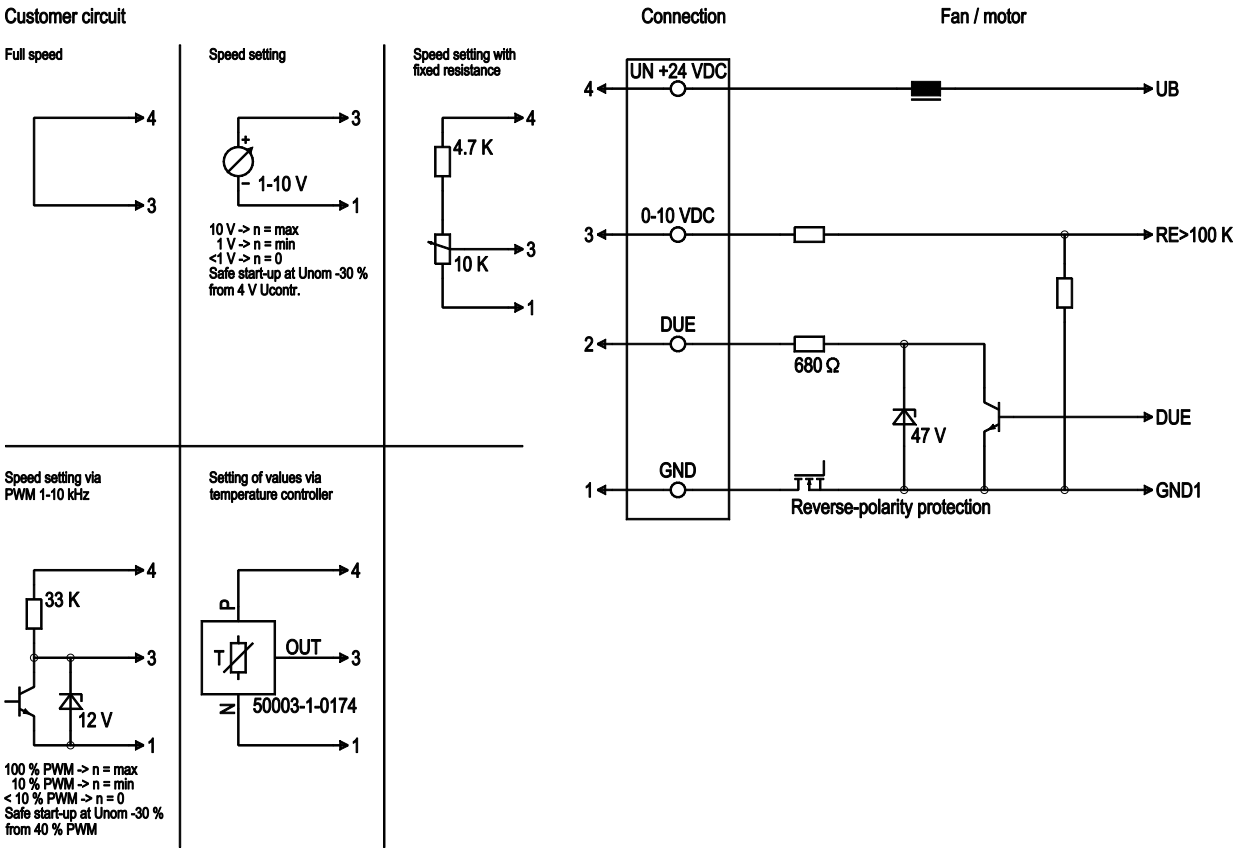

Line	No.	Signal	Colour	Function / assignment
1	1	GND	blue	Reference mass
1	2	DUE	white	Speed monitoring output, 2 pulses per rotation, Isink max = 10 mA
1	3	0-10 VDC	yellow	Control input Re > 100 K
1	4	Un +24 VDC	red	Power supply 24 VDC, residual ripple 3.5 %

ebm-papst Mulfingen GmbH & Co. KG · Bachmühle 2 · D-74673 Mulfingen · Phone: +49(0)7938/81-0 · Fax: +49(0)7938/81-110 · info1@de.ebmpapst.com · www.ebmpapst.com

EC centrifugal fan

forward curved, single inlet

with housing (flange)

Charts: Air flow

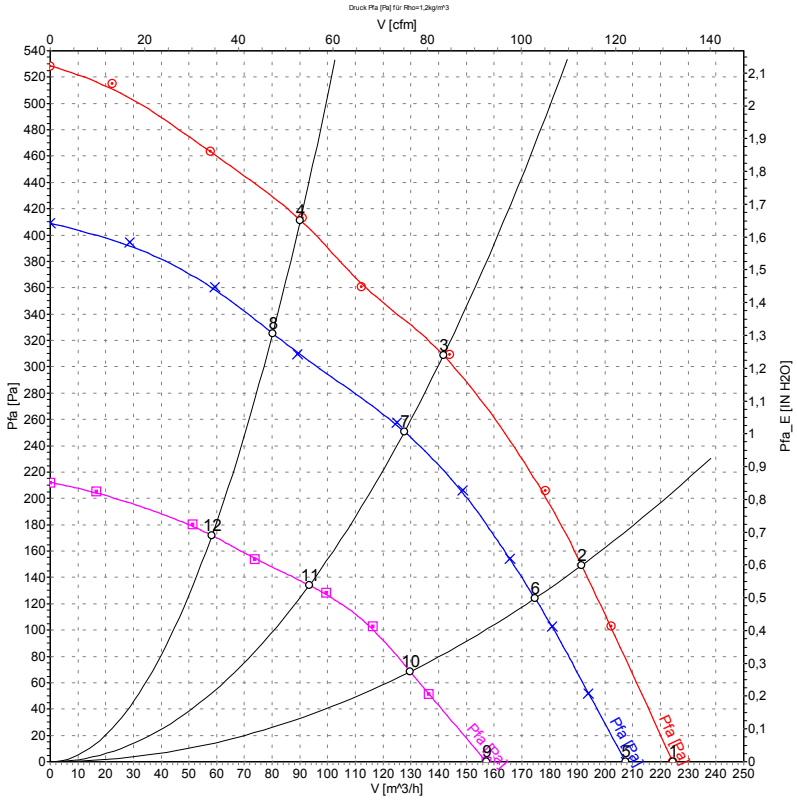

Measurement: LU-47851
Measurement: LU-47850
Measurement: LU-47852

Measured values

	U	n	P_1	I	$\dot{V}$	p_{fa}
	[V]	[min^{-1}]	[W]	[A]	[m^3/h]	[Pa]
1	28	3235	55	2.26	225	0
2	28	3480	51	2.06	190	149
3	28	3800	44	1.76	140	313
4	28	4055	38	1.49	90	414
5	24	3000	42	2.00	205	0
6	24	3170	39	1.80	175	125
7	24	3415	33	1.50	130	250
8	24	3625	28	1.28	80	325
9	16	2290	19	1.33	155	0
10	16	2400	17	1.19	130	68
11	16	2540	14	1.00	95	134
12	16	2670	12	0.88	60	172

ebm-papst Mulfingen GmbH & Co. KG · Bachmühle 2 · D-74673 Mulfingen · Phone: +49(0)7938/81-0 · Fax: +49(0)7938/81-110 · info1@de.ebmpapst.com · www.ebmpapst.com