lumbergautomation
A BELDEN BRAND



Product: RK 50-04

7/8" Power Single-Ended Cordset: Female, straight, 5-pin(4+PE), orange body, 230 V AC/DC, 9 A; PVC orange cable, 0.50 mm²

Product Description

7/8" Power Single-Ended Cordset: Female, straight, 5-pin(4+PE), orange body, 230 V AC/DC, 9 A; PVC orange cable, 0.50 mm²

Technical Drawing

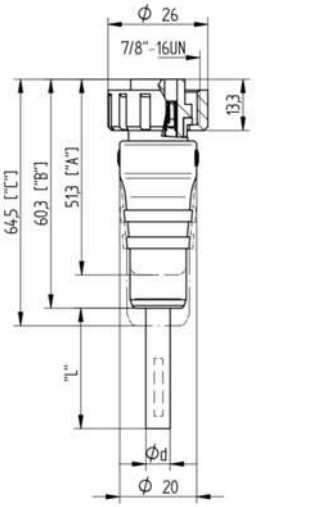

"A"	"B"	"C"
≤ Ø 5	Ø 5 < d ≤ Ø 10,5	> Ø 7,5...< Ø 14

Typ/ type	Kontaktbelegung contact assignment	
	Polzahl/ number of poles	Farbkennung/ colour code
RK 20		1 = braun / brown 2 = blau / blue
RK 30		1 = braun / brown 2 = gelb-grün / yellow-green 3 = braun / brown
RK 40		1 = braun / brown 2 = weiß / white 3 = blau / blue 4 = schwarz / black
RK 50		1 = schwarz / black 2 = blau / blue 3 = gelb-grün / yellow-green 4 = braun / brown 5 = weiß / white

Technical Specifications

Technical Data

Product Family:	Power Connector
Product Sub Family:	7/8" Circular Connectors
Brand:	Lumberg Automation
Connector Type:	Cordset, single ended
Type of Contact / Gender:	female
Connector Design:	straight

Number of Pins:	5(4+PE)
Shielding:	Unshielded
Attachment Type:	Coupling Nut
Rated Voltage:	250 V AC/DC
Operating Voltage:	230 V AC/DC
Rated Current:	9 A
Contact Resistance:	≤ 10 mOhm
Insulation Resistance:	> 10^9 Ohm
Ambient Temperature (Operation):	-40 °C to +90 °C
Protection Degree / IP Rating:	IP68 (2h at 10 bar)
Pollution Degree:	3 acc. to DIN EN 60664-1 (VDE 0110-1)

Materials

Contact Base Material:	CuZn
Contact Plating:	Cu/Au
Contact Bearer Material:	TPU
Contact Bearer Color:	orange
Molded Body Material:	TPU
Molded Body Color:	orange
Attachment Material:	PA, black

Cable Data

Cable Number:	04
Number of Wires:	5
Minimal Bending Radius (Fixed Inst):	> 5 x D
Minimal Bending Radius (Flexible Inst):	> 10 x D
Conductor material:	Cu
Cable Jacket Material:	PVC
Cable Jacket Color:	orange
Cable Diameter D:	ø 6.80 ±0.20 mm
Wire Insulation Material:	PVC
Insulated Wire Diameter:	ø 1.80 mm
Ambient Temperature (Fixed Installation):	- 40 °C to +90 °C
Ambient Temperature (Flex Installation):	+ 5 °C to +90 °C
UL Cable Type:	AWM: 2654
Flammability Class (Cable Jacket):	DIN EN 60332-1-2, VDE 0482-332-1-2, IEC 60332-1-2, UL VW-1; flame-retardant and self-extinguishing

Safety & Environmental Compliance

RoHS Compliant:	yes

Notes

Protection Degree / IP Rating Note:	* only if mounted and locked in combination with Hirschmann / Lumberg connector.
Note Derating:	* Notice derating
Note:	Do not connect / disconnect under load.

Variants

Item #	Item Description	Cable Length
11179	RK 50-04/2 M	2 m
11180	RK 50-04/5 M	5 m
12870	RK 50-04/10 M	10 m
12875	RK 50-04/12 M	12 m
87104	RK 50-04/15 M	15 m

© 2019 Belden, Inc

All Rights Reserved.

Although Belden makes every reasonable effort to ensure their accuracy at the time of this publication, information and specifications described here in are subject to error or omission and to change without notice, and the listing of such information and specifications does not ensure product availability.

Belden provides the information and specifications herein on an "ASIS" basis, with no representations or warranties, whether express, statutory or implied. In no event will Belden be liable for any damages (including consequential, indirect, incidental, special, punitive, or exemplary damages) whatsoever, even if Belden has been advised of the possibility of such damages, whether in an action under contract, negligence or any other theory, arising out of or in connection with the use, or inability to use, the information or specifications described herein.

All sales of Belden products are subject to Belden's standard terms and conditions of sale.

Belden believes this product to be in compliance with all applicable environmental programs as listed in the data sheet. The information provided is correct to the best of Belden's knowledge, information and belief at the date of its publication. This information is designed only as a general guide for the safe handling, storage, and any other operation of the product itself or the one that it becomes a part of. The Product Disclosure is not to be considered a warranty or quality specification. Regulatory information is for guidance purposes only. Product users are responsible for determining the applicability of legislation and regulations based on their individual usage of the product.