Rope pull switch
Series SR

Description **SR-U2Z-NA-QF-300-L0-0-0** Article number **6011629069**

Operating symbol

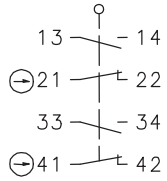

Operating diagram

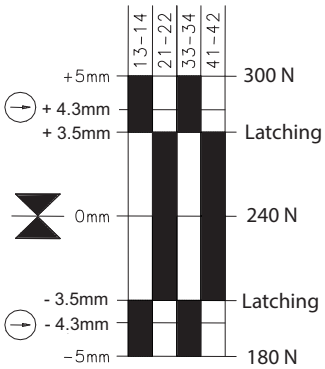

On Off

Tolerance:
Operating point ± 0,5 mm
Actuating force ± 15 %

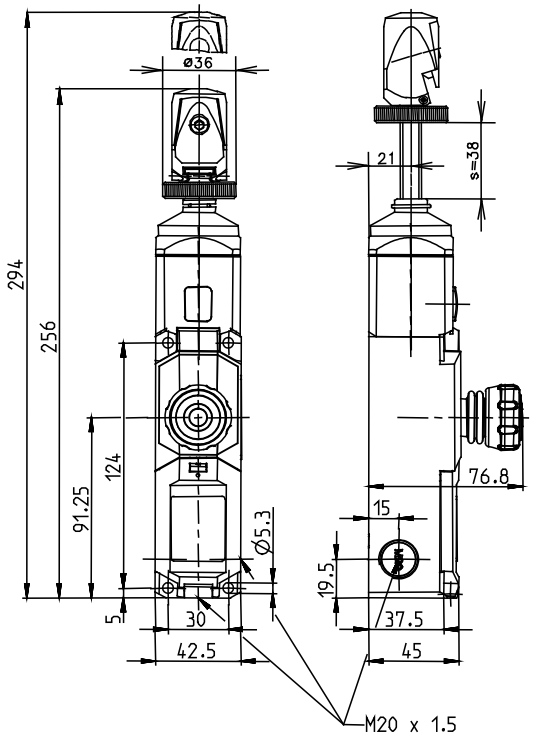

Electrical data		
Rated insulation voltage	U_i	250 V AC
Rated impulse withstand voltage	U_{imp}	2,5 KV
Conv. thermal current	I_{the}	10 A
Rated operational voltage	U_e	240 V
Utilization category		AC-15, Ue /Ie 240 V / 3 A
Direct opening action	⊖	acc. to IEC/EN 60947-5-1, Annex K
Short-circuit protective device		Fuse 6 A gG
Protection class		II, totally insulated

Mechanical data	
Enclosure	PA 6 GV (UL94-V0)
Cover	PA 6 GV (UL94-V0)
Actuator	zinc die casting / steel
Latching device	acc. to IEC 60947-5-5, DIN EN 60947-5-5, ISO 13850 (DIN EN 418)
Reset facility	pull red/blue RESET - button
Emergency-stop	PA 6 GV (UL94-V0) (push red button)
Ambient air temperature	-25 °C ... +70 °C
Contact type	2 NC, 2 NO (Zb)
Mechanical life	acc. IEC 60947-5-5, max. 1 x 10^5 switching cycles
Rope length	≤ 75 m
Rope Ø	D = Ø 2 - 5 mm
Switching frequency	≤ 20 / min.
Assembly	4 x M5
Connection	8 x cage clamp max. 1,5 mm^2 flex
Cable entrance	3 x M20 x1,5
Weight	≈ 0,69 kg
Installation position	operator definable
Protection type	IP67 acc. to IEC/EN 60529

ID for safety engineering	
B10d	1 x 10^5 switching cycles

Standards	
	VDE 0660 T100, DIN EN 60947-1, IEC 60947-1
	VDE 0660 T200, DIN EN 60947-5-1, IEC 60947-5-1
	VDE 0660 T210, DIN EN 60947-5-5, IEC 60947-5-5
	DIN EN ISO 13849-1
	ISO 13850

EU Conformity	
	acc. to directive 2006/42/EC

Approvals	
	DGUV
	$_{c}CSA_{US}$ A300 (same polarity)
	CCC

Notes
The degree of protection (IP code) specified applies solely to a property closed cover and the use of an equivalent cable gland with adequate cable.