53111000	DATA SHEET	LAPP
Valid from: 24.01.2025	SKINTOP® ST-M / STR-M	

The polyamide based SKINTOP® ST-M / STR-M is designed for universal use, above all for functional safety in manufacturing of machines and equipment, in measurement and control technology and automation technology, as well as in the electronic technology and in manufacturing of robots.



Components:

Gland body	Polyamide, V-2 acc. to UL 94
Cap nut	Polyamide, V-2 acc. to UL 94
Sealing ring	CR (ozone- and UV-resistant)
O-Ring (M40x1.5 - M63x1,5)	NBR (ozone- and UV-resistant)

Technical features:

Connecting thread	M12x1.5 up to M63x1.5 acc. to EN 60423
Functional thread	Multi-start trapezoidal thread
Protection class IP / NEMA Enclosure types	IP66, IP68 (5 bar/30 min), IP69 acc. to EN 60529 Liquid tight and cord grip acc. to UL514B, CSA C22.2 No.18.3-12 Type 1 and Type 12 acc. to UL 50 E, CSA C22.2 No. 94.2-15
Strain relief:	Kat. A acc. to DIN EN 62444
Temperature range:	Dynamic -20 °C up to +100 °C Statically -40 °C up to +100 °C
Glow wire test	650°C acc. to DIN EN 62444
Design	ST-M standard STR-M with reducing sealing ring (for smaller cable diameters)
Colour	RAL 7001 silver-grey RAL 7035 light-grey RAL 9005 black, UV-resistant

Other characteristics:

Permanent vibration protection
Optimal strain relief
Large variable clamping ranges
M40 - M63 with O-ring

Approvals:

File Nr. 79903 (Test in acc. to UL514B)

Norm references:

We reserve all rights according to DIN ISO 16016.

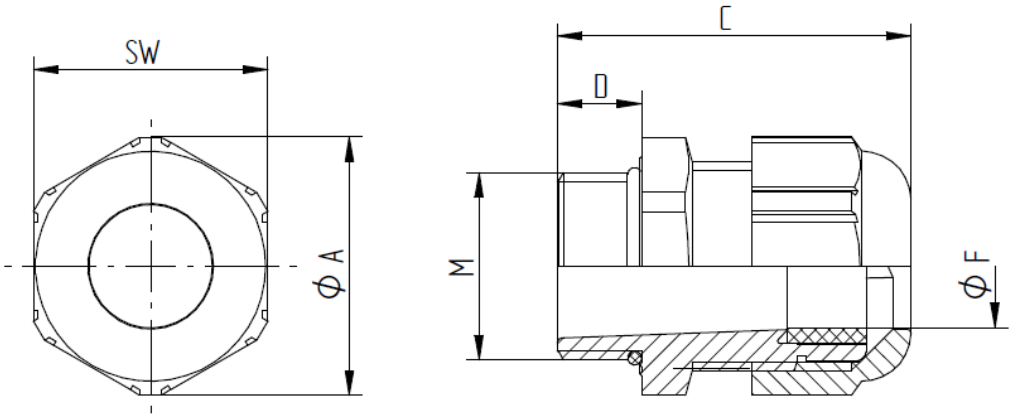

SKINTOP® ST-M

M	SW [mm]	Ø A [mm]	C [mm]		D [mm]	Ø F [mm] Clamping range	O-Ring [mm]	Article No.		
			min.	max.				RAL 7001	RAL 7035	RAL 9005
M12x1,5	15	16,6	26,5	30	8	3,5 - 7	-	53111000	53111400	53111200
M16x1,5	19	21,1	29	34	8	4 - 10	-	53111010	53111410	53111210
M20x1,5	25	27,6	34	37	9	6 - 13	-	53111020	53111420	53111220
M25x1,5	30	33,6	35	40	10	8 - 17	-	53111030	53111430	53111230
M32x1,5	36	40,3	39	47	10	9 - 21	-	53111040	53111440	53111240
M40x1,5	46	51,6	43	52	10	16 - 28	36 x 2	53111050	53111450	53111250
M50x1,5	55	61,6	54	62	12	27 - 34	46 x 2	53111060	53111460	53111260
M63x1,5	66	73,9	59	71	12	34 - 45	57 x 2	53111070	53111470	53111270

SKINTOP® STR-M

M	SW [mm]	Ø A [mm]	C [mm]		D [mm]	Ø F [mm] Clamping range	O-Ring [mm]	Article No.		
			min.	max.				RAL 7001	RAL 7035	RAL 9005
M12x1,5	15	16,6	26,5	30	8	2 - 5	-	53111100	53111500	53111300
M16x1,5	19	21,1	29	34	8	3,5 - 7	-	53111110	53111510	53111310
M20x1,5	25	27,6	34	37	9	4 - 10	-	53111120	53111520	53111320
M25x1,5	30	33,6	35	40	10	5 - 13	-	53111130	53111530	53111330
M32x1,5	36	40,3	39	47	10	6 - 15	-	53111140	53111540	53111340
M40x1,5	46	51,6	43	52	10	9 - 23	36 x 2	53111150	53111550	53111350
M50x1,5	55	61,6	54	62	12	24 - 29	46 x 2	53111160	53111560	53111360
M63x1,5	66	73,9	59	71	12	28 - 39	57 x 2	53111170	5311 1570	53111370

For more information, please see our current catalogue. Please do not hesitate to contact our laboratory if there are any questions regarding resistance against aggressive agents and special oil.

We reserve all rights according to DIN ISO 16016.