OJ5011

Through-beam sensor transmitter

OJS-OOKG/FO

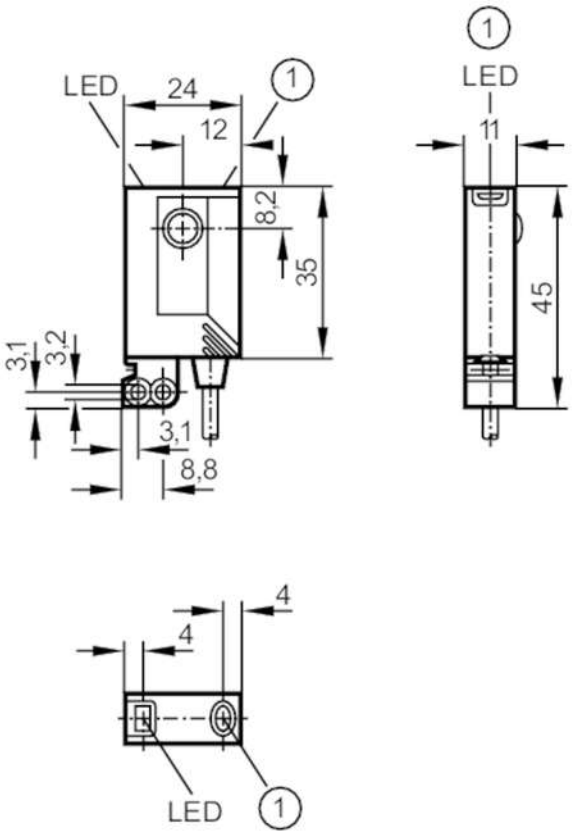

1 pushbutton without function

Product characteristics		
Type of light		red light
Housing		rectangular
Application		
Function principle		Through-beam sensor
Electrical data		
Operating voltage	[V]	10...30 DC
Current consumption	[mA]	< 19
Protection class		III
Reverse polarity protection		yes
Type of light		red light
Wave length	[nm]	660
Outputs		
Overload protection		yes
Detection zone		
Transmitter / receiver		transmitter
Range	[m]	< 10
Max. light spot diameter	[mm]	1000

OJ5011

Through-beam sensor transmitter

OJS-OOKG/FO

Light spot dimensions refer to		at maximum range	
Operating conditions			
Ambient temperature	[°C]	-25...60	
Protection		IP 67	
Tests / approvals			
EMC		EN 60947-5-2	
MTTF	[years]	1773	
Mechanical data			
Weight	[g]	71.5	
Housing		rectangular	
Dimensions	[mm]	35 x 24 x 11	
Materials		housing: ABS; fixture: diecast zinc; LED window: SEPS; pushbutton: SEPS	
Lens material		glass	
Lens alignment		front lens	
Displays / operating elements			
Display		operation	1 x LED, green
Accessories			
Items supplied		Basic clip: 1, E20964	
		screws: 2 x M3 x 16	
		spring washers: 2	
		Nuts: 2	
Remarks			
Remarks		operating voltage "supply class 2" according to cULus	
Pack quantity		1 pcs.	
Electrical connection			

Cable: 2 m, PVC; 2 x 0.14 mm²

Connection

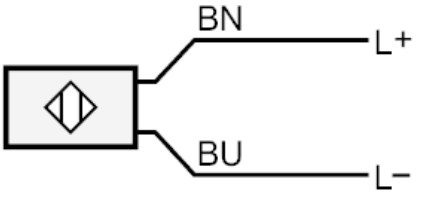

	Core colours :
BN =	brown
BU =	blue