Traffic Lights / Accessories

Fixing bow 4 tier w.accessories GY



Part No.: 975.890.37

MECHANICAL DATA	
Height	48 mm
Diameter	35 mm
Materials	PC/ABS
Housing colour	Grey
Protection category	IP65
Weight with packaging	216 g
Product weight	211 g

APPROVAL DATA	
WEEE	No
Conforms with RED directive	No
Conforms with ATEX-directive	No
Conforms with CCC	No
Conforms with UL	No
Conforms with FCC	No
Conforms with IC	No
EAC certificate available	No
Conforms with AS-I	No
ICAO Certification	No
Conforms with DNV	No
Conforms with RoHS CN	No

! For additional installation and mounting information, refer to the appropriate user guide at www.werma.com. This printed copy is for information only and is subject to alteration.

Traffic Lights / Accessories

Fixing bow 4 tier w.accessories GY

DRAWING

	A	B
975.890.33	93	190
975.890.34	251,2	348,2
975.890.35	409,4	506,4
975.890.37	567,6	664,6

	A	B
975.890.33	245	338
975.890.34	403,2	496,2
975.890.35	561,4	654,4
975.890.37	719,6	812,6

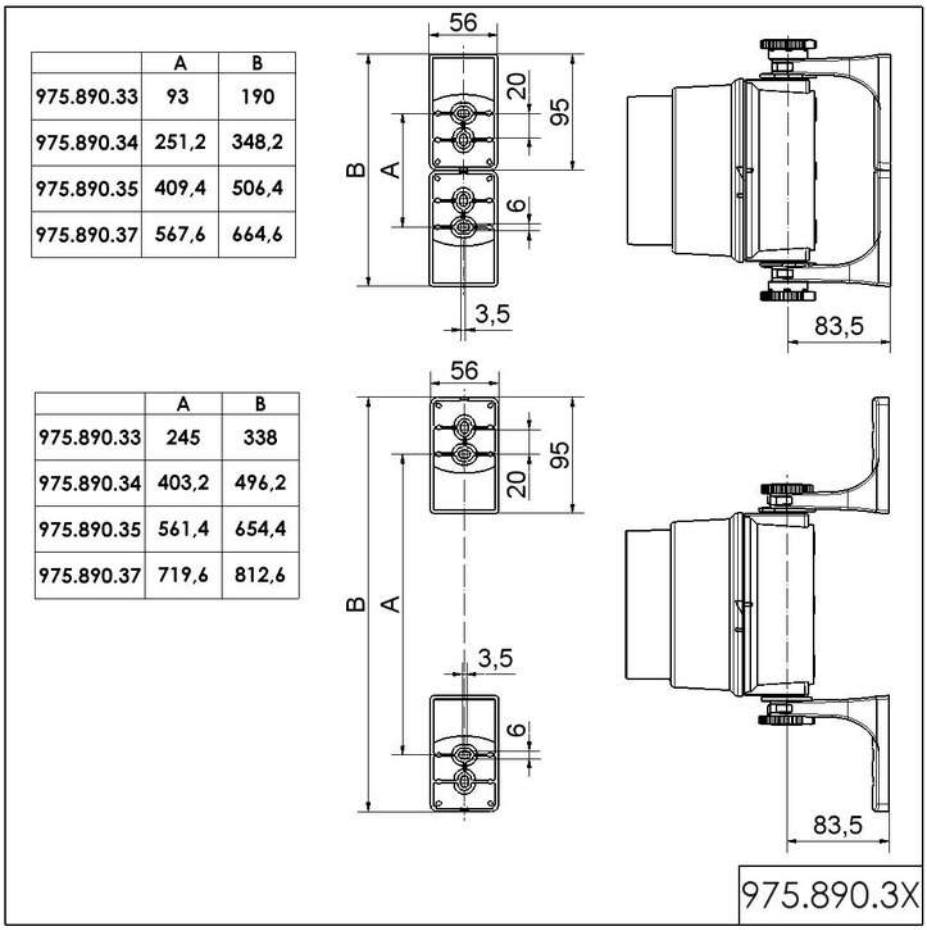

! For additional installation and mounting information, refer to the appropriate user guide at www.werma.com. This printed copy is for information only and is subject to alteration.