Permanent Light 800 / Accessories

Base for surface mounting BK



Part No.:	975.812.02

MECHANICAL DATA	
Height	34 mm
Diameter	70 mm
Materials	PA-GF
Housing colour	Black
Weight with packaging	35 g
Product weight	35 g

APPROVAL DATA	
WEEE	No
Conforms with RED directive	No
Conform with ATEX-directive	No
Conforms with CCC	No
Conforms with UL	No
Conforms with FCC	No
Conforms with IC	No
EAC certificate available	No
Conforms with AS-I	No
ICAO Certification	No
Conforms with GL	No
Conforms with RoHS CN	No

! For additional installation and mounting information, refer to the appropriate user guide at www.werma.com. This printed copy is for information only and is subject to alteration.

Permanent Light 800 / Accessories

Base for surface mounting BK

DRAWING

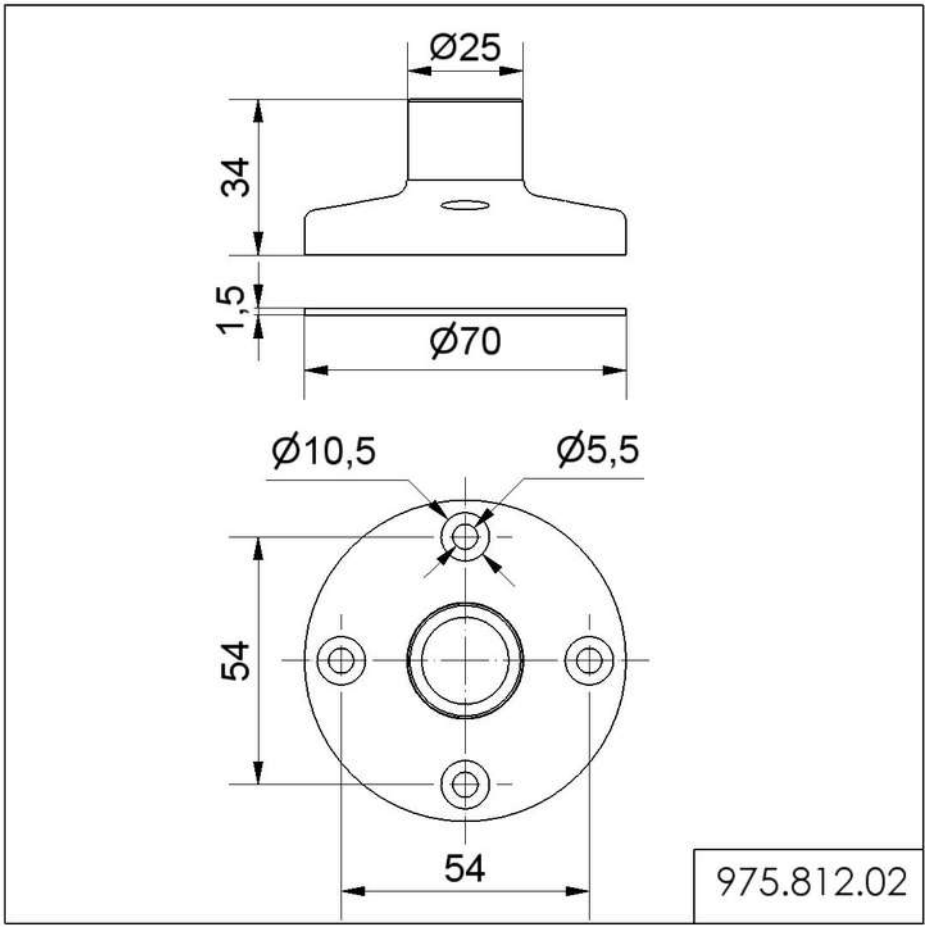

! For additional installation and mounting information, refer to the appropriate user guide at www.werma.com. This printed copy is for information only and is subject to alteration.