INSTRUCTION MANUAL
IS-mB1 Minialite
Intrinsically Safe Round LED Beacon



The IS-mB1 beacon is CE marked for compliance with the European Explosive 2014/34/EU and the European EMC Directive 2014/30/EU

1. INTRODUCTION
The IS-mB1 is an ATEX and IECEx certified intrinsically safe beacon which will produce a visual warning in a hazardous area. Red, Amber, Green and Blue output models are available.

2. DESCRIPTION
The device will start to flash when power is applied to terminals + and -. The beacon has two flash rates one double flash per second and two double flashes per second. The flash rate is selected by setting an internal pin header. The unit is factory set to produce two double flashes per second.

3. SUPPLY VOLTAGE
The IS-mB1 beacon has been designed to operate in a hazardous area via 28V 300 ohm ATEX and IECEx certified Zener Barriers or Galvanic Isolators. The beacon may be tested or used in safe areas without a Zener Barrier or Galvanic Isolator, but at supply voltages above 16V the internal current limit will function and the brightness may be reduced. The beacon should not be continuously operated without a barrier or isolator with a supply voltage greater than 16V.

4. INTRINSIC SAFETY CERTIFICATION

4.1 ATEX certificate
The IS-mB1 beacon complies with the following standards:-

EN IEC 60079-0:2018
EN60079-11:2012
IEC60079-26:2014

II 1G Ex ia IIC T4 Ga (-40ºC <= Ta <= +60ºC)

The EC-Type Examination Certificate SIRA 04ATEX2084X has been issued by the Notified Body Sira. This confirms compliance with the European ATEX Directive 94/9/EC for Group II, Category 1G equipment. The beacon carries the Community Mark and subject to local codes of practice, may be installed in any of the EEA member countries.

This instruction sheet describes installations which conform to EN60079:Part14:2008 Electrical Installation in Hazardous Areas. When designing systems for installation outside the UK, the local Code of Practice should be consulted.

1) The certification marking is as follows:

IS-mB1 Beacon
II 1G Ex ia IIC T4 Ga (-40ºC <=Ta<= +60°C)
Ui = 28V Ii = 660mA Pi = 1.2W Ci = 0 Li = 0
SIRA 05ATEX2084X CE 2813
Year / Serial No. 09 / 1MBR000001
WARNING: TO AVOID A POSSIBLE ELECTROSTATIC CHARGE ONLY CLEAN WITH A DAMP CLOTH
e2S european safety systems ltd. London W3 7QH UK www.e2s.com

2) The equipment may be used in zones 0, 1 and 2 with flammable gases and vapours with apparatus groups IIA, IIB & IIC and with temperature classes T1, T2, T3 and T4.
3) The equipment is only certified for use in ambient temperatures in the range -40ºC to +60ºC and should not be used outside this range.
4) The certificate number has an 'X' suffix, which indicates that the certificate contains one of more special conditions for safe use. Those installing or inspecting the equipment should refer to this section of the certificate.
5) The equipment has not been assessed as a safety-related device (as referred to by Directive 94/9/EC Annex II, clause 1.5).
6) Installation of this equipment shall be carried out by suitably-trained personnel in accordance with the applicable code of practice.
7) Repair of this equipment shall only be carried out by the manufacturer or in accordance with the applicable code of practice.
8) The certification of this equipment relies on the following materials used in its construction:

Enclosure:	ABS Plastic
Lens:	Polycarbonate

If the equipment is likely to come into contact with aggressive substances, then it is the responsibility of the user to take suitable precautions that prevent it from being adversely affected, thus ensuring that the type of protection is not compromised.

"Aggressive substances" - e.g. acidic liquids or gases that may attack metals, or solvents that may affect polymeric materials.

"Suitable precautions" - e.g. regular checks as part of routine inspections or establishing from the material's data sheet that it is resistant to specific chemicals.

SPECIAL CONDITIONS FOR SAFE USE (as stated in the EC Type Examination Certificate SIRA 05ATEX2084X)

Conditions for IS-mBI Beacon

The equipment has an ingress protection rating of IP65. However, if it has been supplied without cable entry devices, then the user shall ensure that the devices that are fitted will provide an ingress protection that is appropriate to the environment in which it is installed i.e. IP20 or better. If only one of the two cable entries are used, then the unused entry 'knockout' shall be left intact or fitted with a blanking device that ensures ingress protection appropriate to the environment in which it is installed i.e. IP20 or better.

The enclosure is non-conducting and may generate an ignition-capable level of electrosatic charges under certain extreme conditions. The user should ensure that the equipment is not installed in a location where it may be subjected to external conditions that might cause a build-up of electrostatic charges on non-conducting surfaces, additionally, cleaning of the equipment should be done only with a damp cloth.

4.2 Zones, Gas Groups and T Rating
The IS-mB1 LED beacon has been certified Ex ia IIC T4 Ga. When connected to an approved system it may be installed in:

Zone 0	explosive gas air mixture continuously present.
Zone 1	explosive gas air mixture likely to occur in normal operation.
Zone 2	explosive gas air mixture not likely to occur, and if it does, it will only exist for a short time.

Be used with gases in groups:

Group	A	propane
Group	B	ethylene
Group	C	hydrogen

Having a temperature classification of:

T1	450ºC
T2	300ºC
T3	200ºC
T4	135ºC

4.3 Terminals + and - power supply
Power is supplied to the beacon via terminals + and - which have maximum input safety parameters of:

Ui	=	28V
Ii	=	660mA
Pi	=	1.2W

Ci = 0 Li = 0

IS-mB1 beacons may be powered from ATEX certified Zener barriers or galvanic isolators certified by an EC Approved Body which have output parameters equal to or less than 28V, 660mA and 1,2W

Up to three IS-mB1 beacons can be connected in parallel and be powered from a common barrier or isolator. Parallel connection of beacons will significantly reduce the brightness of each device.

The maximum permitted cable parameters defined by the barrier or isolator certificate must not be exceeded.

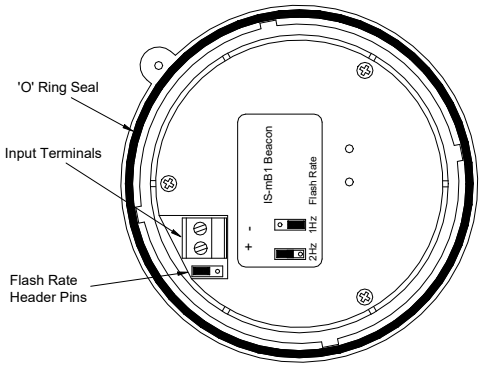

Fig 1 Location of field terminals and controls.

5. INSTALLATION
In addition to the certification requirements shown in section 4.2, the environmental conditions must be within the limits shown on the product specification. The beacon enclosure provides IP65 protection and is suitable for installation in an exterior location if an appropriate sealed cable entry is used. IS-mB1 beacons should only be installed by trained competent personnel.

5.1 Mounting
The IS-mB1 minialite beacon may be secured to any flat surface by inserting two mounting screws through the back of the round base (see figure 2). The enclosure provides IP65 protection and is suitable for installation in exterior locations provided that the area around the two mounting screws through the back of the base moulding has been sealed and that suitable cable glands with the required IP rating have been used. The lens should be aimed towards the area where maximum visibility is required.

5.2 Installation procedure

a. Unscrew the beacon unit security screw and remove the beacon section from the base by turning it anti-clockwise. Ensure that the 'O' ring seal remains in place.

b. Remove the required 20mm knockout section(s) depending on system wiring and mount the base to a flat surface by inserting two screws through the back of the base.

c. Fit the required number of 20mm cable glands or conduit entries into the base and connect the field wiring to the appropriate beacon terminals as shown in section 6 and Fig 1 of this manual.

d. Check that the 'O' ring seal is correctly located on the beacon section (see Fig. 1) and insert the beacon section into the base. Push it fully home and turn it clockwise to align the mouldings before tightening the security screw.

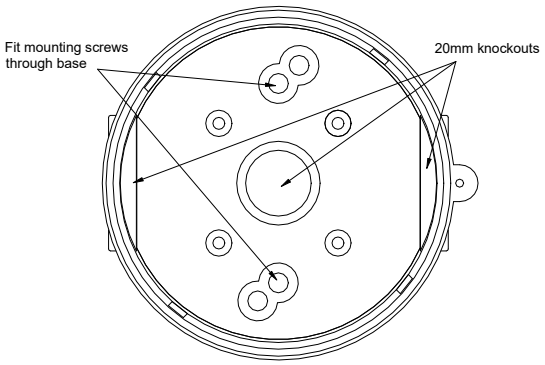

Fig 2 Mounting Beacon Base.

6. ELECTRICAL SYSTEM DESIGN FOR INSTALLATION IN HAZARDOUS AREAS USING ZENER BARRIERS

If the beacon is controlled by a switch in the positive supply, or the power supply is being turned on and off, only a single channel Zener barrier is required as shown in Fig 3. This circuit may also be used if the beacon is being controlled by a mechanically activated switch on the hazardous area side of the barrier. The power supply voltage should be between 20V and the maximum working voltage of the barrier. The circuit will continue to work at lower voltages, but the beacon light output level will be reduced.

If the beacon is being operated from a lower voltage power supply of say 12V or less, then a 15V 100 ohm barrier can be used which will improve the beacon light output levels at lower voltages.

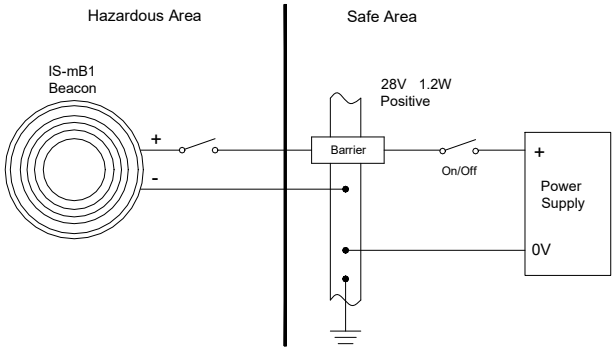

Fig 3 Using a single channel barrier.

If the beacon control switch is in the negative wire and the power supply 0V is earthed, the circuit shown in Fig 4 may be used. For simplicity the two barriers may be combined into one package. The power supply voltage should be between 21V and the maximum working voltage of the 28V barrier. The circuit will continue to work at lower voltages, but the beacon brilliance will be reduced.

7. ELECTRICAL SYSTEM DESIGN FOR INSTALLATION IN HAZARDOUS AREAS USING GALVANIC ISOLATORS.

Galvanic isolators do not require a high integrity earth connection. For small systems where a high integrity earth is not already available, the use of galvanic isolators often reduces the overall installation cost and simplifies design.

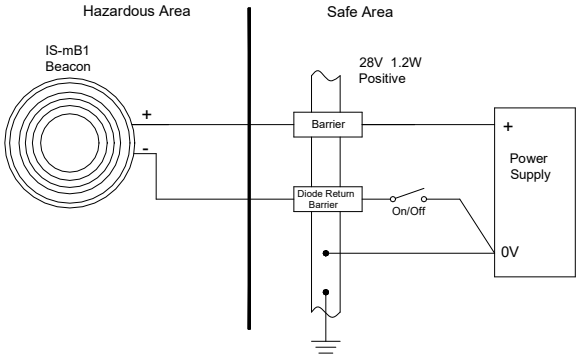

Fig 4 Single stage alarm using two channel barrier.

The IS-mB1 minialight beacon may be powered by any galvanic isolator having output parameters within the limits specified in section 4.3, which has been certified Ex ia by an EC Notified Body. The beacon may be controlled by turning the galvanic isolator on and off, or by a mechanically activated switch on the hazardous area side of the isolator.

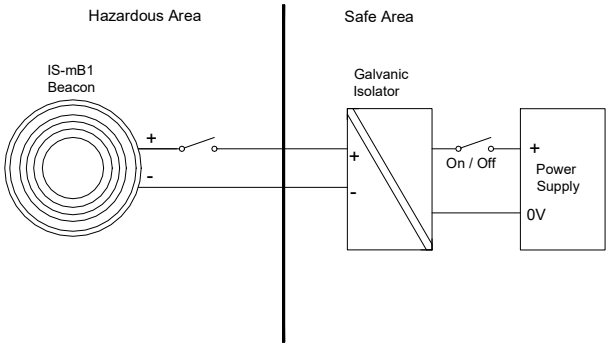

Fig 5 Basic circuit for use with a galvanic isolator.

The control arrangement will vary depending upon the isolator chosen. The galvanic isolator must be able to supply an output of 30mA at about 16V.

10. CABLE PARAMETERS

The maximum permitted cable parameters are as specified on the certificate of the Zener barrier or galvanic isolator that has been selected for the installation. Normally the limits are not restrictive, but care should be taken not to exceed a capacitive limit of 83nF for IIC installations when very long cables are used.

11. BEACON FLASH RATE

The IS-mB1 can be set to two flash rates 1 double flash per second 1Hz (slow rate) or two double flashes per second 2Hz fast rate).

The flash rate is selected by the position of the pin header next to the input terminal block (see fig 1).

12. MAINTENANCE

The beacon should be regularly inspected to ensure that it has not been damaged. Frequency of inspection depends upon environmental conditions, but initially we recommend that this should be done annually.

No attempt should be made to repair a faulty IS-mB1 beacon. Suspect beacons must be returned to European Safety Systems Ltd. or to your local agent for repair.

13. GUARANTEE
Beacons which fail within the guarantee period should be returned to European Safety Systems Ltd. or our local agent. It is helpful if a brief description of the fault symptoms is provided.

14. CUSTOMER COMMENTS
European Safety Systems Ltd. are always pleased to receive comments from customers about our products and services. All communications are acknowledged and whenever possible, suggestions are implemented.

IECEx Approval

The IS-mB1 Beacon has also been approved to the IECEx scheme.

The installation requirements for IS-mB1 beacons approved to the IECEx scheme are the same as the installation requirements for IS-mB1 beacons approved to the ATEX directive.

Certificate No. IECEx SIR 06.0045X

Marking: Ex ia IIC T4 Ga (Ta = -40ºC to +60ºC)

Standards: IEC 60079-0:2017
IEC 60079-11:2011
IEC 60079-26:2014-10

CONDITIONS OF CERTIFICATION (as stated on the IECEx Certificate of Conformity IECEx SIR 06.0045X)

- The equipment has an ingress protection rating of IP65. However, if it has been supplied without a cable entry device, then the user shall ensure that the devices that are fitted will provide an ingress protection that is appropriate to the environment in which it is installed i.e. IP20 on better. If only one of the two cable entries are used, then the unused entry 'knockout' shall be left intact or fitted with a blanking device that ensues ingress protection appropriate to the environment in which it is installed i.e. IP20 or better.

- The enclosure is non-conducting and may generate an ignition-capable level of electrosatic charges under certain extreme conditions. The user should ensure that the equipment is not installed in a location where it may be subjected to external conditions that might cause a build-up of electrostatic charges on non-conducting surfaces, additionally, cleaning of the equipment should be done only with a damp cloth.

The IS-mB1 beacons are marked with the certification requirements for the ATEX and IECEx and approvals.

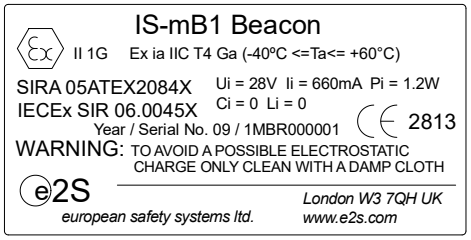

FM Approval

The IS-mB1 Beacon has also been FM Listed.

Marking: IS Class I, Zone 0, AEx ia IIC T4

IS Class I, Division 1, Groups A, B, C, D

See the Control Drawings D 5036 Sheets 1 and 2 for installation details and entity parameters.

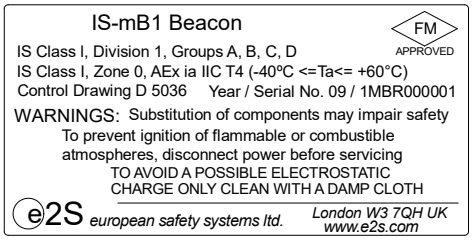

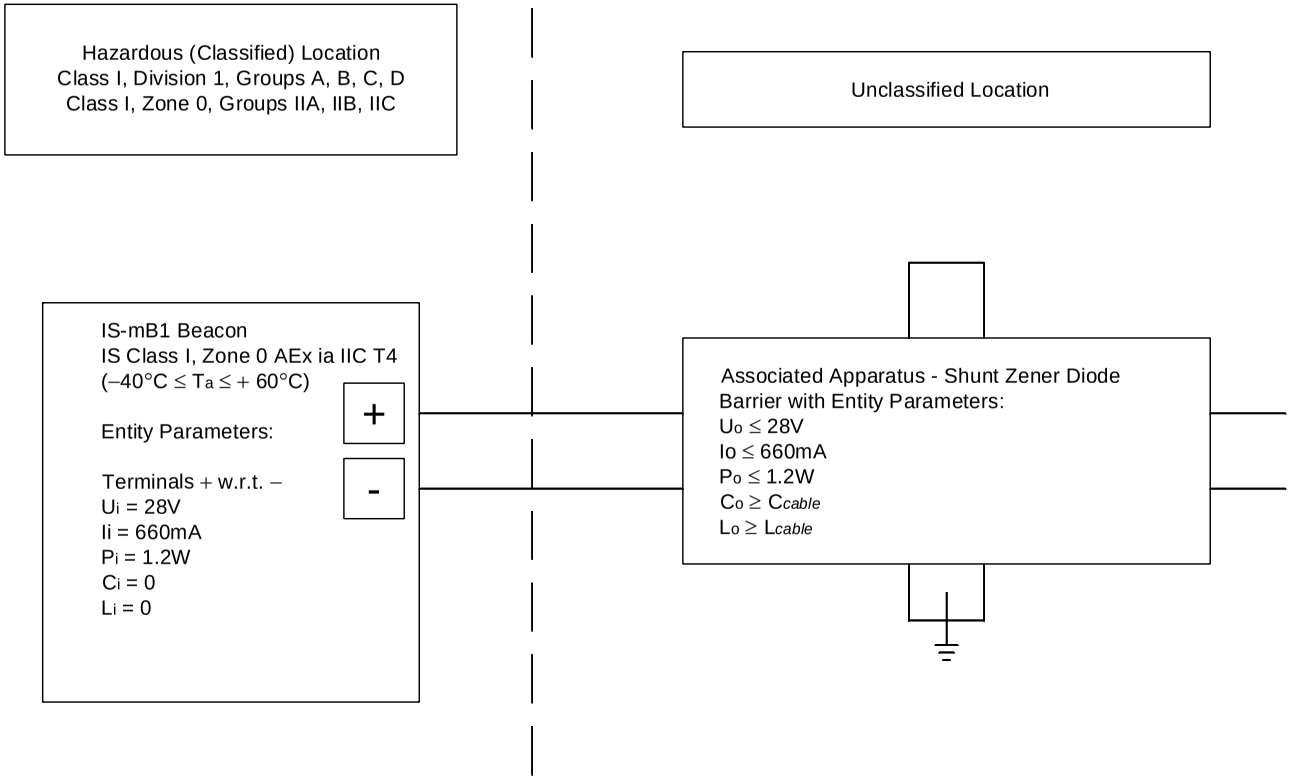

1. No revision to drawing without prior FM approval.

2. The associated apparatus must be FM approved.

3. The associated apparatus manufacturer's installation drawing must be followed when installing this equipment.

4. Installation should be in accordance with ANSI/ISA RP12.06.01 "Installation of Intrinsically Safe Systems for Hazardous (Classified) Locations" and the National Electrical Code (ANSI/NFPA 70).

5. The resistance between the intrinsically safe ground and the earth ground must be less the 1 ohm.

6. The Shunt Zener Diode Barrier must be a FM approved, resistively limited, single channel barrier having parameters less than, or equal to, those quoted, and for which the output is non-ignition capable for the Class, Division or Zone and Group of use.

7. The IS-mB1 Beacon enclosure has an ingress protection rating of IP 65. If supplied without cable entry devices then metallic or plastic cable glands, or conduit hubs, shall be fitted that provide the required environmental protection.

8. To prevent ignition of flammable or combustible atmospheres, disconnect power before servicing.

9. Substitution of components may impair safety.

Note:
CAUTION - Bonding between conduit connections is not automatic and must be provided as part of this installation.

SCHEDULE DRAWING

No modification permitted without reference to the "Notified Body"

A	MRS	02-08-06		
Issue:	Appd.	Date:	Drawn: MRS	Date: 21-04-06

Title

IS-mB1 Beacon
Control Drawing for shunt zener diode barrier.

e2S warning signals
European Safety Systems Ltd.
Impress House
Mansell Road
Acton
London W3 7QH

Drawing No. D 5036 Sheet 1 of 2

Computer Ref. D5036a.dwg

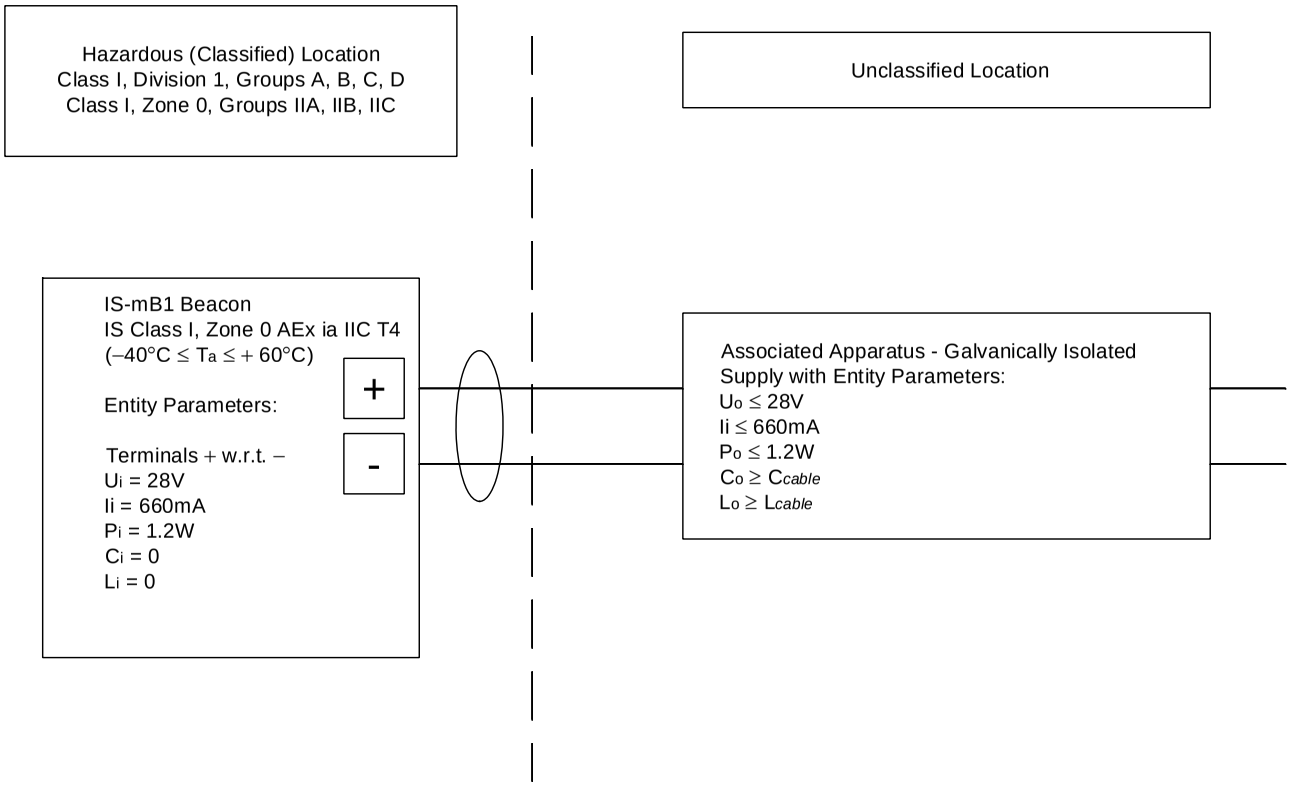

1. No revision to drawing without prior FM approval.

2. The associated apparatus must be FM approved.

3. The associated apparatus manufacturer's installation drawing must be followed when installing this equipment.

4. Installation should be in accordance with ANSI/ISA RP12.06.01 "Installation of Intrinsically Safe Systems for Hazardous (Classified) Locations" and the National Electrical Code (ANSI/NFPA 70).

5. The Galvanically Isolated Supply must be a FM approved, resistively limited, single channel supply having parameters less than, or equal to, those quoted, and for which the output is non-ignition capable for the Class, Division or Zone and Group of use.

6. The IS-mB1 Beacon enclosure has an ingress protection rating of IP 65. If supplied without cable entry devices then metallic or plastic cable glands, or conduit hubs, shall be fitted that provide the required environmental protection.

7. To prevent ignition of flammable or combustible atmospheres, disconnect power before servicing.

8. Substitution of components may impair safety.

Note:
CAUTION - Bonding between conduit connections is not automatic and must be provided as part of this installation.

SCHEDULE DRAWING

No modification permitted without reference to the "Notified Body"

A	MRS	02-08-06		
Issue:	Appd.	Date:	Drawn: MRS	Date: 21-04-06

Title

IS-mB1 Beacon
Control Drawing for galvanically isolated supply.

e2S warning signals
European Safety Systems Ltd.
Impress House
Mansell Road
Acton
London W3 7QH

Drawing No. Computer Ref. D5036b.dwg

D 5036 Sheet 2 of 2