

Image may differ from product. See technical specification for details.

305608 B

Double row angular contact ball bearing with wide and two-piece inner ring and relubrication feature

Double row angular contact ball bearing, with wide and two-piece inner ring and relubrication feature, correspond to a pair of single row angular contact ball bearings in a back-to-back arrangement. The two-piece inner ring enables incorporation of more balls,

resulting in higher load carrying capacity. The annular lubrication groove and holes in the outer ring facilitates relubication.

- Wide, two-piece inner ring
- Accommodate very high axial loads in both directions, radial loads, and tilting moments
- Relubrication feature
- Suitable where a stiff bearing arrangement is required

Overview

Dimensions

Bore diameter	160 mm
Outside diameter	215 mm
Width	56 mm
Contact angle	40 °

Performance

Basic dynamic load rating	135 kN
Basic static load rating	220 kN
Reference speed	2 800 r/min
Limiting speed	3 000 r/min

Properties

Contact type	Normal contact (two-point contact)
Number of rows	2
Locating feature, bearing outer ring	None
Ring type	Two-piece inner ring and one-piece outer ring
Cage	Machined metal
Arrangement of contact angle (double-row bearing)	Back-to-back (O)
Matched arrangement	No
Universal matching bearing	No
Axial internal clearance	NSTD
Material, bearing	Bearing steel
Coating	Without
Sealing	Without
Lubricant	None
Relubrication feature	With

Logistics

Product net weight	5.44 kg
eClass code	23-05-08-03
UNSPSC code	31171531

Technical specification

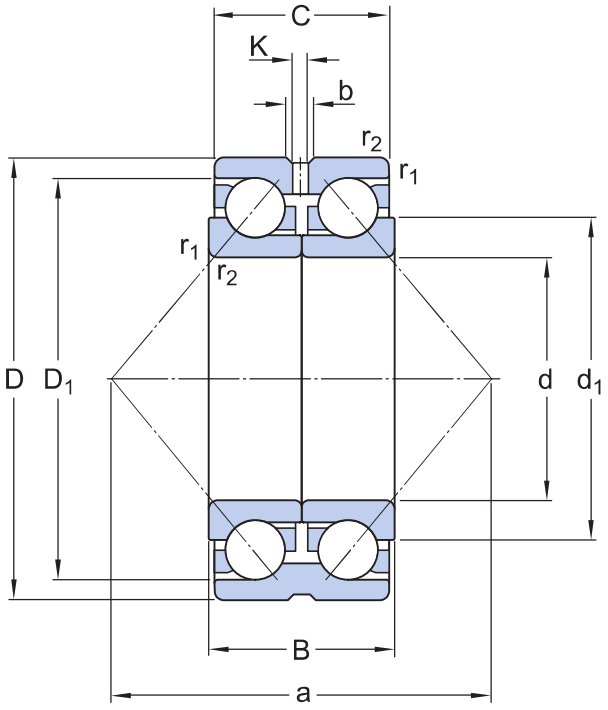

Dimensions

d	160 mm	Bore diameter
D	215 mm	Outside diameter
B	56 mm	Width
C	50 mm	Width outer ring
d_1	≈ 181 mm	Shoulder diameter inner ring for two-piece inner ring
D_1	≈ 203.1 mm	Shoulder diameter outer ring
b	8.5 mm	Width annular lubrication groove at outer ring
K	4.5 mm	Diameter lubrication hole (outer ring)
$r_{1,2}$	min. 2 mm	Chamfer dimension inner ring for two-piece inner ring
a	185 mm	Distance pressure point(s)

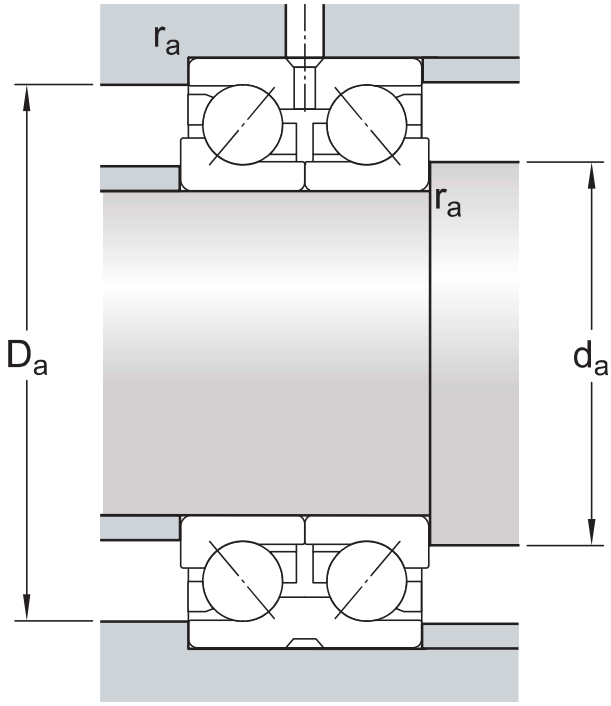

Abutment dimensions

d_a	min. 165 mm	Abutment diameter shaft
D_a	max. 201 mm	Abutment diameter housing
r_a	max. 1 mm	Fillet radius

Calculation data

Basic dynamic load rating	C	135 kN
Basic static load rating	C_0	220 kN
Fatigue load limit	P_u	6.8 kN
Reference speed		2 800 r/min
Limiting speed		3 000 r/min
Calculation factor	k_r	0.095
Limiting value	e	1.14
Calculation factor	X	0.57
Calculation factor	Y_0	0.52
Calculation factor	Y_1	0.55
Calculation factor	Y_2	0.93

Tolerances and clearances

GENERAL BEARING SPECIFICATIONS

- Tolerances: Normal, P6, P5
- Internal clearance: table, drawing no

BEARING INTERFACES

- Seat tolerances for standard conditions
- Tolerances and resultant fit

More Information

Product details

- Designs and variants
- General bearing specifications
- Loads
- Temperature limits
- Permissible speed
- Designation system

Engineering information

- Principles of rolling bearing selection
- General bearing knowledge
- Bearing selection process
- Bearing interfaces
- Seat tolerances for standard conditions
- Selecting internal clearance or preload
- Lubrication
- Sealing, mounting and dismounting
- Bearing failure and how to prevent it

Tools

- SKF Product select
- SimPro Quick
- Bearing Frequency Calculator
- LubeSelect for SKF greases
- Heater selection tool
- SKF mounting and dismounting instructions

Terms of use

By accessing and using this website / app owned and published by AB SKF (publ.) (556007-3495 · Gothenburg) (“SKF”), you agree to the following terms and conditions:

Warranty Disclaimer and Limitation of Liability
Although every care has been taken to assure the accuracy of the information on this website / app, SKF provides this information "AS IS" and DISCLAIMS ALL WARRANTIES, EXPRESS OR IMPLIED, INCLUDING, BUT NOT LIMITED TO, IMPLIED WARRANTIES OF MERCHANTABILITY AND FITNESS FOR A PARTICULAR PURPOSE. You acknowledge that your use of this website / app is at your sole risk, that you assume full responsibility for all costs associated with use of this website / app, and that SKF shall not be liable for any direct, incidental, consequential, or indirect damages of any kind arising out of your access to, or use of the information or software made available on this website / app.

Any warranties and representations in this website / app for SKF products or services that you purchase or use will be subject to the agreed upon terms and conditions in the contract for such product or service.

Further, for non-SKF websites / apps that are referenced in our website / app or where a hyperlink appears, SKF makes no warranties concerning the accuracy or reliability of the information in these websites / apps and assumes no responsibility for material created or published by third parties contained therein. In addition, SKF does not warrant that this website / app or these other linked websites / apps are free from viruses or other harmful elements.

Third Party Services
When viewing YouTube content via the SKF website(s) (i.e. using YouTube API Services), you agree to be bound by the YouTube Terms of Service.

Copyright
Copyright in this website / app copyright of the information and software made available on this website / app rest with SKF or its licensors. All rights are reserved. All licensed material will reference the licensor that has granted SKF the right to use the material. The information and software made available on this website / app may not be reproduced, duplicated, copied, transferred, distributed, stored, modified, downloaded or otherwise exploited for any commercial use without the prior written approval of SKF. However, it may be reproduced, stored and downloaded for use by individuals without prior written approval of SKF. Under no circumstances may this information or software be supplied to third parties.

This website /app includes certain images used under license from Shutterstock, Inc.

Trademarks and Patents
All trademarks, brand names, and corporate logos displayed on the website / app are the property of SKF or its licensors, and may not be used in any way without prior written approval by SKF. All licensed trademarks published on this website / app reference the licensor that has granted SKF the right to use the trademark. Access to this website / app does not grant to the user any license under any patents owned by or licensed to SKF.

Changes
SKF reserves the right to make changes or additions to this website / app at any time.