IF series

Sealed pushbutton switches with Ø 25 mm actuator - bushing dia. 16 mm

- ❑ **Can be operated with gloved hands**
- ❑ **Snap-in and threaded bushing models**
- ❑ **Resistant to frost**
- ❑ **Sealed to IP54 or IP67**

UG1006-A

B

ELECTRICAL AND GENERAL SPECIFICATIONS

- Max. current/voltage rating with resistive load : 400mA 32VAC - 100mA 50VDC
- Initial contact resistance : 50 mΩ max.
- Insulation resistance : 1 GΩ min. at 500VDC
- Dielectric strength : 1.000 VAC rms. between terminals and frame 1500 VAC between terminals
- Electrical life at full load : 500.000 cycles
- Panel thickness :
  - Snap-in models : 0,8 mm (.031) min. - 2,5 mm (.098) max.
  - Threaded bushing models : 0,8 mm (.031) min. - 5 mm (.196) max.
- Total travel : 4 mm (.157)
- Typical operating force : 6,5 N +/- 2N
- Mechanical life : 1.000.000 cycles
- Torque : 1,5 Nm max. applied to nut
- Soldering : 320°C max. for 3 seconds

MATERIALS

- Case : thermoplastic UL94-V0
- Actuator : polyamide 12, rubber filled
- Bushing/bezel : polyamide 6/6
- Contacts : solid silver, gold plated
- Terminal seal : epoxy

ENVIRONMENTAL SPECIFICATIONS

- Front panel sealing (switches mounted on panel) :
  . IP67 (threaded bushing models)
  . IP54 (snap-in models)
- Operating temperature : -20°C to +85°C

IF | ☐ | ☐ | ☐ | ☐ | ☐ | ☐

SERIES

Mounting
- **B** Snap-in
- **S** Threaded bushing

Electrical function
- **3** Normally open (NO)

Terminals
- **Z1** Quick- connect or solder 2,8 x 0,5 mm

Contacts
- **AD** Solid silver, gold plated

Actuator colour
- **1** Blue
- **1/4** Dark blue
- **2** Black
- **3** Green
- **5** Yellow
- **6** Red
- **7/1** White
- **9** Orange

Grey RAL7040 : on request

Case colour
- **00** Black
- **20** Red

Models



Snap-in
IFB3Z1AD NO



Threaded bushing
IFS3Z1AD NO

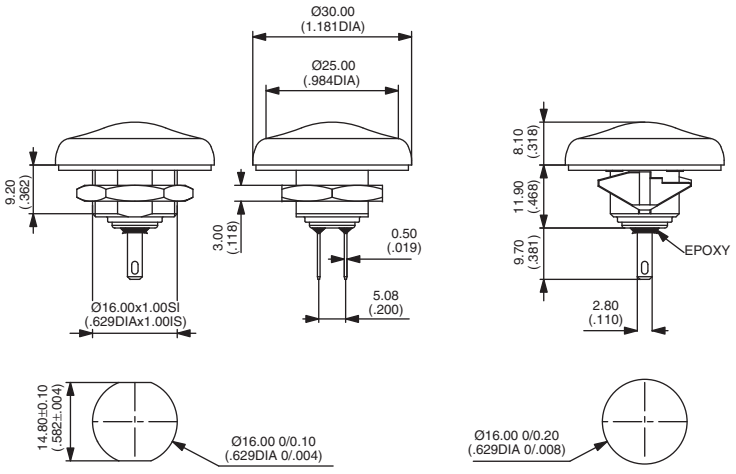

Mounting accessories : Standard hardware supplied : 1 flat seal (IFB series)
1 flat seal and 1 hex nut 19 mm (.748) across flats (IFS series) . The hex nut is presented in section I (part number 10-621).

Packaging unit : 20 pieces