trumeter
innovation by design

3602 Series

Mechanical Totalizing Counter



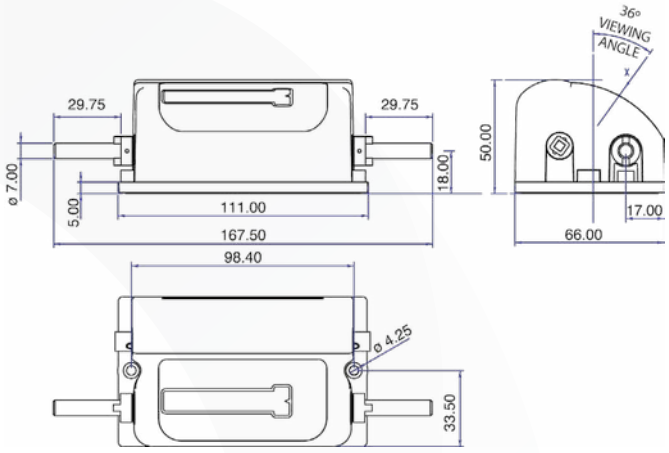

This unit counts revolutions on many different types of production machinery. Robustly constructed for continuous operation at high speeds with the main shaft running in double oil impregnated bearings to ensure accurate, long term, trouble free service. It is supplied with a double drive with wing bush, customer configurable reset.

Key Features

- 6-digit 6.4mm (0.25in) readout
- Up to 3000 counts per minute with 1:1 gear ratio
- 1:1, 1:10, 2:1, 3:1, 4:1 gearings as standard
- Front viewing
- Reset to zero
- Reset by lever
- Customer Configurable Reset

Specification

Display	White on black, decimals black on white 0.25in (6.4mm) figures
Base Material	Black PC-ABS plastic
Cover Material	Grey ABS plastic
Drive Shaft Diameter	0.275 inch (7mm) diameter
Gearing	1:1, 1:10, 2:1, 3:1, 4:1 as standard. Others on application
Bearings	Bronze, oil impregnated for life
Operating Torque	180g.cm (2.5oz.in) at 1:1 gearing
Maximum Shaft Speed	3000 RPM
Maximum Count Speed	3000 CPM
Operating Temp	-10°C to +50°C [14°F to 122°F]
Storage Temp	-20°C to +50°C [-4°F to 122°F]
Environmental Protection	IP40
Nett Weight	200g

trumeter
innovation by design

Measuring Wheel Ordering Information

Material	Width	12" circumference	18" circumference	1/3m circumference	1/2m circumference
Rubber Covered Plastic	5/8" (16mm)	007571	007573	007905	007574
Polyurethane Covered Plastic	5/8" (16mm)	011105	011106		
Knurled Aluminum	5/8" (16mm)	001558	001622		

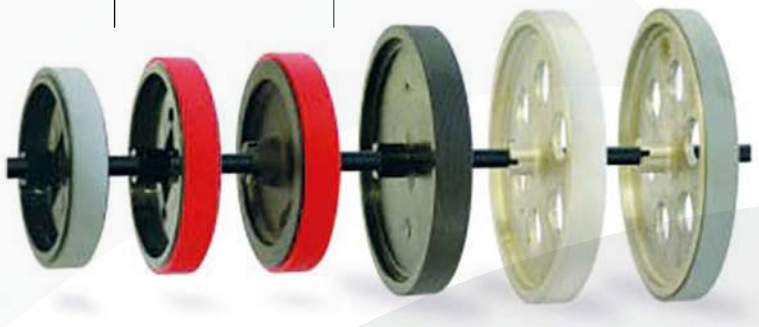

Part Number Ordering Chart

COUNTER TYPE	NUMBER OF DECIMAL PLACES
3602- FRONT VIEWING	**0** NO DECIMAL PLACES
	1 ONE DECIMAL PLACE

FIG WHEEL READING	GEAR RATIO
0 FULL FIGURES (PLAIN)	**0** 1:10
1 0 - 11" FIG WHEEL (FEET & INCHES)	**1** 1:1
2 0 - 9" FIG WHEEL (FEET & TENTHS)	**2** 2:1
3 0 - 9" FIG WHEEL (YARDS & TENTHS)	**3** 3:1
4 FULL FIGURES (FEET)	**4** 4:1
5 FULL FIGURES (YARDS)	**5** 1:25
6 FULL FIGURES (METRES)	**6** 10:1
7 0 - 7/8" FIG WHEEL (YARDS & EIGTHS)	**7** 2:3
	8 128:105
9 0 - 9cm FIG WHEEL WITH 100 LINES(M/cm)	**9** 64:105

DRIVE DIRECTION

TC TOP COMING

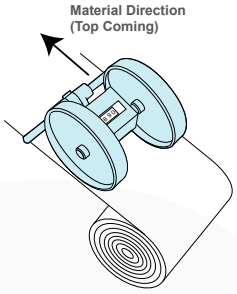

TG TOP GOING

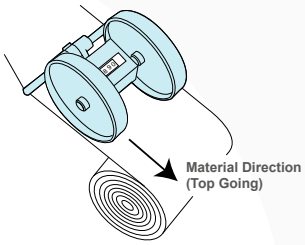

ALL COUNTERS ARE 6 DIGIT

RESET POSITION IS CUSTOMER SELECTIVE

DOUBLE DRIVE SHAFT WITH WING BUSHES FITTED AS STANDARD

EXAMPLE OF CODING: 3602 - 117TG
3602 = FRONT VIEWING
1 = ONE DECIMAL PLACE
1 = 0-11" FIG WHEEL (FEET & INCHES)
7 = 2:3
TG = TOP GOING

3602-117TG = 99999 - 11 / 2:3 / TOP GOING



www.trumeter.com

Trumeter (The Americas)
702 S. Military Trail
Deerfield Beach, Florida
FL 33442,
USA
Tel: +1 954 725 6699
Email: sales.usa@trumeter.com

Trumeter (Europe)
Pilot Mill
Alfred Street
Bury,
BL9 9EF
Tel: +44 161 674 0960
Email: sales.uk@trumeter.com

Innovative Design Technologies Sdn. Bhd
Lot 5881, Lorong Iks Bukit Minyak 1
Taman Perindustrian Iks, 14000 Bukit Tengah
Penang, Malaysia
Web: www.idtworld.com
Tel: + 604 5015700
Email: sales.my@idtworld.com