Open Pillow Blocks **Simplicity®**

OPEN PILLOW BLOCKS – PMN

Download CAD

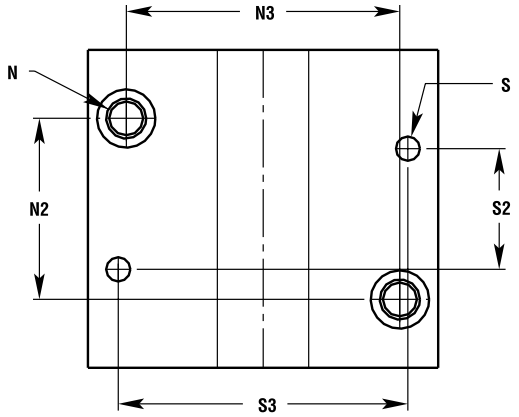



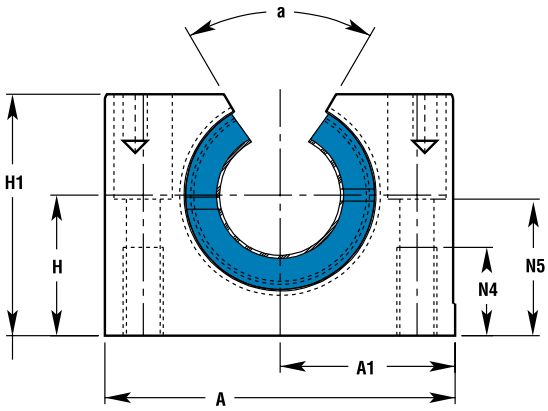

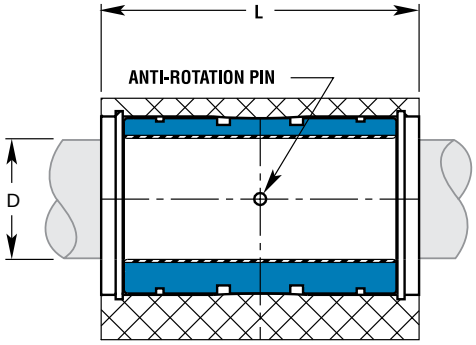

DIMENSIONAL INFORMATION

PART NO.		D NOM. BRG. I.D.	H	H1	A	A1	L	N	N2	N3	N4	N5	S	S2	S3	a	MAX. STATIC LOAD LBS.		MAX. STATIC LOAD N		ASSEM. WT.
OPEN			CENTERLINE														FRELON		FRELON		
PRECISION	COMPENSATED	MIN.	.015	HEIGHT	WIDTH	.013	LENGTH	BOLT								MM	GOLD	J & W	GOLD	J & W	KG.
PMN 12	PMN 12C	12	18	28	43	21.5	39	M5 x 0.8	23.15	32.15	11	16.5	4	32	34	66	1777	888	7907	3953	0.096
PMN 16	PMN 16C	16	22	35	53	26.5	43	M6 x 1.0	26.15	40.15	13	21	4	35	42	68	2667	1334	11870	5935	0.162
PMN 20	PMN 20C	20	25	42	60	30	54	M8 x 1.25	32.15	45.15	18	24	5	45	50	60	4167	2083	18541	9270	0.267
PMN 25	PMN 25C	25	30	51	78	39	67	M10 x 1.5	40.15	60.15	20	29	6	20	64	60	6715	3358	29881	14941	0.536
PMN 30	PMN 30C	30	35	60	87	43.5	79	M10 x 1.5	45.15	68.15	22	34	6	30	72	60	9444	4722	42026	21013	0.831
PMN 40	PMN 40C	40	45	77	108	54	91	M12 x 1.75	58.15	86.15	26	44	8	35	90	60	14814	7407	65923	32962	1.499
PMN 50	PMN 50C	50	50	88	132	66	113	M16 x 2.0	50.20	108.20	34	49	10	42	108	60	23147	11574	103005	51503	2.539

Only certified Simplicity 60 Plus Shafting provides maximum linear bearing performance.

Inch Series–page 40 Metric Series–page 72