Brand of NTN corporation

Technical data

UCPA211

Bearing units



Grey cast housing, radial insert ball bearing with socket set screws,seal with slinger

KIT CONTENT

UC211G2, PA211

VISUAL (S)

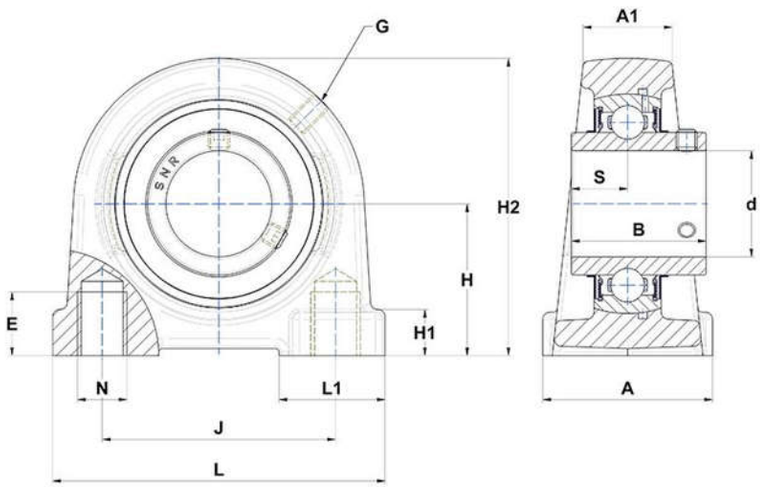

PRODUCT DEFINITION

Brand	SNR
A - Housing width	66 mm
A1 - Housing top width	33 mm
B - Width of Inner Ring	55,6 mm
d - Shaft diameter	55 mm
E - Mounting hole thread depth	25 mm

PRODUCT DEFINITION	
G - Grease fitting	M6x1
H - Distance mounting base to centerline spheric. seating diam.	63,5 mm
H1 - Housing foot height	14 mm
H2 - Housing height	125 mm
J - Mounting holes distance	104 mm
L - Housing length	140 mm
L1 - Housing foot length	47 mm
N - Mounting hole dimension	M16
S - Distance front side/bearing centre	22,2 mm

PRODUCT PERFORMANCE	
C - Dynamic load rating	43550000 mN
C0 - Static load rating	29200000 mN
Operating temperature min.	253,15 °K
Operating temperature max.	373,15 °K

OTHER FEATURES	
Mass	3,22 kg
Recommended tightening torque for set screw	22 N-m