Sauter GmbH
Ziegelei 1
D-72336 Balingen
E-Mail: info@sauter.eu

Tel: +49-[0]7433- 9933-199
Fax: +49-[0]7433-9933-149
Internet: www.sauter.eu

Instruction Manual
Digital Force Gauge

SAUTER FK

Version 1.5
05/2018
GB



PROFESSIONAL MEASURING

FK-BA-e-1815

GB

SAUTER FK

Version 1.5 05/2018

Instruction Manual Digital Force Gauge

Thank you for buying a digital SAUTER force gauge. We hope you are pleased with your high quality force gauge with its big functional range. If you have any queries, wishes or helpful suggestions, do not hesitate to call our service number.

Summarize:

1 Scope of delivery 3

2 Working Conditions 4

3 Electrical power supply 4

4 Technical data 4

5 Operation 4

5.1 Display 4

5.2 Keyboard units 4

5.3 Display Return of 180° 5

5.4 Measurements (Track Mode) 5

5.5 Peak-Hold Function (Peak Mode) 5

6 Backside Fixing to a test stand 5

7 Warning notices 5

8 Adjustment procedure of FK force gauges 7

1 Scope of delivery

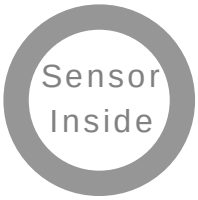

- SAUTER FK
- Electrical power supply
- Transport case
- Standard attachments, as shown below:
  Extension rod: 90mm



Sensor inside signifies that the measuring cell is inside the housing of the display unit

Conditions:

Measurement principles:

1. Continuous measurement (Track)
2. Capture of the max. value (Peak Hold)
   In this mode, the max. value is always captured during several consecutive measurements

Dimensions in mm

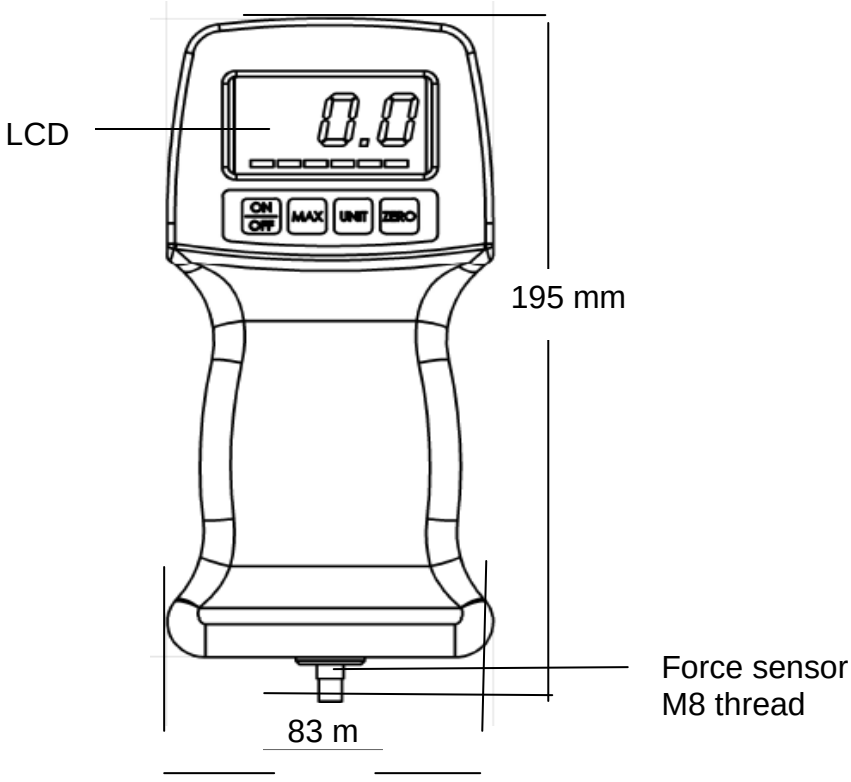

2 Working Conditions

Working temperature: 10°C to 30°C
Humidity: 15% to 80%

3 Electrical power supply

- Either by batteries (6 x AA batteries) not rechargeable!
  Batteries have to be changed if necessary.
- or current power supply
  Using electricity network:
  - Connection by power adapter cable

4 Technical data

- Accuracy: ± 0,5 % of Capacity
- Internal test frequency: 1.000 Hz
- Overload protection: 200% of max.
- Dimensions: L x W x H: 195 x 82 x 35 mm
- Net weight: ca. 0.72kg

5 Operation

5.1 Display

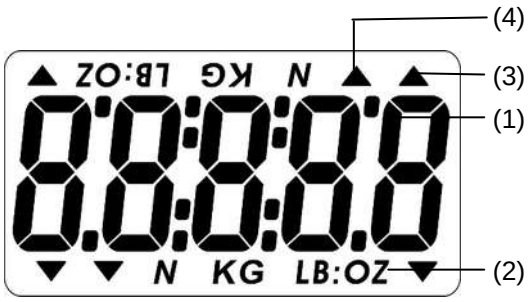

(1) Measuring Result
(2) Measuring Units
(3) Measuring Direction
(4) Indication of PEAK Mode

5.2 Keyboard units

ON / OFF:
to switch on, ON has to be pressed for about 1s

MAX:
To change between Track mode (continuous measurement) and Peak mode (capture of maximum values)

UNIT:
Press shortly to select the desired unit: N, kg, lb, ou

ZERO:
- Zeros the measurement result (Tare function)
- Cleans the peak value (in Peak mode)

5.3 Display Return of 180°

When the instrument itself is turned for 180°, the display indication will turn automatically.

5.4 Measurements (Track Mode)

On the display (1) the continuous force is shown in a defined direction (3)
To zero the display, please press ZERO key

5.5 Peak-Hold Function (Peak Mode)

To activate please press: MAX key

6 Backside Fixing to a test stand

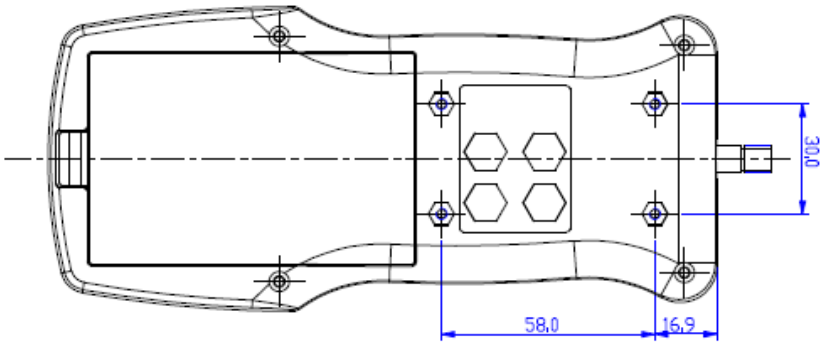

Mounting is possible on all SAUTER test stands by means of 4 x M3 screws.

7 Warning notices

Force measurements which are performed in an incorrect way, can lead to serious injuries of living beings and damage of objects. Therefore, trained staff may practice them only.
Please avoid that forces are reacting on the force gauge, which are exceeding the instrument's max. load (max). Or if forces are not reacting axially from the force sensor onto the instrument or if high impulse forces are reacting on the force gauge.

Prevent jolts, torsion and oscillation (e.g. by suspending loads aslope) of all kinds, because there is a risk of breakage and in all cases there will be a lack of measurement accuracy.

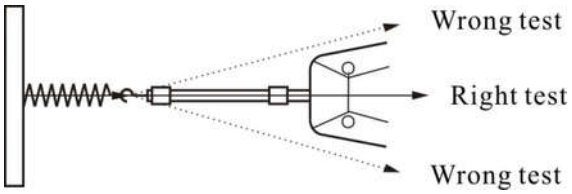

Inappropriate use

Do not use the instrument for medical measurements. In the case that small quantities are removed or added to the material to be measured, incorrect measuring results can be displayed, due to the “stability compensation“ in the instrument (such as slowly draining off of liquid from a container suspended at the instrument). Do not leave attached a continuous load. This can damage the measuring unit as well as the parts, relevant to safety.

Overload

Be sure to prevent overloading the instrument in excess of the stated maximum load (max.), minus any tare weight that may possibly exist. This could damage the instrument (risk of breakage).

Attention:

- Always make sure that there are no people or objects below the load, which could be injured or damaged!
- The instrument is not suitable for weighing people. Do not use it as a baby scale!
- The instrument does not comply with the medical product law (MPG).
- Never operate the instrument in hazardous locations. The series design is not explosion-proof.
- Structural alterations may not be done on the instrument. This can lead to incorrect measuring results, faults concerning safety regulations as well as to destruction of the instrument.
- The instrument may only be used in compliance with the described guidelines.
- Varying ranges of application or planned use must be approved by SAUTER in writing.

Warranty

The warranty is not valid under following aspects:

- Non-observance of our guidelines in the operating instructions
- Use beyond the specified applications
- Alterations or opening the device unprofessionally, as well as mechanical damage and damage caused by media or liquids
- Natural wear out and abrasion

• Inappropriate setting up or electric installation
• Overload of the measuring equipment

Inspection of measuring and testing equipment

Within the scope of quality assurance, the metrology features of the instrument and any possible available adjusting weight must be checked at regular intervals. For this purpose, the responsible user must define a suitable interval as well as the nature and scope of this inspection. Information is available on SAUTER home page (www.sauter.eu) concerning the monitoring of instrument test substances and the test weights required for this. Test weights and instruments can be adjusted quickly and reasonably priced in KERN's accredited DAkkS calibration laboratory (return to national normal).

IMPORTANT

Observe the information in the operating instructions. Please read the instruction manual carefully before the initial operation, even if you already have gained experience with SAUTER instruments.

8 Adjustment procedure of FK force gauges

Take care for stable working conditions

1. A short warming up time of approx. 1 minute is recommended for stabilisation.
Switch on the FK by pressing **"ON/OFF"** button. The instrument is held in vertical, hanging position.



2. As soon as "0" is displayed, press **"UNIT"** button and **"ZERO"** button at the same time, until **"CAL"** appears on the display.



3. Wait a few seconds and display will show the necessary **adjustment weight**, e.g. 5,000kg for FK 50 or 10,00kg for FK 100.



4. Put the corresponding weight at the loading hook. Avoid trembling and **keep still while holding the weight**. Hint: hold device with both hands while shoring up your elbows on a table or desk or fix it at a solid object (test stand).



5. Hold position until **"F"** appears on the display. In this case remove weight and adjustment is completed. In case of **"E"** is displayed - repeat step **1.** to **5.** until **"F"** attests a successful adjustment.

Annotation:
To have a look at the CE Declaration of Conformity, please click onto the following link: https://www.kern-sohn.com/shop/de/DOWNLOADS/