7211 BEP

Popular item

Dimensions

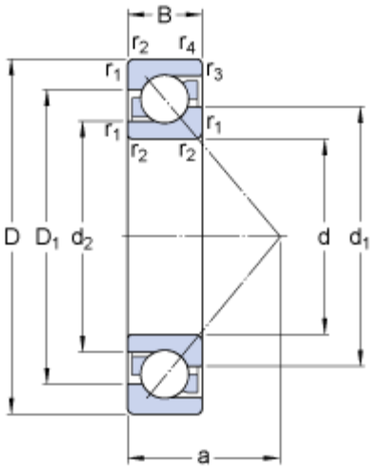

d		55	mm
D		100	mm
B		21	mm
d_1	≈	72.5	mm
d_2	≈	63.62	mm
D_1	≈	83.3	mm
a		43	mm
$r_{1,2}$	min.	1.5	mm
$r_{3,4}$	min.	1	mm

Abutment dimensions

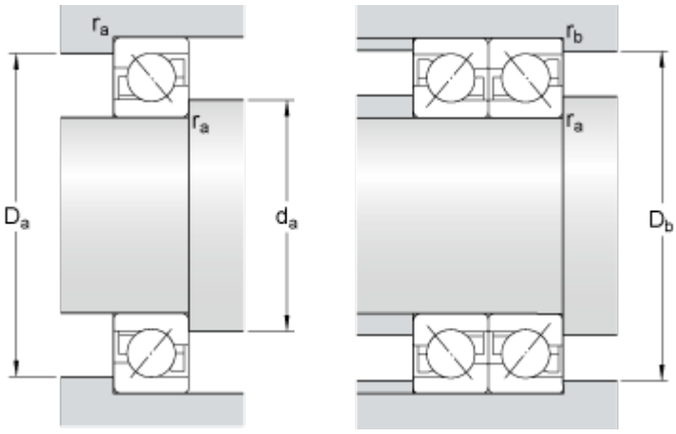

d_a	min.	64	mm
D_a	max.	91	mm
D_b	max.	94	mm
r_a	max.	1.5	mm
r_b	max.	1	mm

Calculation data

Basic dynamic load rating	C	46.2	kN
Basic static load rating	C_0	36	kN
Fatigue load limit	P_u	1.53	kN
Reference speed		8000	r/min
Limiting speed		7500	r/min
Calculation factor	A	0.022	
Calculation factor	k_r	0.095	
Calculation factor	e	1.14	

Single bearing or bearing pair arranged in tandem

Calculation factor	X	0.35	

Calculation factor	Y_0	0.26
Calculation factor	Y_2	0.57

Bearing pair arranged back-to-back or face-to-face

Calculation factor	X	0.57
Calculation factor	Y_0	0.52
Calculation factor	Y_1	0.55
Calculation factor	Y_2	0.93

Mass

Mass bearing	0.62	kg