E23006

Sound deflector

BEAM DEFLECTOR M18

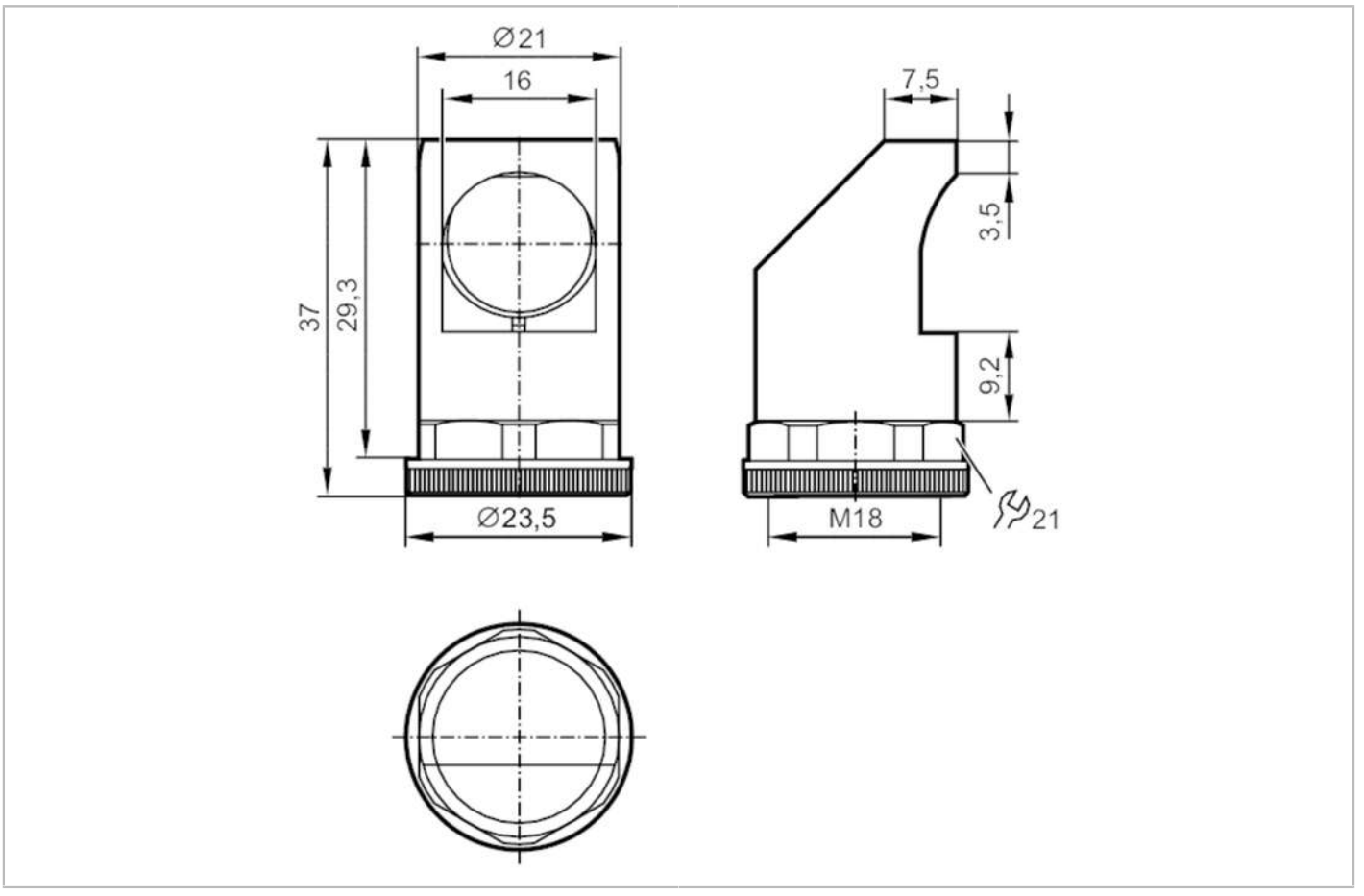

Application		
Design		for types UG, UG Cube
Mechanical data		
Weight	[g]	8.3
Materials		housing: ABS; Corner mirror: glass
Remarks		
Pack quantity		1 pcs.