Information Sheet

N° **INF06/96**
Issue 1

Product **SM500F**

Manual **IM/SM500F**
Issue 1 onwards

Pipe-mounting Kit Installation

1 Introduction

This document describes how to mount the instrument using the optional pipe-mounting kit.

The Pipe-mounting Kit (SM500/0703) comprises the following:

Description	Part No.	Qty
Adaptor Plate	SM500/0130	1
Pipe Clamp Plate	SM500/0131	2
M6 x 50 Hexagon-head Screw	B12476	2
M6 Spring Lock Washer	0225734	4
M6 Hexagonal Nut	0224172	2
M6 x 8 Hex agon-head Screw	B12478	2
M5 x 8 Pozidriv Screw	B12479	2
9.5O/D x 4.3 I/D Plain Washer	B12408	2
Information Sheet – Pipe-mounting Kit	INF06/96	1

Table. 1.1 Pipe-mounting Kit Contents

2 Tools Required

- No.2 Pozidriv screwdriver
- 10mm spanner (x2)

3 Pipe-mounting the Instrument

Referring to Fig. 3.1 overleaf, secure the instrument to a pipe as follows:

(1) Fit the two M6 x 50mm long hexagon-head screws through one clamp plate as shown.

(2) Using the appropriate holes to suit vertical or horizontal pipe, secure the clamp plate to the pipe-mounting bracket using the two M6 x 8mm long hexagon-head screws and and two of the spring lock washers.

(3) Position the pipe mounting bracket into the recesses on the rear of the instrument as shown and secure with the two bracket securing screws. Ensure the plastic washers remain in the positions fitted.

(4) Secure the instrument to the pipe using the remaining clamp plate, spring lock washers and nuts.

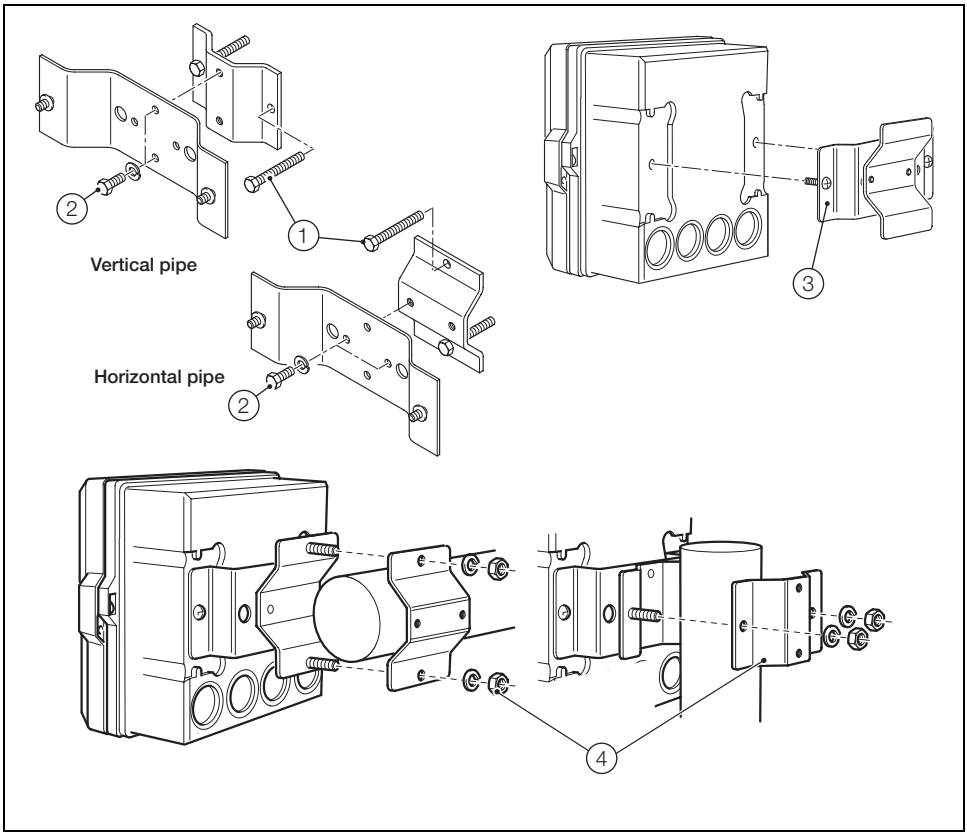

Fig. 3.1 Pipe-mounting the Instrument

ABB has Sales & Customer Support expertise in over 100 countries worldwide
www.abb.com

The Company's policy is one of continuous product improvement and the right is reserved to modify the information contained herein without notice.
Printed in UK (04.06)
© ABB 2006

INF06/96 Issue 1

ABB Limited
Howard Road, St. Neots
Cambridgeshire
PE19 8EU
UK
Tel: +44 (0)1480 475321
Fax: +44 (0)1480 217948

ABB Inc.
125 E. County Line Road
Warminster
PA 18974
USA
Tel: +1 215 674 6000
Fax: +1 215 674 7183