ASF 123S: Damper actuator with spring return and positioner



ASF123SF122

Improving energy efficiency

Overload protection and end stop detection for efficient usage of energy

Features

- For controllers with a continuous output (0...10 V)
- For operating air dampers, shut-off dampers, butterfly valves and multi-leaf dampers
- Self-centring spindle adapter
- Manual adjustment using hexagon socket, including locking of gear unit
- Wear-free brushless motor
- Maintenance-free
- Change direction of rotation by simply turning the actuator
- Suitable for all fitting positions



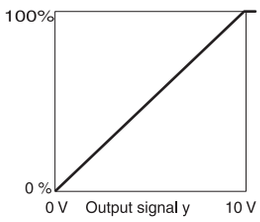

Technical data

Power supply		
	Power supply 24...48 V=	±20%
	Power consumption	5.4 W, 7.5 VA
Parameters		
	Running time for 90° motor	90 s
	Running time for 90° spring	15 s
	Torque and holding torque	18 Nm
	Angle of rotation	Max. 95°
Positioner	Control signal	0...10 V, R_i = 100 kΩ
	Positional feedback signal	0...10 V (0...100%)
	Admissible load	> 10 kΩ
	Switching range X_{sh}	0.2 V
Setting range	Starting point U_0	0 V
	Control span ΔU	10 V
Ambient conditions		
	Admissible ambient temperature	–32...55 °C
	Admissible ambient humidity	< 95% rh
Construction		
	Weight	2 kg
	Housing	Cast aluminium
	Power cable	0.9 m, 4 × 0.75 mm²
Standards and directives		
	Type of protection[1)]	IP 54 (EN 60529), suspended IP 42 (EN 60529), not suspended
	Protection class	III (IEC 60730)
	EMC directive 2004/108/EC	EN 61000-6-2, EN 61000-6-3
	Low-voltage directive 2006/95/EC	EN 60730-1, EN 60730-2-14
	Over-voltage categories	III
	Degree of contamination	II

Overview of types

Type	Properties
ASF123SF122	Damper actuator with spring return and positioner

Accessories

Type	Description
0370997001	Lever adaptor for converting rotation into stroke
0370998001	Lever adaptor for converting rotation into stroke, with carrier plate for mounting on wall or plinth

1) *Depending on fitting position, ensure IP 54*

 Right of amendment reserved © 2015 Fr. Sauter AG

Description of operation

The built-in positioner controls the positioning motor depending on the controller's output signal y. When the positioning signal is increasing, the coupling piece turns to the 90° position (scale on actuator) until the power-dependent cut-off. In the two end positions (limit stop of damper or limit stop due to angle-of-rotation limit, max. angle of rotation of 95° reached) or in the case of an overload, the torque-dependent cut-off is activated (no limit switches). If the power is cut off or is switched off by a safety device at connection 2 (cable = red), the motor releases the gear unit so that the spring turns the coupling piece back to the 0° position. The direction of rotation for the safety function is determined by how the actuator is mounted on the damper spindle. A signal converter is required for the reverse direction of operation.

Intended use

This product is only suitable for the purpose intended by the manufacturer, as described in the "Description of operation" section.
All related product documents must also be adhered to. Changing or converting the product is not admissible.

Engineering and fitting notes

The electronic concept enables the parallel operation of multiple air dampers with different torques. However, it must be ensured that the operating voltage is within the required tolerance range. The actuators must not be mechanically connected. The actuator can be fitted in any position and can be plugged directly onto the damper spindle and fixed by means of the self-centring clamping lever.
No auxiliary switches or potentiometers can be installed subsequently.
The angle of rotation can be limited to between 0° and 90° in 5° stages.

Beware of injury
When the housing is opened, there is a risk of injury due to the return spring.
▶The housing must not be opened.

Outdoor installation

We recommend protecting the devices from the weather if they are installed outside buildings.

Disposal

When disposing of the product, observe the currently applicable local laws.
More information on materials can be found in the Declaration on materials and the environment for this product.

Connection diagram

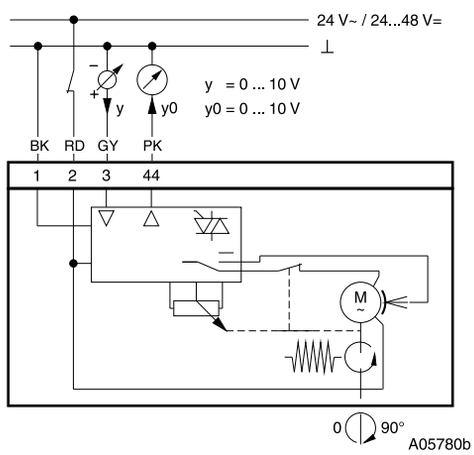

Direction of rotation 0°…90° when y is increasing
Direction of rotation for safety function can be determined during fitting

SAUTER Right of amendment reserved © 2015 Fr. Sauter AG

Dimension drawing

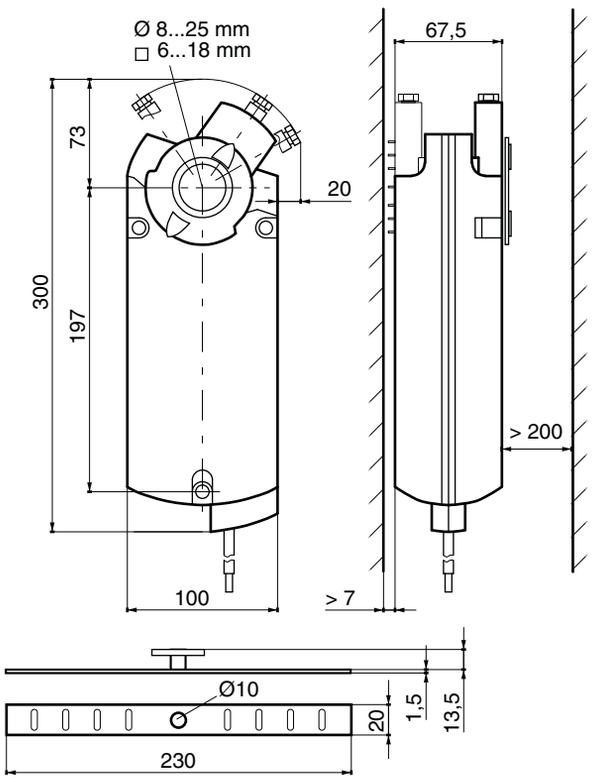

Fr. Sauter AG
Im Surinam 55
CH-4016 Basel
Tel. +41 61 - 695 55 55
www.sauter-controls.com

 Right of amendment reserved © 2015 Fr. Sauter AG