B8733201

Assembly kit 33, surface-mounted version

Surface-Mounted version. For raised installation. Suitable for knob diameter 33. Optional illumination possible, please order LED illumination separately.

Supply
1 assembly kit



TECHNICAL DATA

Material	PC (UL 94 HB) Visible part, PA 6
Colour	Visible part diamond
Standards	RoHS compliant, REACH compliant

Please take the dimensions from current parts. These are subject to material- and manufacturing-specific tolerances.

PURCHASING DATA

Weight/1 part	15 g
Customs tariff number (OKW product)	84879090
Country of manufacture	Germany

B8733201

Assembly kit 33, surface-mounted version

SURFACE-MOUNTED WITH LED ILLUMINATION



Minimum components
1 knob.
1 cover.
1 assembly kit surface-mounted version.
1 LED illumination.

SYSTEM COMPONENTS TO COMPLETE



B8033068
STAR-KNOBS 33
PA 6
volcano
33x14mm 6mm



B8033069
STAR-KNOBS 33
PA 6
nero
33x14mm 6mm



B8033638
STAR-KNOBS 33
PA 6
volcano
33x14mm 1/4″



B8033639
STAR-KNOBS 33
PA 6
nero
33x14mm 1/4″



B8133068
STAR-KNOBS 33, with knurls
PA 6
volcano
33x14mm 6mm



B8133069
STAR-KNOBS 33, with knurls
PA 6
nero
33x14mm 6mm



B8133638
STAR-KNOBS 33, with knurls
PA 6
volcano
33x14mm 1/4″



B8133639
STAR-KNOBS 33, with knurls
PA 6
nero
33x14mm 1/4″



B8233061
STAR-KNOBS 33
PC (UL 94 HB)
diamond
33x14mm 6mm



B8233063
STAR-KNOBS 33
PC (UL 94 HB)
ruby
33x14mm 6mm



B8233065
STAR-KNOBS 33
PC (UL 94 HB)
emerald
33x14mm 6mm



B8233066
STAR-KNOBS 33
PC (UL 94 HB)
sapphire
33x14mm 6mm

B8733201

Assembly kit 33, surface-mounted version



B8233631
STAR-KNOBS 33
PC (UL 94 HB)
diamond
33x14mm 1/4″



B8233633
STAR-KNOBS 33
PC (UL 94 HB)
ruby
33x14mm 1/4″



B8233635
STAR-KNOBS 33
PC (UL 94 HB)
emerald
33x14mm 1/4″



B8233636
STAR-KNOBS 33
PC (UL 94 HB)
sapphire
33x14mm 1/4″



B8333061
STAR-KNOBS 33, with knurls
PC (UL 94 HB)
diamond
33x14mm 6mm



B8333063
STAR-KNOBS 33, with knurls
PC (UL 94 HB)
ruby
33x14mm 6mm



B8333065
STAR-KNOBS 33, with knurls
PC (UL 94 HB)
emerald
33x14mm 6mm

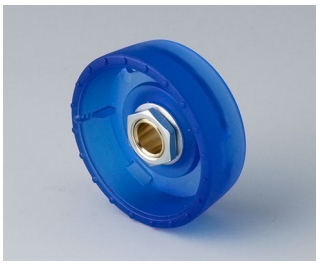

B8333066
STAR-KNOBS 33, with knurls
PC (UL 94 HB)
sapphire
33x14mm 6mm



B8333631
STAR-KNOBS 33, with knurls
PC (UL 94 HB)
diamond
33x14mm 1/4″



B8333633
STAR-KNOBS 33, with knurls
PC (UL 94 HB)
ruby
33x14mm 1/4″



B8333635
STAR-KNOBS 33, with knurls
PC (UL 94 HB)
emerald
33x14mm 1/4″



B8333636
STAR-KNOBS 33, with knurls
PC (UL 94 HB)
sapphire
33x14mm 1/4″



B8633008
Cover 33
PA 6
volcano



B8633009
Cover 33
PA 6
nero



B8633108
Cover 33, with finger recess
PA 6
volcano



B8633109
Cover 33, with finger recess
PA 6
nero

B8733201

Assembly kit 33, surface-mounted version

ACCESSORY "ILLUMINATION"



B7546001
LED illumination kit, 8 LEDs (RGB backlight)



B8733004
LED illumination kit

ACCESSORY



A6207009
Round nut M7 x 0.75



A6210009
Round nut M10 x 0.75



A6295009
Round nut 3/8"-32G



A6300000
Spanner



B8733001
Assembly support 33
ABS (UL 94 HB)
green

B8733201

Assembly kit 33, surface-mounted version

SURFACE-MOUNTED WITHOUT ILLUMINATION



Minimum components
1 knob.
1 cover.
1 assembly kit surface-mounted version.

SYSTEM COMPONENTS TO COMPLETE



B8033068
STAR-KNOBS 33
PA 6
volcano
33x14mm 6mm



B8033069
STAR-KNOBS 33
PA 6
nero
33x14mm 6mm



B8033638
STAR-KNOBS 33
PA 6
volcano
33x14mm 1/4″



B8033639
STAR-KNOBS 33
PA 6
nero
33x14mm 1/4″



B8133068
STAR-KNOBS 33, with knurls
PA 6
volcano
33x14mm 6mm



B8133069
STAR-KNOBS 33, with knurls
PA 6
nero
33x14mm 6mm



B8133638
STAR-KNOBS 33, with knurls
PA 6
volcano
33x14mm 1/4″



B8133639
STAR-KNOBS 33, with knurls
PA 6
nero
33x14mm 1/4″



B8233061
STAR-KNOBS 33
PC (UL 94 HB)
diamond
33x14mm 6mm



B8233063
STAR-KNOBS 33
PC (UL 94 HB)
ruby
33x14mm 6mm



B8233065
STAR-KNOBS 33
PC (UL 94 HB)
emerald
33x14mm 6mm



B8233066
STAR-KNOBS 33
PC (UL 94 HB)
sapphire
33x14mm 6mm

B8733201

Assembly kit 33, surface-mounted version



B8233631
STAR-KNOBS 33
PC (UL 94 HB)
diamond
33x14mm 1/4″



B8233633
STAR-KNOBS 33
PC (UL 94 HB)
ruby
33x14mm 1/4″



B8233635
STAR-KNOBS 33
PC (UL 94 HB)
emerald
33x14mm 1/4″



B8233636
STAR-KNOBS 33
PC (UL 94 HB)
sapphire
33x14mm 1/4″



B8333061
STAR-KNOBS 33, with knurls
PC (UL 94 HB)
diamond
33x14mm 6mm



B8333063
STAR-KNOBS 33, with knurls
PC (UL 94 HB)
ruby
33x14mm 6mm



B8333065
STAR-KNOBS 33, with knurls
PC (UL 94 HB)
emerald
33x14mm 6mm

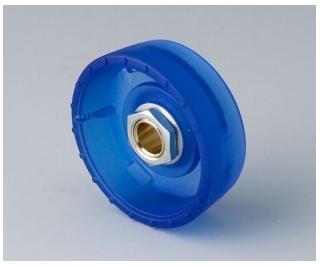

B8333066
STAR-KNOBS 33, with knurls
PC (UL 94 HB)
sapphire
33x14mm 6mm



B8333631
STAR-KNOBS 33, with knurls
PC (UL 94 HB)
diamond
33x14mm 1/4″



B8333633
STAR-KNOBS 33, with knurls
PC (UL 94 HB)
ruby
33x14mm 1/4″



B8333635
STAR-KNOBS 33, with knurls
PC (UL 94 HB)
emerald
33x14mm 1/4″



B8333636
STAR-KNOBS 33, with knurls
PC (UL 94 HB)
sapphire
33x14mm 1/4″



B8633008
Cover 33
PA 6
volcano



B8633009
Cover 33
PA 6
nero



B8633108
Cover 33, with finger recess
PA 6
volcano



B8633109
Cover 33, with finger recess
PA 6
nero

B8733201

Assembly kit 33, surface-mounted version

ACCESSORY "ILLUMINATION"



B7546001
LED illumination kit, 8 LEDs
(RGB backlight)

ACCESSORY



A6207009
Round nut M7 x 0.75



A6210009
Round nut M10 x 0.75



A6295009
Round nut 3/8"-32G



A6300000
Spanner



B8733001
Assembly support 33
ABS (UL 94 HB)
green

Subject to technical modification without notice. © by OKW Gehäusesysteme, Buchen/Germany.

Ring

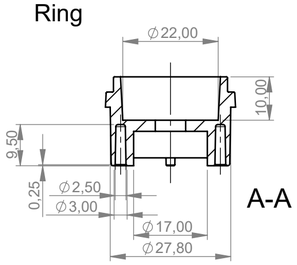

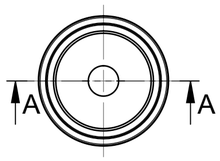

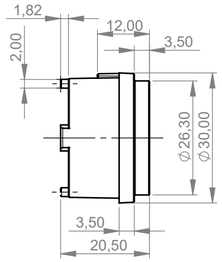

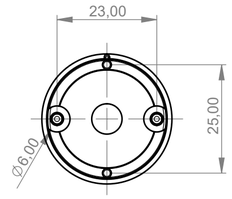

Aufbau

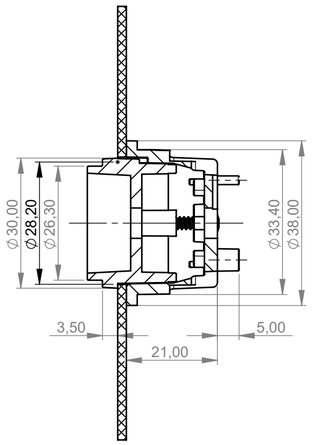

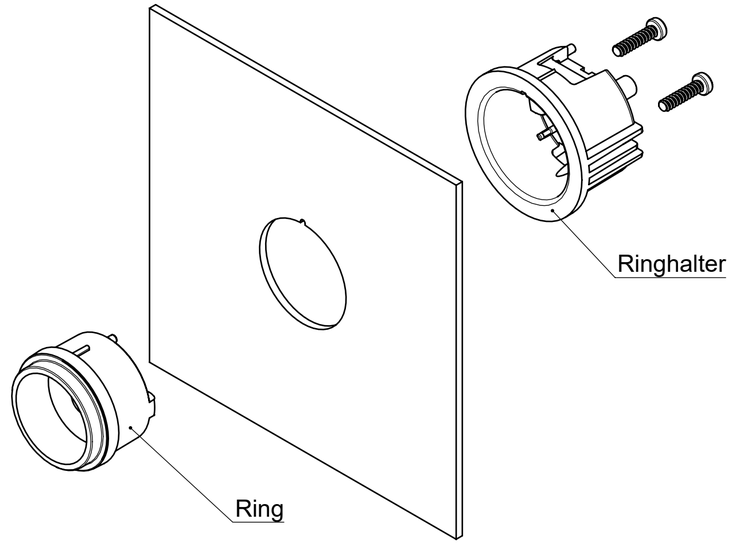

Ringhalter

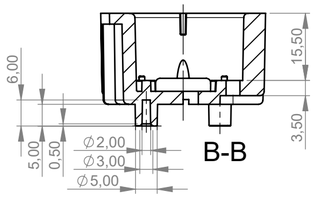

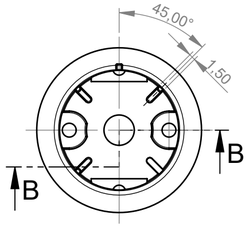

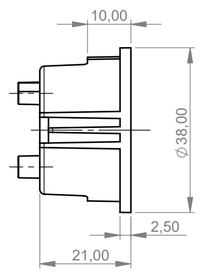

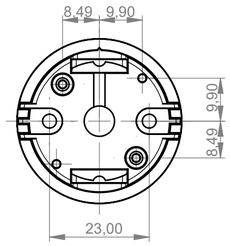

Bitte die Maße an aktuellen Teilen abnehmen.
Diese unterliegen material- und produktionsspezifischen Fertigungstoleranzen.

Please take the dimensions from current parts.
These are subject to material- and manufacturing-specific tolerances.

Informationskopie
wird nicht aktualisiert
Copy for Information
will not be updated

Technische Änderungen vorbehalten. Irrtümer oder Druckfehler begründen keinen Anspruch auf Schadenersatz. Wichtige Einbaumaße bitte direkt mit dem aktuellen Produkt abstimmen.

Subject to technical modification without prior notice. Typographical and other errors do not justify any claim for damages. All dimensions should be verified using an actual moulded part.

Sous reserve de modifications techniques. Toute erreur ou faute d'impression ne justife aucune demande d'indemnisation. Nous prions les clients de verifer les dimensions des composants avec les boitiers avant le montage.

Erst. am:	09.12.2008	Toleranzen:	Status:
Erst. von:	Hasselb	DIN 16901 T130	ÄNDERUNG
Freig. am:		Volumen:	Zeichnungsart:
Freig. von:			KUNDE
Revision:	01		DIN 6 Teil 2

This document contains proprietary information of OKW Gehäusesysteme GmbH and is tendered subject to the conditions that the information be retained in confidence not be reproduced or copied and not be used or incorporated in any product.

OKW GEHÄUSE SYSTEME

STAR-KNOBS 33
Montage-Set 33, Aufbauvariante

B87332**

M 1:1

Für dieses Dokument behalten wir uns alle Urheberrechte vor. Es darf auch auszugsweise weder vervielfältigt noch Dritten in irgendeiner Form zugänglich gemacht werden.

Dateiname: 00011106