Brand of NTN corporation

Technical data

UKPA209H

Bearing units



Grey cast housing, radial insert ball bearing with adapter sleeve,seal with slinger

KIT CONTENT

UK209G2H, PA209

VISUAL (S)

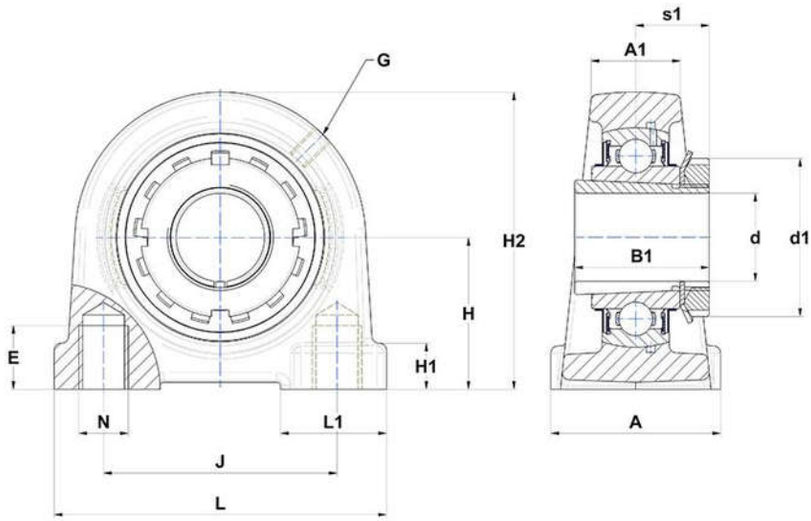

PRODUCT DEFINITION

Brand	SNR
A - Housing width	60 mm
A1 - Housing top width	32 mm
B - Width of Inner Ring	30 mm
d - Shaft diameter	40 mm
d1 - Outer dia of eccent. Lock. collar / nut of adapter sleeve	65 mm

PRODUCT DEFINITION	
E - Mounting hole thread depth	25 mm
G - Grease fitting	M6x1
H - Distance mounting base to centerline spheric. seating diam.	54,2 mm
H1 - Housing foot height	13 mm
H2 - Housing height	108 mm
J - Mounting holes distance	90 mm
L - Housing length	120 mm
L1 - Housing foot length	42 mm
N - Mounting hole dimension	M14
s1 - Distance nut to middle of bearing raceway	26 mm

PRODUCT PERFORMANCE	
C - Dynamic load rating	31850000 mN
C0 - Static load rating	20800000 mN
Operating temperature min.	253,15 °K
Operating temperature max.	373,15 °K

OTHER FEATURES	
Mass	2,3 kg
Adapter sleeve designation	H2309