sauermann®





DATA SHEET

TH 210-R

Humidity and temperature transmitter

- **Stainless steel or polycarbonate probes**
- **Two 4-wire analogue output 0-5/10 V or 0/4-20 mA**
- **2 relay outputs**
- **ABS V0 IP65 housing, with or without display**

Features

- Power supply 24 Vdc/Vac or 100-240 Vac with galvanic insulation
- "¼ turn" system mounting with wall-mount plate
- Calculated parameters absolute humidity, dew point, combination ratio, wet temperature and enthalpy
- Trend indicator

Part number

TH 210 — B — N — D — P — 150 — R — ●

Power supply / Output
B: 24 Vac/Vdc
H: 100-240 Vac

Display
O: with display
N: without display

Mounting of the probe
S: ambiant
D: remote

Type of probe
I: stainless steel[1]
P: polycarbonate

Probe length (mm)
150: remote
300: remote

Relay outputs

Probe cable length (remote models only)
( ): cable lentgh 2 m
05M: cable length 5 m
10M: cable length 10 m

Example: TH 210 – BNDP150 – R: Temperature and humidity transmitter, 24 Vac/Vdc power supply, without display, with remote 150 mm polycarbonate probe, cable of 2 m length and relay outputs.
Important note: the TH 210 – H model (100-240 Vac) is only available with display.

Technical specifications

Parameter	Accuracy[3]	Measuring range	Resolution
Relative humidity (% RH)	Accuracy (Repeatability, linearity, hysteresis): ±1.5% RH (from 5 to 95% RH and from 15 °C to 25 °C) Temperature dependence: ±0.04 x (T-20)% RH (if T<15 °C or T>25 °C)	From 0 to 100 %RH	0.1%RH
Wet temperature[2] (°C_{tw}, °F_{tw})	Response time: < 10 seconds (from 10 to 80% RH, V_{air} = 2 m/s)	From -50 to 100°C_{tw}	0.1°C_{tw}; 0.1°F_{tw}
Dew-point[2] (°C_{td}, °F_{td})	Response time: < 10 seconds (from 10 to 80% RH, V_{air} = 2 m/s)	From -50 to 100°C_{td}	0.1°C_{td}; 0.1°F_{td}
Absolute humidity[2] (g/m³)	Response time: < 10 seconds (from 10 to 80% RH, V_{air} = 2 m/s)	From 0 to 600 g/m³	0.1 g/m³
Enthalpy[2] (kJ/kg)	Response time: < 10 seconds (from 10 to 80% RH, V_{air} = 2 m/s)	From 0 to 15 000 kJ/kg	From 0 to 10 000: 0.1 kJ/kg From 10,000 to 15,000: 1 kJ/kg
Combination ratio[2] (g/kg)	Response time: < 10 seconds (from 10 to 80% RH, V_{air} = 2 m/s)	From 0 to 9999.9 g/kg	0.1 g/kg
Pt100 temperature	±0.3% of reading ±0.25 °C Response time: T_{90} = 0.9 second for V_{air} = 1 m/s	Ambient model: from -20 to +80 °C Remote model with polycarbonate probe: from -20 to +80 °C Remote model with stainless steel probe: from -40 to +180 °C	0.1 °C ; 0.1 °F

Class 210 transmitters have two analogue outputs which correspond to both displayed parameters. It is possible to activate one or two outputs and to select for each between humidity, temperature and the calculated parameters (the default configuration for the output 1 is 0-100% RH and 0-50 °C for the output 2).

[1]Available only with the remote probe / [2]Calculated value / [3]All the accuracy indicated in this technical datasheet were stated in laboratory conditions, and can be guaranteed for measurements carried out in the same conditions, or carried out with calibration compensation.

General features

Power supply	TH 210-BXX models: 24 Vac/Vdc ±10% TH 210-HXX models: 100-240 Vac, 50-60 Hz Warning: risk of electric shock
Output	2 x 4-20 mA or 2 x 0-20 mA or 2 x 0-5 V or 2 x 0-10 V (4 wires) Common mode voltage < 30 VAC Maximum load: 500 Ω (0/4-20 mA) Minimum load: 10 kΩ (0-5/10 V)
Relay outputs	2 changeover relays. NO: 5 A/NC: 3 A/240 Vac
Galvanic isolation	Inputs and outputs (models 100-240 Vac) Device fully protected by DOUBLE ISOLATION or REINFORCED ISOLATION Outputs (models 24 Vac/Vdc)
Consumption	TH 210-B: 6 VA/TH 210-H: 8 VA
Electrical connection	Screw terminal block for cable 2.5 mm² Executed following the good practices guidelines.
Type of sensor	Hygrometry: capacitive Temperature: Pt100 1/3 as per IEC 60751 (2008)
Type of fluid	Air and neutral gases
PC communication	USB-Mini Din cable
Environment	Air and neutral gases
Conditions of use (°C/%RH/m)	From -10 to 50 °C. In non-condensing condition. From 0 to 2000 m.
Storage temperature	From -10 to 70 °C
Security	Protection class II. Pollution degree 2 Overvoltage CAT II
European directives	2014/30/EU EMC; 2014/35/EU Low Voltage; 2011/65/EU RoHS II; 2012/19/EU WEEE

• Type of caps

Part numbers	EPP2	EPI25	EPI100	EPFI	EPFT	EPH202
Features	Cap: ABS[1] Filter: meshed, 316 L st. steel 30 mm length	Cap: 316 L stainless steel[2] Filter: meshed, 316 L st. steel 30 mm length	Cap: 316 L stainless steel[2] Filter: meshed, 316 L st. steel 30 mm length	Cap: 316 L stainless steel[2] Filter: sintered, 316 L st. steel 30 mm length	Cap: PTFE[3] Filter: sintered, PTFE 30 mm length	Cap: MnO_2[4] Filter: sintered, PTFE 33 mm length
Max. particle	25µ	25µ	100µ	25µ	10µ	50µ
Max. air velociy	25 m/s	25 m/s	20 m/s	25 m/s	25 m/s	25 m/s
Max. temperature	80 °C	180 °C	180 °C	180 °C	180 °C	180 °C
Relative humidity	95% RH	95% RH	100% RH	90% RH	90% RH	95% RH
APPLICATIONS						
HVAC air-conditioning system	✓	✓				
Cold storage room			✓		✓	
Industry	✓	✓	✓	✓	✓	
Pharma plants / Microelectronics	✓	✓	✓	✓	✓	✓
Dryer				✓	✓	
Curing				✓		
Swimming-pool					✓	

Features of the housing

Material	ABS V0 as per UL94
Protection	IP65
Display	75 x 40 mm, LCD 20 digits 2 lines. Height of digits: Values: 10 mm; Units: 5 mm
Cable gland	For cables Ø 8 mm maximum
Weight	340 g

Dimensions

All dimensions are in millimeters.

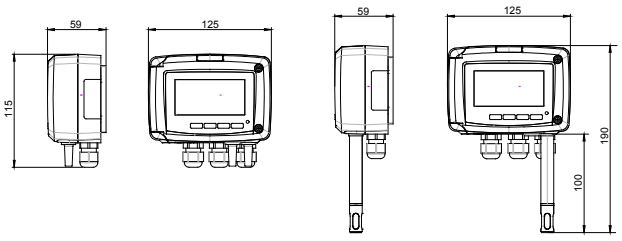

Remote model Ambient model

Technical features of probes

• White polycarbonate probe

Measuring range	From -20 to 80 °C
Dimensions of standard probe	Ø 13 mm, 100 mm length
Dimensions of remote probe	Ø 13 mm, 150 or 300 mm length (other length on request)
Cable	Silicone Ø4.8 mm, length 2 m (other length on request)



Polycarbonate probes are supplied with a flow-through ABS protection tip with a stainless steel filter 25 µ (ref: EPP2).

• 316 L stainless steel probe

Measuring range	From -40 to 180 °C
Dimensions of remote probe	Ø 13 mm, 150 or 300 mm length (other length on request)
Cable	Silicone Ø 4.8 mm, length 2 m (other on request)



Stainless steel probes are supplied with a flow through stainless steel protection tip with a stainless steel filter 25 µ (ref: EPI25).

External aggression

Tips protect against the following external aggressions:

- **Water droplets:** EPFT
- **Shaving:** EPI25 and EPFI
- **Duct:** EPFI
- **Chemical product and grease:** EPFT
- **H_2O_2 (hydrogen peroxide):** EPH2O2

[1] ABS: white acrylonitrile butadiene styrene
[2] Stainless steel: 316 L
[3] PTFE: white Polytetrafluoroethylene
[4] MnO_2: manganese dioxide

Symbols

For your safety and in order to avoid any damage of the device, please follow the procedure described in this document and read carefully the notes preceded by the following symbol:

The following symbol will also be used in this document, please read carefully the information notes indicated after this symbol:

Connections

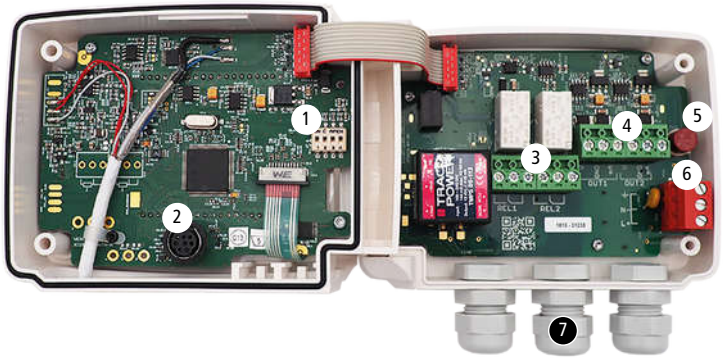

1. DIP switch (d)
2. LCC-S software connection
3. Relays
4. Analogue outputs (a)
5. F3.20* fuse
6. Power supply terminal block (c)
7. Cable glands

Power supply type (b) specified on the label on the side of the transmitter

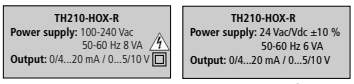

100-240 Vac | 24 Vac/Vdc

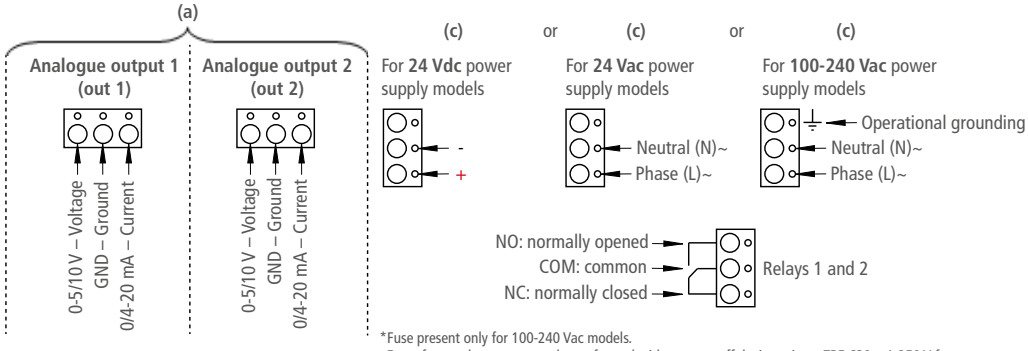

*Fuse present only for 100-240 Vac models.
Every fuse replacement must be performed with a power off device using a TR5 630 mA 250 V fuse.

Electrical connections as per NFC15-100 standard

This connection must be made by a formed and qualified technician. To make the connection, the transmitter must not be energized. Before making the connection, you must first check the power supply indicated on the transmitter board (see (b) in "Connections" part). The presence of a switch and a circuit breaker upstream the device is compulsory

- For transmitters with 24 Vdc power supply:

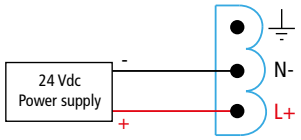

- For transmitters with 24 Vac power supply:

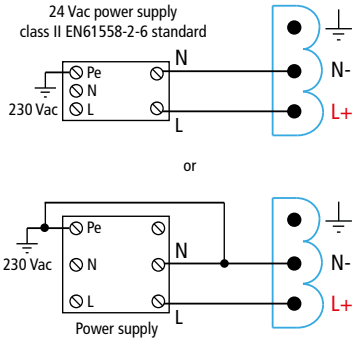

- For transmitters with 100-240 Vac power supply:

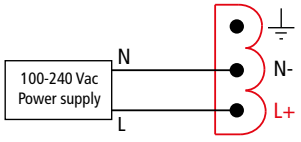

The selection of the output signal in voltage (0-10 V or 0-5 V) or in current (4-20 mA or 0-20 mA) is made via the DIP switch (d) of the electronic board of the transmitter: put the on-of switches as shown in the table below:

Configurations	4-20 mA	0-10 V	0-5 V	0-20 mA
Combinations				

- Connection of the output in current 4-20 mA:

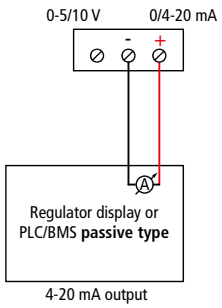

- Connection of output in voltage 0-10 V:

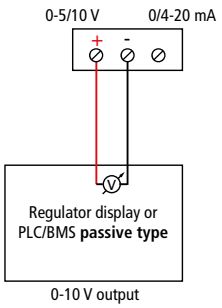

On 100-240 Vac models, if a fuse protection is used for the power line, it is imperative to use delayed-action fuses in order to absorb the surge of current when first turned on the transmitter.

Transmitters configuration

It is possible on the class 210 to configure all the parameters of the transmitter: units, measuring ranges, outputs, channels, calculation functions, etc. via different methods:

- **Keypad for models with display:** a code-locking system allows to secure the installation (See class 210 transmitters user manual).
- **Software (optional) on all models.** Simple user-friendly configuration. See LCC-S user manual.

Configurable analogue output:
Range with center zero (-40/0/+40 °C), with offset zero (-30/0/+70 °C) or standard range (0/+100 °C). It is possible to configure your own intermediary ranges

Caution: the minimum difference between the high range and the low range is 20.

Configure the range according to your needs: outputs are automatically adjusted to the new measuring range

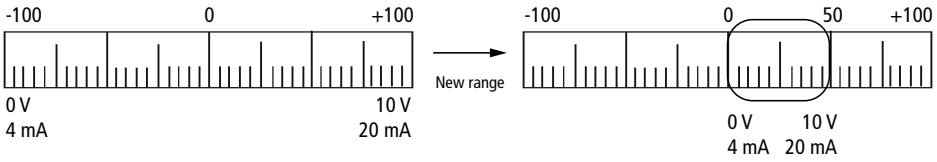

Calibration

Outputs diagnostic: With this function, you can check with a multimeter (or on a regulator / display, or a PLC / BMS) if the transmitter outputs work properly. The transmitter generates a voltage of 0 V, 5 V and 10 V or a current of 4 mA, 12 mA and 20 mA

Certificate: Class 210 transmitters are supplied with adjusting certificates. Calibration certificates are available as an option.

Mounting

To mount the transmitter, mount the ABS plate on the wall (drilling: Ø 6 mm, screws and pins are supplied).
Insert the transmitter on the fixing plate (see A on the drawing beside).
Rotate the housing in clockwise direction until you hear a "click" which confirms that the transmitter is correctly installed.

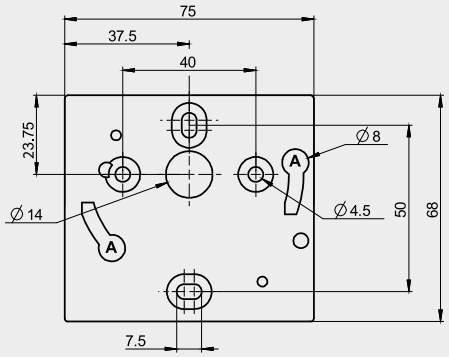

Dimensions are in millimeters.

Maintenance:

- Avoid any aggressive solvent.
- Protect the transmitter and its probes from any cleaning product containing formalin, that may be used for cleaning rooms or ducts.

Precautions for use: always use the device in accordance with its intended use and within parameters described in the technical features in order not to compromise the protection ensured by the device.

Options and accessories

Name	Reference
Configuration software with USB cable	LCC-S
Calibration certificate	
Sliding fittings	
Connection fittings	
Cable glands	
Protections tips	
Wall-mounting support bracket for remote humidity probe	

Only the accessories supplied with the device must be used.

Warranty

Instruments have 1-year guarantee for any manufacturing defect.

FT_EN – TH210-R – 20/04/2021 – Non-contractual document – We reserve the right to modify the characteristics of our products without prior notice.