# DATASHEET - DIULM17/21(110V50HZ,120V60HZ)

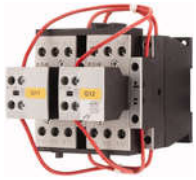

**Reversing contactor combination, 380 V 400 V: 7.5 kW, 110 V 50 Hz, 120 V 60 Hz, AC operation**

| | |
|---|---|
| **Part no.** | **DIULM17/21(110V50HZ,120V60HZ)** |
| **Catalog No.** | **278133** |
| **Alternate Catalog No.** | **XTCR018C21A** |

## Delivery program

| | | | |
|---|---|---|---|
| Product range | | | Contactor combinations |
| Application | | | Contactor combinations for starting motors with two directions of rotation |
| Accessories | | | DIUL reversing combinations |
| Utilization category | | | NAC-3: Normal AC induction motors: starting, switch off during running<br>AC-4: Normal AC induction motors: starting, plugging, reversing, inching |
| | | | IE3 |
| Notes | | | Also suitable for motors with efficiency class IE3. |
| **Rated operational current** | | | |
| AC-3 | | | |
| 380 V 400 V | $I_e$ | A | 18 |
| **Max. rating for three-phase motors, 50 - 60 Hz** | | | |
| AC-3 | | | |
| 220 V 230 V | P | kW | 5 |
| 380 V 400 V | P | kW | 7.5 |
| 660 V 690 V | P | kW | 11 |
| AC-4 | | | |
| 220 V 230 V | P | kW | 2.5 |
| 380 V 400 V | P | kW | 4.5 |
| 660 V 690 V | P | kW | 6.5 |
| Actuating voltage | | | 110 V 50 Hz, 120 V 60 Hz |
| Voltage AC/DC | | | AC operation |
| Individual components of the combination | | | |
| Contactor Q11 DILM17-01<br>+ DILA-XHI20 | | | |
| Contactor Q12 DILM17-01<br>+ DILA-XHI20 | | | |
| Spare auxiliary contacts | | | |

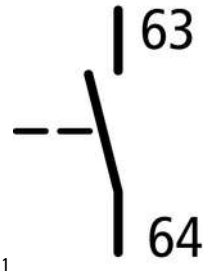


Q11

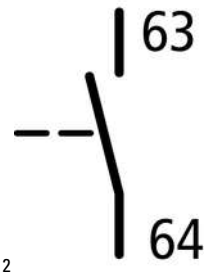


Q12

| | | | |
|---|---|---|---|
| Mechanical interlock + | | | |
| Circuit diagram | | | |

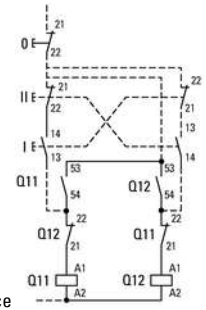

Contact sequence

## Design verification as per IEC/EN 61439

| | | | |
|---|---|---|---|
| Technical data for design verification | | | |
| Rated operational current for specified heat dissipation | $I_n$ | A | 17 |
| Heat dissipation per pole, current-dependent | $P_{vid}$ | W | 0.8 |
| Equipment heat dissipation, current-dependent | $P_{vid}$ | W | 2.5 |
| Static heat dissipation, non-current-dependent | $P_{vs}$ | W | 2.1 |
| Heat dissipation capacity | $P_{diss}$ | W | 0 |
| Operating ambient temperature min. | | °C | -25 |
| Operating ambient temperature max. | | °C | 60 |
| IEC/EN 61439 design verification | | | |
| 10.2 Strength of materials and parts | | | |
| 10.2.2 Corrosion resistance | | | Meets the product standard's requirements. |
| 10.2.3.1 Verification of thermal stability of enclosures | | | Meets the product standard's requirements. |
| 10.2.3.2 Verification of resistance of insulating materials to normal heat | | | Meets the product standard's requirements. |
| 10.2.3.3 Verification of resistance of insulating materials to abnormal heat and fire due to internal electric effects | | | Meets the product standard's requirements. |
| 10.2.4 Resistance to ultra-violet (UV) radiation | | | Meets the product standard's requirements. |
| 10.2.5 Lifting | | | Does not apply, since the entire switchgear needs to be evaluated. |
| 10.2.6 Mechanical impact | | | Does not apply, since the entire switchgear needs to be evaluated. |
| 10.2.7 Inscriptions | | | Meets the product standard's requirements. |
| 10.3 Degree of protection of ASSEMBLIES | | | Does not apply, since the entire switchgear needs to be evaluated. |
| 10.4 Clearances and creepage distances | | | Meets the product standard's requirements. |
| 10.5 Protection against electric shock | | | Does not apply, since the entire switchgear needs to be evaluated. |
| 10.6 Incorporation of switching devices and components | | | Does not apply, since the entire switchgear needs to be evaluated. |
| 10.7 Internal electrical circuits and connections | | | Is the panel builder's responsibility. |
| 10.8 Connections for external conductors | | | Is the panel builder's responsibility. |
| 10.9 Insulation properties | | | |
| 10.9.2 Power-frequency electric strength | | | Is the panel builder's responsibility. |
| 10.9.3 Impulse withstand voltage | | | Is the panel builder's responsibility. |
| 10.9.4 Testing of enclosures made of insulating material | | | Is the panel builder's responsibility. |
| 10.10 Temperature rise | | | The panel builder is responsible for the temperature rise calculation. Eaton will provide heat dissipation data for the devices. |
| 10.11 Short-circuit rating | | | Is the panel builder's responsibility. The specifications for the switchgear must be observed. |
| 10.12 Electromagnetic compatibility | | | Is the panel builder's responsibility. The specifications for the switchgear must be observed. |
| 10.13 Mechanical function | | | The device meets the requirements, provided the information in the instruction leaflet (IL) is observed. |

## Technical data ETIM 8.0

| | | | |
|---|---|---|---|
| Low-voltage industrial components (EG000017) / Combination of contactors (EC000010) | | | |
| Electric engineering, automation, process control engineering / Low-voltage switch technology / Contactor (LV) / Combination of contactor (ecl@ss10.0.1-27-37-10-09 [AGZ572014]) | | | |
| Function | | | Reversing contactor |
| Rated control supply voltage Us at AC 50HZ | | V | 110 - 110 |
| Rated control supply voltage Us at AC 60HZ | | V | 120 - 120 |
| Rated control supply voltage Us at DC | | V | 0 - 0 |
| Voltage type for actuating | | | AC |

| | | | |
|---|---|---|---|
| Rated operation current Ie at AC-1, 400 V | | A | 18 |
| Rated operation current Ie at AC-3, 400 V | | A | 18 |
| Rated operation power at AC-3, 400 V | | kW | 7.5 |
| Rated operation power NEMA | | kW | 7.4 |
| Number of normally closed contacts as main contact | | | 0 |
| Number of normally open contacts as main contact | | | 6 |
| Type of electrical connection for auxiliary- and control current circuit | | | Screw connection |
| Type of electrical connection of main circuit | | | Screw connection |
| Degree of protection (IP) | | | IP00 |
| Degree of protection (NEMA) | | | Other |
| Rail mounting possible | | | Yes |

## Approvals

| | | | |
|---|---|---|---|
| Product Standards | | | IEC/EN 60947-4-1; UL 60947-4-1; CSA - C22.2 No. 60947-4-1-14; CE marking |
| UL File No. | | | E29096 |
| UL Category Control No. | | | NLDX |
| CSA File No. | | | 012528 |
| CSA Class No. | | | 2411-03, 3211-04 |
| North America Certification | | | UL listed, CSA certified |
| Specially designed for North America | | | No |

## Characteristics

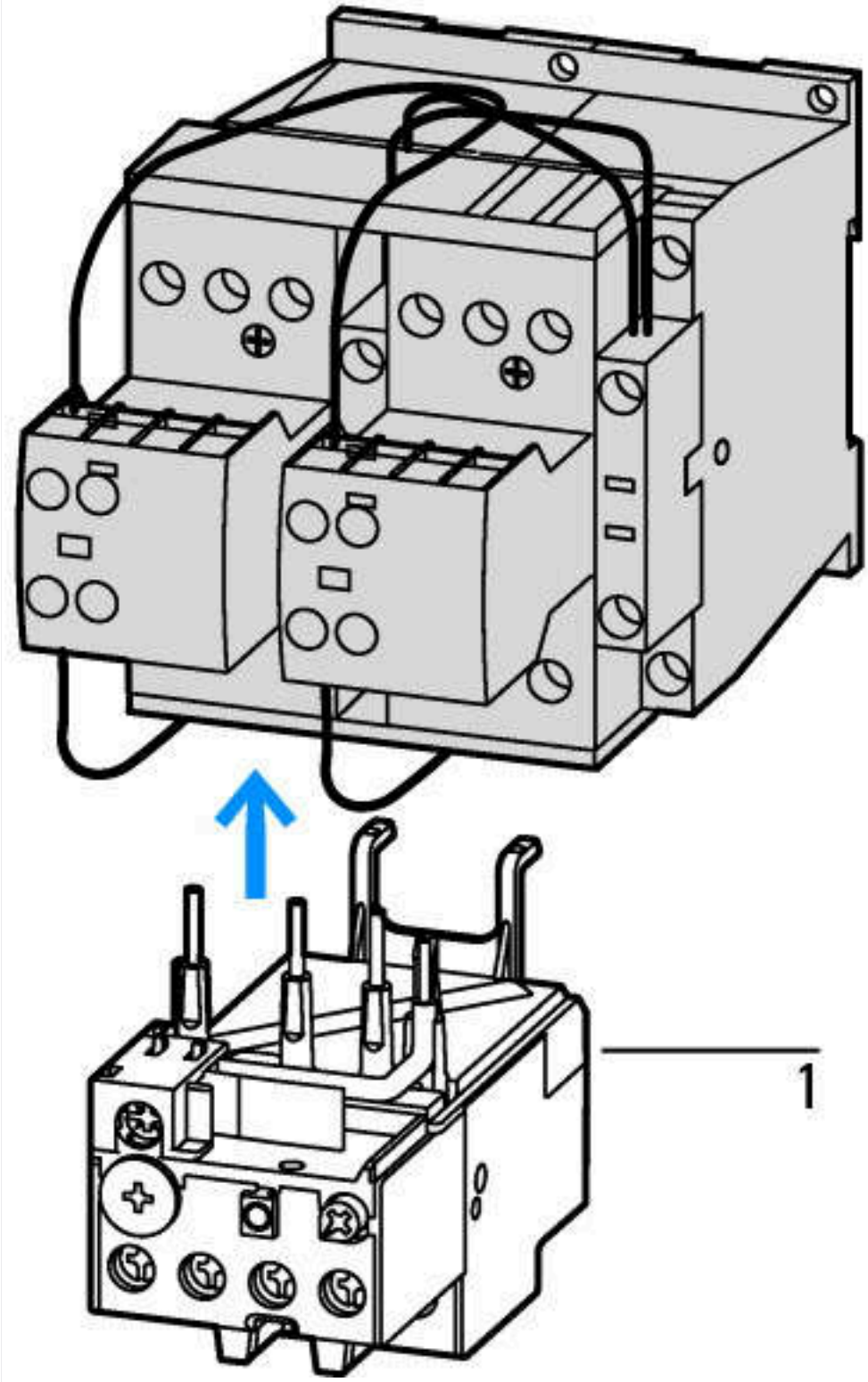


1: Overload relay

## Dimensions

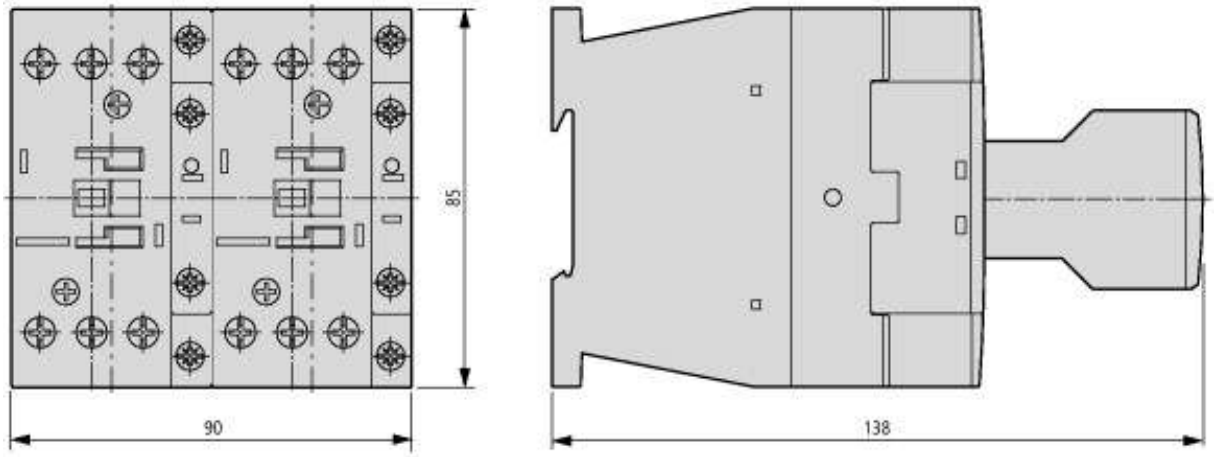


Basic unit with auxiliary contact module

## Additional product information (links)

| **IL03407030Z (AWA2100-2139) Wiring for contactor combinations** | |
|---|---|
| IL03407030Z (AWA2100-2139) Wiring for contactor combinations | https://es-assets.eaton.com/DOCUMENTATION/AWA_INSTRUCTIONS/IL03407030Z2021_08.pdf |


© 07/2022 by Eaton Industries GmbH