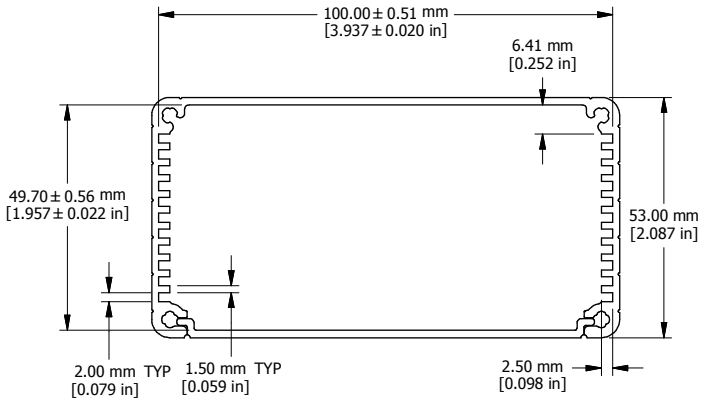


EXTRUSION

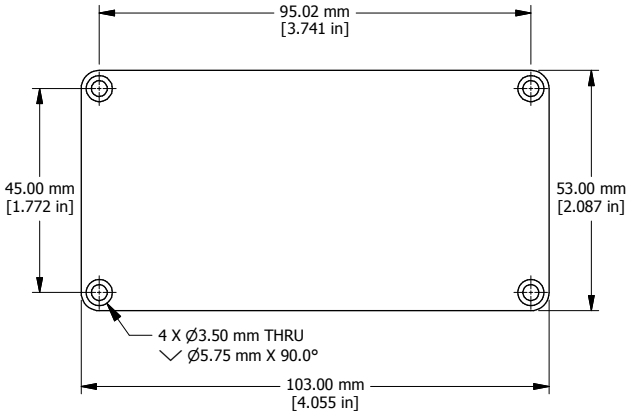


END PLATE

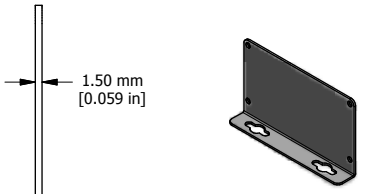


OPTIONAL FLANGE END PANELS
1455NF

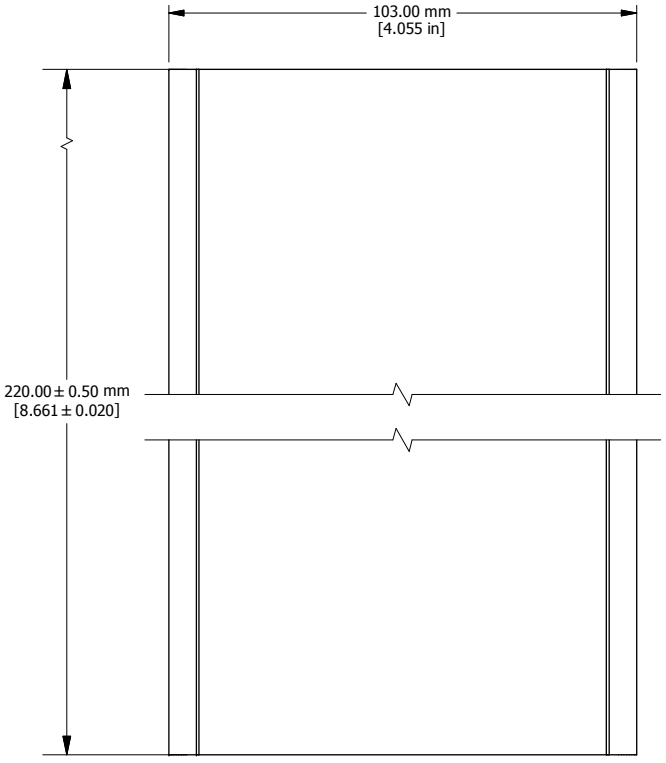


EXTRUSION DESIGNED FOR 100MM WIDE PC BOARD

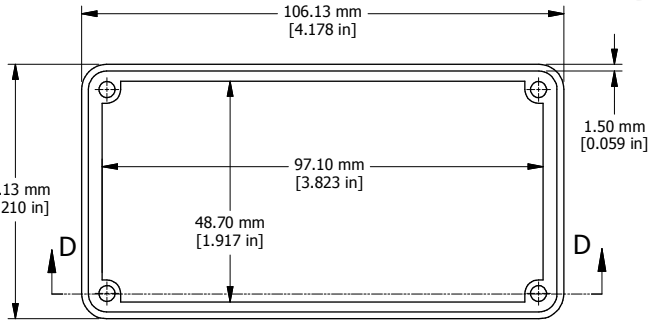


OPEN BEZEL

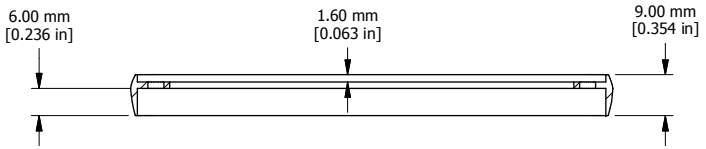


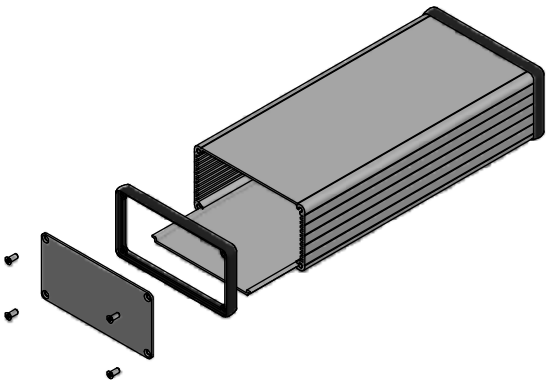

EXPLODED ASSEMBLY VIEW

Enclosures can be Factory Modified ( Milling, Drilling, Printing etc. )
Solid models of this enclosure available in STEP or IGES.
Contact Factory mjm@hammondmfg.com

| NOTE |
|---|
| Purchased assembly includes box, plastic bezels, end panels, #6 Taptight screws and self adhesive rubber feet. |
| Box made from Extruded Aluminum 6063. |
| Bezels made with polycarbonate. |

| 1455N2201 | |
|---|---|
| **PART NUMBERS** | |
| Clear Anodized | 1455N2201 |
| Black Anodized | 1455N2201BK |
| Blue Anodized | 1455N2201BU |
| Red Anodized | 1455N2201RD |
| **ACCESSORIES** | |
| See website for accessories. | |

HAMMOND MANUFACTURING™

1455N2201

www.hammondmfg.com