

EXTRUSION

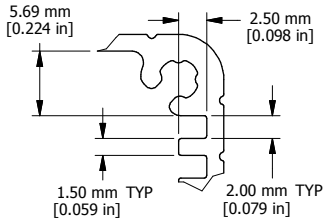

DETAIL A

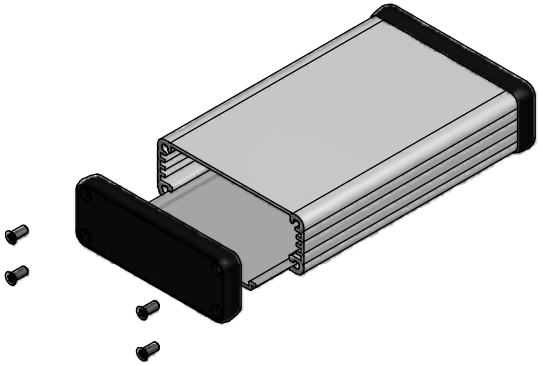

EXPLODED ASSEMBLY VIEW

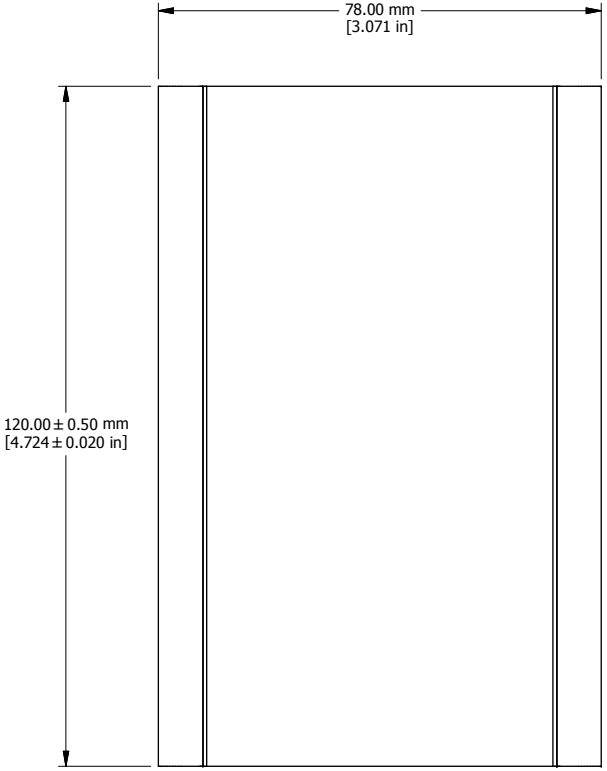

EXTRUSION DESIGNED FOR 75MM WIDE PC BOARD

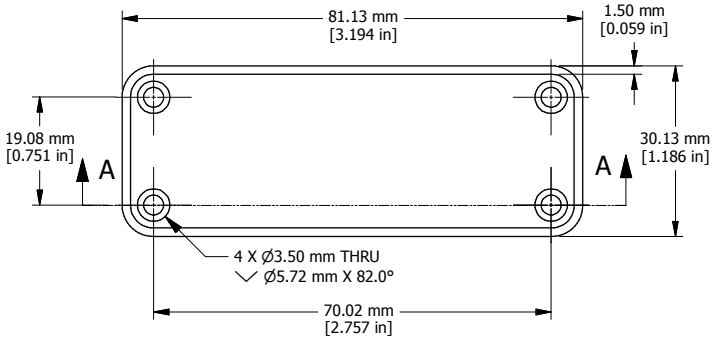

CLOSED BEZEL

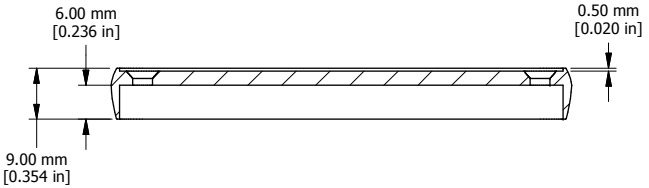

Enclosures can be Factory Modified (Milling, Drilling, Printing etc.)
Solid models of this enclosure available in STEP or IGES.
Contact Factory mjm@hammondmfg.com

NOTE
Purchased assembly includes box, plastic bezels, #6 Taptight screws and self adhesive rubber feet.
Box made from Extruded Aluminum 6063.
Bezels made with ABS

1455J1202	
PART NUMBERS	
Clear Anodized	1455J1202
Black Anodized	1455J1202BK
ACCESSORIES	
See website for accessories.	

HAMMOND MANUFACTURING™

1455J1202

www.hammondmfg.com