

Dimensions

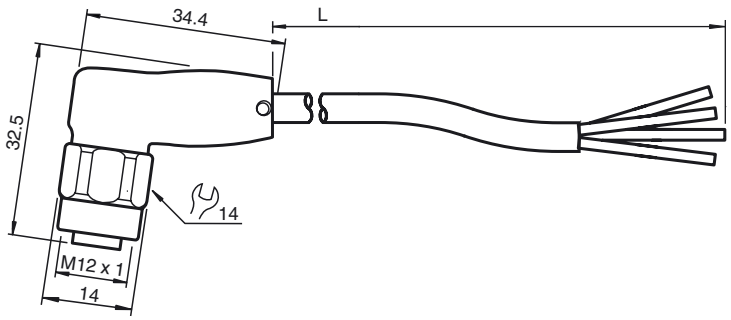

Model Number

V1-WV4A-2M-PP-W1

Single-ended female cordset, M12, V4A stainless steel, wash-down design, 4-pin, PP cable

Features

- Suitable for applications in the splash area in the food and beverage industry
- Certified by ECOLAB
- Resistant to all common acid and alkaline cleaning products and disinfectants
- Degree of protection IP67 / IP68 / IP69
- Suitable for drag chains
- Halogen-free (PVC-free)
- Materials used compliant with FDA

Technical data

General specifications		
Number of pins		4
Electrical specifications		
Operating voltage	U_B	max. 250 V AC/DC
Operating current	I_B	max. 4 A
Ambient conditions		
Ambient temperature		cable, flexing: -25 ... 105 °C (-13 ... 221 °F) cable, fixed: -40 ... 105 °C (-40 ... 221 °F)
Pollution degree		3
Mechanical specifications		
Contact elements		spring-loaded contact socket
Degree of protection		IP67 / IP68 / IP69
Material		
Contacts		CuSn
Contact surface		Ni/Au
Body		PP
Cable		PP-EPDM
Slotted nut		stainless steel V4A
Seal		FKM
Core insulation		PP
Temperature resistance		Cold bending-resistant and cold impact-resistant up to -40 °C (-40 °F)
Cable		extra-fine wire, flexible
Sheath diameter		Ø 4.7 mm
Bending radius		> 10 x cable diameter, moving > 5 x cable diameter, fixed
Color		grey
Cores		4 x 0.34 mm^2
Conductor construction		42 x 0.1 mm Ø
Length	L	2 m
Drag chain suitability		
Drag chain cycles		≥ 4000000
Motion velocity		≤ 3 m/s
Traverse distance		10 m
Acceleration		≤ 10 m/s^2
Torsion cycles		≥ 4000000
Torsional stress		± 270 °/m
Tightening torque, cable gland		0.4 ... 0.6 Nm
Mating cycles		≥ 100
Compliance with standards and directives		
Standard conformity		
Degree of protection		EN 60529
Standards		IEC 61076-2-101

Electrical connection

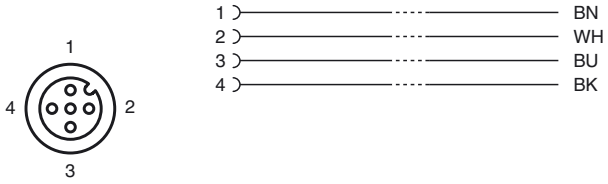

Release date: 2017-09-27 10:06 Date of issue: 2017-11-23 294465_eng.xml

Halogen-free	IEC 60754-1
Temperature resistance	DIN EN 60811-1-4
Material	FDA-compliant in accordance with FDA 21 CFR 177.2600

Release date: 2017-09-27 10:06 Date of issue: 2017-11-23 294465_eng.xml

Refer to “General Notes Relating to Pepperl+Fuchs Product Information”.
Pepperl+Fuchs Group www.pepperl-fuchs.com
USA: +1 330 486 0001 fa-info@us.pepperl-fuchs.com
Germany: +49 621 776 4411 fa-info@de.pepperl-fuchs.com
Singapore: +65 6779 9091 fa-info@sg.pepperl-fuchs.com
PEPPERL+FUCHS SENSING YOUR NEEDS