8LB6BP08

FIXING BASE FOR SOUND MODULES. Ø62MM, FOR EXTENSION CONNECTION, PLASTIC, BLACK COLOUR



Product designation		Fixing bases for light and sound signal beacons Ø62mm/2.44"
Product type designation		8LB6BP08
General characteristics		
Diameter	mm - inch	62 / 2.44
Colour		Black
Material		Plastic
Mechanical features		
Weight	g	20
Dimensions		

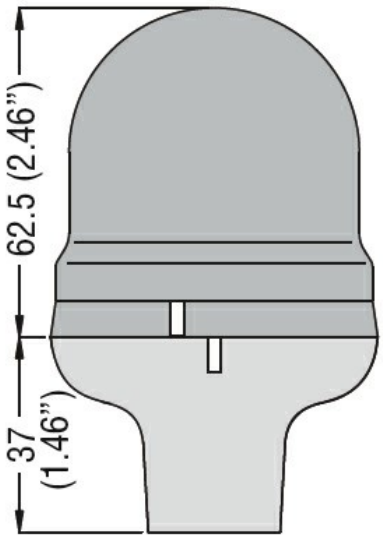

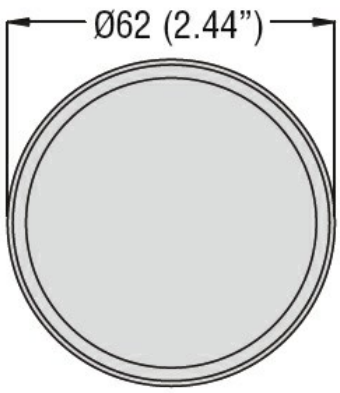

Certifications and compliance

Compliance

The characteristics described in this document are subject to updates or modifications at any time. The descriptions, technical and functional information, illustrations and instructions in this brochure are purely illustrative, and are consequently not contractually binding

/

Certificates

/

ETIM classification

ETIM 8.0	EC001154 - Stand for signal tower without tube

The characteristics described in this document are subject to updates or modifications at any time. The descriptions, technical and functional information, illustrations and instructions in this brochure are purely illustrative, and are consequently not contractually binding